ADDENDA

GENERAL

1.01 The following sets forth the format for issued Addenda.

ADDENDUM NO. 1 dated 2/19/2026.

RE: VOLUNTARY BARRIER REMOVAL
OWNER PROJECT NO.: 10373370
AT
BASSETT ELEMENTARY SCHOOL
located at 15756 Bassett St., Lake Balboa, CA 91406

FROM: OWNER: LOS ANGELES UNIFIED SCHOOL DISTRICT
FACILITIES CONSTRUCTION CONTRACTS
333 S. Beaudry Ave., 28th Fl.
Los Angeles, CA 90017

TO: ALL PROSPECTIVE BIDDERS:

This Addendum forms a part of the Contract Documents and modifies the Bidding Documents dated February, 2026, as noted below. Acknowledge receipt of the Addendum in the space provided on Document 00 4100 - Bid and Acceptance Form. Failure to do so may result in the bid being deemed non-responsive.

The Addendum consists of 439 pages.

A. CHANGES TO BIDDING DOCUMENTS:

Remove and Replace Table of Contents Sheet 01 0110 (06 pages)

B. CHANGES TO SPECIFICATIONS:

Add the following specs to section 02 2600 Abatement of Hazardous Materials:

RTA Form for Various Buildings – 7 pages
RTA Form for Asphalt testing – 8 pages
Phase 1 Report Various Buildings – 286 pages
Phase 2 Report Various Buildings - 29 pages
Rule 1466 Soil Determination Report - 102 pages

C. CHANGES TO DRAWINGS: N/A

D. OTHER CHANGES AS SET FORTH: N/A

E. Clarification or any other notice of a change in the Bidding Documents will be issued only by the OWNER office of Facilities Construction Contracts and only in the form of a written Addendum, transmitted by fax or e-mail to all who are known by the issuing office to have received a complete set of Bidding Documents. Any other purported Addenda are void and unenforceable.

END OF ADDENDUM NO. 1

TABLE OF CONTENTS

DIVISION 00 - PROCUREMENT AND CONTRACTING REQUIREMENTS ..... Number of Pages

00 0101 Project Title Page 03

00 0110 Table of Contents. 05

00 1116 Invitation to Bid 04

00 2113 Instructions to Bidders 08

Procurement Job Aid 09

00 2513 Pre-Bid Meeting (Mandatory) 01

00 3000 Available Information 02

00 3126 OWNER'S List of Pre-qualified Asbestos Abatement Subcontractors 01

00 3148 Project Directory 04

00 4001 Required Bid Forms 01

00 4100 Bid and Acceptance Form 05

Addendum of Provisions Required of Federally Funded Contracts - FEMA Awards 15

Internal Revenue Code Section 179D Allocation Statement 01

Sample 179D Assumptions and Calculations 01

00 4313 Bid Security Form 01

00 4336 Subletting and Subcontracting Fair Practices Act List 01

00 4340 Disabled Veteran Business Enterprises (DVBE) School Facilities Program 01

00 4500 Certification Requirements 05

00 4519 Non-Collusion Affidavit 01

00 6113 Payment Bond (Labor and Material) 01

00 6114 Performance Bond. 03

00 6217 Certificate of Insurance for Hazardous Materials 01

00 7000 General Conditions 97

00 7300 Supplementary Conditions 05

00 7316 Owner Controlled Insurance Program (OCIP) 188

00 7339 Small Business Enterprise (SBE) School Facilities Program 01

00 7349 Project Stabilization Agreement (PSA)..... 63

00 9110 Pre-Bid Clarification. 01

00 9113 Addendum No. 1. 439

DIVISION 01 - GENERAL REQUIREMENTS

01 1100 Summary of the Work 05

01 1216 Phasing of the Work 03

01 1219 Phasing of the Work Appendix A 04

01 2513 Product Procedures for Substitutions "or Equal" 03
01 2613 Request for Clarification 02
01 2973 Schedule of Values 03
01 2976 Progress Payment Procedures 04
01 3113 Project Coordination 05
01 3119 Project Meetings 06
01 3213 Construction Schedule 20
01 3229 Project Forms 07
Forms 106
01 3300 Submittal Procedures 09
01 3546 Indoor Quality Air Procedures 10
01 4213 Abbreviations, Symbols and Acronyms 12
01 4523 Testing and Inspection 11
01 4524 Environmental Import/Export Material Testing 16
01 5000 Construction Facilities and Temporary Controls 17
01 6000 Product Requirements 06
01 7123 Field Engineering 06
01 7329 Cutting and Patching 07
01 7418 Water Pollution Control 04
01 7419 Construction & Demolition Waste Management 04
01 7700 Contract Closeout 07
01 7836 Warranties 03
01 7900 Maintenance & Operations Staff Demonstration and Training 11

DIVISION 02 - EXISTING CONDITIONS
02 2600 Abatement of Hazardous Materials 04
RTA Form – Various Buildings 07
RTA Form – Asphalt Testing 08
Phase I Report – Various Buildings 286
Phase II Report – Various Buildings 29
Rule 1466 – Soil Sampling Determination 102
02 4116 Demolition 04
02 8213 Asbestos Abatement & Asbestos Related Disturbance 30
02 8216 Asbestos Abatement of Non-Friable Floor Tile 17
02 8223 Removal of Asbestos Containing Asphalt 10
02 8333 Lead Abatement and Lead Related Construction Work 85
02 8400 Polychlorinated Biphenyl (PCB) Remediation 31

DIVISION 03 - CONCRETE

03 1000 Concrete Forming Accessories 08
03 2000 Concrete Reinforcing 07
03 3000 Cast-In-Place Concrete 25

DIVISION 05 - METALS

05 0513 Hot-Dip Galvanizing 06
05 5000 Metal Fabrications 09
05 5100 Metal Stairs and Railings 11

DIVISION 06 - WOOD, PLASTICS, AND COMPOSITES

06 1000 Rough Carpentry 10
06 2000 Finish Carpentry 04
06 4000 Architectural Woodwork 10

DIVISION 07 - THERMAL AND MOISTURE PROTECTION

07 0150 Roof Repair 03
07 0800 Commissioning of Thermal and Moisture Protection 04
07 1326 Self-Adhering Sheet Waterproofing 06
07 2100 Thermal Insulation 05
07 2600 Vapor Barriers 04
07 2719 Plastic Sheet Air Barriers 06
07 6000 Flashing and Sheet Metal 06
07 8413 Penetration Firestopping 09
07 9200 Joint Sealants 08

DIVISION 08 - OPENINGS

08 1113 Hollow Metal Doors and Frames 13
08 1416 Flush Wood Doors 07
08 3116 Access Panels and Frames 03
08 3313 Coiling Counter Doors 03
08 5619 Pass-Thru Windows 07
08 7100 Door Hardware 38
08 8000 Glazing 08

DIVISION 09 - FINISHES

09 0561 Moisture Testing for Flooring Installation 06
09 2423 Cement Plaster and Metal Lath 12
09 2900 Gypsum Board 08

09 3013 Ceramic Tiling 12
09 5113 Acoustical Panel Ceilings 04
09 6429 Wood Strip Flooring 05
09 6513 Rubber Base 04
09 6519 Vinyl Composition Tile 07
09 8100 Acoustical Insulation 03
09 9000 Painting and Coating 09
09 9013 Painting of Existing Facilities 26

DIVISION 10 - SPECIALTIES
10 1400 Signage 10
10 2123 Cubicle and Shower Curtains 03
10 2813 Toilet Accessories 06
10 4413 Fire Extinguishers and Cabinets 05

DIVISION 12 – FURNISHINGS AND ACCESSORIES
12 6100 Fixed Audience Seating 07

DIVISION 14 - CONVEYING EQUIPMENT
14 4219 Vertical Wheelchair Lifts Surface Installed 09

DIVISION 22 – PLUMBING
22 0500 Common Work Results for Plumbing 10
22 0513 Basic Plumbing Materials and Methods 26
22 0553 Plumbing Identification 05
22 0700 Plumbing Insulation 08
22 1000 Plumbing 29

DIVISION 23 - HEATING, VENTILATING, AND AIR CONDITIONING
23 0130 HVAC Duct Cleaning 08
23 0500 Common Work Results for HVAC 13
23 0513 Basic HVAC Materials and Methods 17
23 0548 HVAC Sound, Vibration and Seismic Control 12
23 0553 HVAC Identification 05
23 0800 HVAC Systems Commissioning 08
23 0813 Environmental Controls and Energy Management Systems Commissioning 12
23 0923 Environmental Controls and Energy Management Systems 25
23 3000 Air Distribution 20
23 7000 Air Handling Units 11

23 8000 Heating, Ventilating and Air Conditioning Equipment 10

DIVISION 26 - ELECTRICAL
26 0500 Common Work Results for Electrical 07
26 0513 Basic Electrical Materials and Methods 18
26 0519 Low-Voltage Wires (600 Volt AC) 07
26 0526 Grounding and Bonding 05
26 0533 Raceways and Boxes Fitting and Supports 13
26 0586 Motors and Drives 05
26 5010 Solid State (LED) Lighting 28

DIVISION 28 – ELECTRONIC SAFETY AND SECURITY
28 3100 Fire Detection and Alarm 26

DIVISION 31 – EARTHWORK
31 1000 Site Clearing 02
31 2200 Grading 03
31 2313 Excavation and Fill 09
31 2316 Excavation and Fill for Paving 06
31 2319 Excavation and Fill for Structures 07
31 2323 Excavation and Fill for Utilities 06
31 2326 Base Course 03

DIVISION 32 – EXTERIOR IMPROVEMENTS
32 0113 Rolled Slurry Seal, Existing Pavement 02
32 0117 Pavement Repair 04
32 1216 Asphalt Paving 05
32 1236 Seal for Bituminous Surfacing 03
32 1313 Site Concrete Work 03
32 1713 Precast Concrete Parking Bumpers 02
32 1723 Pavement Markings 03
32 1726 Detectable Warning Surfacing 08
32 1817 Engineered Wood Fiber 07
32 1819 Solar Reflective Pavement Coating 05
32 1828 Decomposed Granite Surfacing for Outdoor Learning Environments 04
32 3113 Chain Link Fences and Gates 12
32 3119 Ornamental Fences and Gates 07
32 8413 Potable Water Irrigation 17
32 8416 Irrigation Controls 06

32 9000 Planting 18

DIVISION 33 – UTILITIES

33 4000 Storm Drainage Utilities 11

END OF TABLE OF CONTENTS

Los Angeles Unified School District

Facilities Environmental Technical Unit

APPROVAL FOR REQUEST TO ADVERTISE

Approval Date: **April 9, 2025** **Approval Expiration Date:** **April 9, 2026**

Site Name: Bassett Elementary School **Site Code:** 2323

Project Description: ADA Improvements Project

Project Manager: Monica Kamin, Design Manager

Work Order Number: 38906627 **Colin Project Number:** 10373370

Condition of Approval*:

Asbestos

- ☐ Not Applicable
- ☐ No asbestos impacted by project scope
- ☐ Asbestos impacted has been abated
- ☐ Abatement will be completed by : _____
- ☐ Disturbance by properly trained personnel as per subpart 1.08, Section 02 8213 [1]
- ☑ Requires approved abatement subcontractor

Lead

- ☐ Not applicable
- ☐ No lead impacted by project scope
- ☐ Lead impacted has been removed
- ☐ Remediation will be completed by: _____
- ☑ Disturbance by properly trained personnel as per subpart 1.09,Section 02 8333 [2]
  Distribute the Lead "Right to Renovate" pamphlet to Site Adminstrator for distribution to parent/guardians of children under the age of six within 60 days of the renovation start date.
- ☐ Requires approved remediation subcontractor

Comments:

THIS IS THE UPDATED RTA. NO CHANGE IN SCOPE OF WORK PER REQUESTOR.
Refer to Assessment Report (Phase 1) and Abatement Work plan (Phase 2) dated July 22nd, 2024 from CNS consultant for reference.
If scope change or additional suspect materials encountered, stop work and contact FETU immediately.

FETU Approver Name: Jennie Tran OEHS Final Approval 04/10/2025

FETU Approver Title: Sr. Asbestos Abatement Worker

FETU Approver Signature:

* If you must disturb or impact any building material and/or access locations (i.e. attic, crawl, ceiling spaces, etc.) not specified in this scope of work, you must consult the Asbestos Management Plan book located in the school Main Office and contact FETU immediately. DO NOT proceed work without FETU's authorization.

[1] Asbestos: All asbestos related disturbances shall be performed in compliance with LAUSD specification, Section 02 8213, "Asbestos Abatement and Asbestos Related Disturbance"

[2] Lead: All work shall be performed in compliance with LAUSD specification, Section 02 8333, "Lead Abatement and Lead Related Work". Lead-renovation, repair and painting projects (Lead RRP) that disturb painted, varnished, and/or glazed surfaces require special handling, and environmental monitoring. Both firms and individuals must be lead-safe certified. This is regardless of the building or structure's construction date.

REQUEST FOR ASSISTANCE FORM

FACILITIES ENVIRONMENTAL TECHNICAL UNIT

Request for (Please select):

- [x] Environmental Assessment (Phase 1) & Abatement Design (Phase 2)
- [ ] Environmental Project Monitoring (Phase 3)
- [ ] Water Intrusion/Mold Remediation
- [x] Asbestos Assistance
- [ ] Insulation
- [ ] Other: Buildings- This RFA is for an extension to the current approved RTA which is set to Expire 7/26/25

Section 1 - General Information *(complete this section for all request types):*

Date: 4/4/2025	Requestor Office: Asset Management	
Requestor Name: Monica Kamin	Title: Design Manager	
Phone No: 213-241-8065	Email: cp-monica.kamin@lausd.net	Site Reg/Dist: West
Site Name: Bassett Elementary School		Site Code: 13676

Building Name & Number (e.g., Administrative Building (001CDG)), Specific Location (e.g., Room #1):
Phase I and II assessment for determination for ADA improvement project scope including asbestos and lead in the following buildings: Main bldg, Bldg.A, Bldg. B, Bldg C, Bldg D, Multi-Purpose bldg., Kindergarten Bldg., and Bassett ES exterior site

Section 2 - Project & Funding Information *(provide as much project and/or funding information as possible)*

Official Project Name: Bassett ES - ADA Improvements

Cost Ctr or WBS Project #	Func. Area	GL Acct	Colin Project #	Funding Source
			10373370	Measure-R

Section 3 - Phase 1 & 2 Request Information* *(Note: Failure to attach a scope or drawings may delay assessment)*

Written scope attached? Yes	Scope % Complete: 100 %	DSA drawings attached? No	Drawing % Complete: 100 %
Phase 1 & 2 supplemental form attached? No	Project Pre-Bid Meeting Date: T.B.D		

Note: *Phase 1 & 2 supplemental form MUST be filled out for ALL phase 1 & 2 requests! See page 2 of this form.

Section 4 - Phase 3 Request Information *(Note: You must attach a copy of FETU approved "Request to Advertise" form)*

WO # on RTA:	RTA Approver Name:

Section5 - Water Intrusion/Mold Remediation, Insulation, or Other Request Information

Describe the Problem:

Section 6 - Asbestos Assistance Request Information

Room/Area Requiring Assistance:		
Asbestos Management Plan has been reviewed? No	Work Order #:	
Bulk sample has been completed on:	Requesting FETU to sample suspect materials? No	
Name Building Material in Question:		Asbestos Present? No
Description of Material(s) to be Abated:		
Quantity of Material to be Abated:	Abatement Type Requested: Removal	
Tentative Start Date of Requestor's Project:	Abatement is required for: Demolition	

FOR FETU USE ONLY

FETU Received Date:	Senior Assigned:	Date Assigned:
Parent WO #	Ph. 1 & 2 WO #: 38906627	Ph. 3 WO #:
Crew I&P WO #:	Crew Removal WO #:	Crew Lab. WO #:
Date Assigned for Samples:	Date Assigned for Abatement:	
Date Requestor Contacted with Bulk Sample Results:	By:	
Date Requestor Notified of Abatement Completion:	By:	

ENVIRONMENTAL ASSESSMENT (PHASE 1) & ABATEMENT DESIGN (PHASE 2) SUPPLEMENTAL FORM

Purpose of Form: This form will assist the Requestor to determine the proper asbestos and lead requirements by identifying the project as a NO, MINIMAL OR MAJOR IMPACT PROJECT. In turn, information the Requestor provides herein will assist FETU to expeditiously process request for no or minimal impact projects that don't necessarily require a Phase 1 Environmental Assessment.

Date: 4/4/2025	**Requestor:** Monica Kamin	**School:** Bassett Elementary School
Official Project Name: Bassett ES - ADA Improvements		

Directions: Based on the project scope of work, please identify if this Project is a No, Minimal or Major Impact Project by checking the corresponding box below. Also, please check the appropriate sub-box(es) under each main category as appropriate and include any other information that substantiates this project, as No, Minimal or Major Impact Project in the COMMENTS section below.

☐ **THIS IS A NO IMPACT PROJECT**

- ☐ This project does not impact any structures/buildings. (*For example, new stand-alone shade structure.)*
- ☐ Materials to be impacted by this project are not coated with paint, varnish, glazing or any other coating, and are not suspect, known or assumed to be asbestos-containing. In addition, this project does not require working in or exposing any ceiling spaces, attics, crawl spaces or other building interstitial areas. *In the COMMENTS section below, identify the material (e.g., unpainted concrete floor, unpainted metal duct, unpainted concrete walls, unpainted brick wall, etc.).*
- ☐ This project includes work in a building(s) but does not impact any coated surfaces or building materials and does not require working in or exposing any ceiling spaces, attics, crawl spaces or other building interstitial areas. *Elaborate in COMMENTS section below. For example, the scope only includes the re-programming of the fire alarm system or only includes new utilities point of connection at existing conduit and pull box at exterior of building.*
- ☐ This project includes excavation.
- ☐ This project does not include excavation.
- ☐ New construction. Construction Date:
- ☐ Other. *Explain in COMMENTS section below.*

☐ **THIS IS A MINIMAL IMPACT PROJECT**

- ☐ This project requires minimal disturbance or removal of building materials and meets the following criteria:
  - Disturbance or removal of building materials, are less or equal to three (3) square feet per impact area.
  - Total quantity of building material impact does not exceed 99 square feet.
  - No ceiling spaces, attics, crawl spaces or other building interstitial areas are required to be worked in or exposed.
- ☐ This project impacts coated surfaces only.
- ☐ This project does not impact coated surfaces.

An example of a project, which may be a minimal impact project, is a fire alarm upgrade project, which only requires coring, installing surface mounted conduits/raceways and replacing existing surface-mounted fire alarm devices.

☐ **THIS IS A MAJOR IMPACT PROJECT**

- ☐ This project requires major impacts to building materials and/or work in ceiling spaces/attics/crawl spaces/other interstitial building areas. Major impacts to building materials are those that are greater than three (3) square feet for any impact area or total quantity of building material to be impacted exceeds 99 square feet total.

☒ **BASED ON THE SCOPE OF WORK, I AM NOT ABLE TO DETERMINE IF THE PROJECT IS A NO, MINIMAL OR MAJOR IMPACT PROJECT**

COMMENTS *(Include supplemental information regarding the scope of this project and/or additional information regarding no, minimal or major impacts to building materials)*

This project upgrades the following facilities to comply with the Americans with Disabilities Act (ADA) and improve program accessibility: This project includes correction, replacement, or installation of one new changing room, one new permanent wheelchair lift, five restroom upgrades, two new concrete ramps, four drinking fountain upgrades, 17 path of travel upgrades, three assembly seating area upgrades, and 69 miscellaneous upgrades.

Tran, Jennie

From: Facilities Environmental Technical Unit <fetu@laschools.org>
Sent: Friday, April 4, 2025 1:32 PM
To: Tran, Jennie
Cc: Galoustian, Greta; Carrier, Damon; Escobar, Noel
Subject: BASSETT ES - PHASE 1 & 2 - UPDATED RTA ADA IMPROVEMENTS
Attachments: FETU RFA_Bassett ES_Ph1 Ph2 Bldg -04.04.25 Extension Request.pdf; Approved RTA_Bassett ES_ADA_7-30-24.pdf

Hello Jennie,

New project - please review request form and/or attachment for completeness and plan as soon as possible.

PH 1 & 2 WO#: 38906627

Thanks,

Cristina

Facilities Environmental Technical Unit (FETU)

Asbestos • Lead • Water Remediation
Mold Cleanup • Insulation • Demolition
M & O Area C3 Main Office Building - 2nd Floor
1240 South Naomi Avenue
Los Angeles, CA 90021
Office: 213 745-1450
Fax: 213 745-1488

---------- Forwarded message ---------
From: **Kamin, Monica** <cp-monica.kamin@lausd.net>
Date: Fri, Apr 4, 2025 at 12:20 PM
Subject: RE: RTAs - Bassett ES - RTA Extension Request
To: Escobar, Noel <noel.escobar@lausd.net>
Cc: Galoustian, Greta <greta.galoustian@lausd.net>, Carrier, Damon <damon.carrier@lausd.net>, fetu@laschools.org <fetu@laschools.org>, Aguilera Arguelles, Cristina <c.aguileraarguel@lausd.net>, Tran, Jennie <jennie.tran1@lausd.net>, Mkrtchian, Saten <cp-saten.mkrtchian@lausd.net>, Kashani, Mohammad <mohammad.kashani@lausd.net>, Bharwani, Rajinder <RAJINDER.BHARWANI@lausd.net>

Hi Noel, please see attached RFA for RTA extensions for Bassett ES. The scope has not changed since testing was completed. Funding lines are not included as you stated they won't be necessary.

Los Angeles Unified School District

Facilities Environmental Technical Unit

APPROVAL FOR REQUEST TO ADVERTISE

Approval Date: **July 26, 2024** **Approval Expiration Date:** **July 26, 2025**

Site Name: Bassett Elementary School **Site Code:** 2323

Project Description: ADA Improvements Project

Project Manager: Saten Mkrtchian, Design Manager

Work Order Number: 38050577 **Colin Project Number:** 10373370

Condition of Approval*:

Asbestos

- ☐ Not Applicable
- ☐ No asbestos impacted by project scope
- ☐ Asbestos impacted has been abated
- ☐ Abatement will be completed by : _____
- ☐ Disturbance by properly trained personnel as per subpart 1.08, Section 02 8213 [1]
- ☑ Requires approved abatement subcontractor

Lead

- ☐ Not applicable
- ☐ No lead impacted by project scope
- ☐ Lead impacted has been removed
- ☐ Remediation will be completed by: _____
- ☑ Disturbance by properly trained personnel as per subpart 1.09,Section 02 8333 [2]
  Distribute the Lead "Right to Renovate" pamphlet to Site Adminstrator for distribution to parent/guardians of children under the age of six within 60 days of the renovation start date.
- ☐ Requires approved remediation subcontractor

Comments:

Refer to assessment report (Phase I) and Abatement Work Plan (Project Manual) dated July 22nd, 2024 from CNS consultant for reference.
If scope change or additional suspect materials encountered, stop work and contact FETU immediately.

FETU Approver Name: Jennie Tran

FETU Approver Title: Sr. Asbestos Abatement Worker

FETU Approver Signature: Jennie Tran

OEHS FINAL APPROVAL:
07/30/24
Virgil Santiago

* If you must disturb or impact any building material and/or access locations (i.e. attic, crawl, ceiling spaces, etc.) not specified in this scope of work, you must consult the Asbestos Management Plan book located in the school Main Office and contact FETU immediately. DO NOT proceed work without FETU's authorization.

[1] Asbestos: All asbestos related disturbances shall be performed in compliance with LAUSD specification, Section 02 8213, "Asbestos Abatement and Asbestos Related Disturbance"

[2] Lead: All work shall be performed in compliance with LAUSD specification, Section 02 8333, "Lead Abatement and Lead Related Work". Lead-renovation, repair and painting projects (Lead RRP) that disturb painted, varnished, and/or glazed surfaces require special handling, and environmental monitoring. Both firms and individuals must be lead-safe certified. This is regardless of the building or structure's construction date.

REQUEST FOR ASSISTANCE FORM

FACILITIES ENVIRONMENTAL TECHNICAL UNIT

Request for (Please select):

- [x] Environmental Assessment (Phase 1) & Abatement Design (Phase 2)
- [ ] Environmental Project Monitoring (Phase 3)
- [ ] Water Intrusion/Mold Remediation
- [x] Asbestos Assistance
- [ ] Insulation
- [x] Other: Asphalt

Section 1 - General Information *(complete this section for all request types):*

Date: 6/20/2024	Requestor Office: Asset Management	
Requestor Name: Saten Mkrtchian	Title: Design Manager	
Phone No: 818-624-4537	Email:cp-saten.mkrtchian@lausd.net	Site Reg/Dist: West
Site Name: Bassett Elementary School		Site Code: 13676

Building Name & Number (e.g., Administrative Building (001CDG)), Specific Location (e.g., Room #1):
Phase I and II assessment for determination for ADA improvement project scope including asphalt asbestos at the Bassett ES Exterior Site adjacent to the: Multipurpose Building, Building A Building B, Building C, Building D, Kindergarten, Main Office, Lunch Shelter and the staff parking lot.

Section 2 - Project & Funding Information *(provide as much project and/or funding information as possible)*

Official Project Name: Bassett ES - ADA Improvements

Cost Ctr or WBS Project #	Func. Area	GL Acct	Colin Project #	Funding Source
F-313167-03-404-99	0000-8500-14935	580001	10373370	Measure-R

Section 3 - Phase 1 & 2 Request Information* *(Note: Failure to attach a scope or drawings may delay assessment)*

Written scope attached? Yes	Scope % Complete: 100 %	DSA drawings attached? No	Drawing % Complete: 100 %
Phase 1 & 2 supplemental form attached? No	Project Pre-Bid Meeting Date: T.B.D		

Note: *Phase 1 & 2 supplemental form MUST be filled out for ALL phase 1 & 2 requests! See page 2 of this form.

Section 4 - Phase 3 Request Information *(Note: You must attach a copy of FETU approved "Request to Advertise" form)*

WO # on RTA:	RTA Approver Name:

Section5 - Water Intrusion/Mold Remediation, Insulation, or Other Request Information

Describe the Problem:

Section 6 - Asbestos Assistance Request Information

Room/Area Requiring Assistance: Asphalt Paving adjacent MPR Bld A Bld B Bld C Bld D Kinder Main Office Lunch Shelter, parking lot	
Asbestos Management Plan has been reviewed? No	Work Order #:
Bulk sample has been completed on:	Requesting FETU to sample suspect materials? No
Name Building Material in Question: AC paving	Asbestos Present? No
Description of Material(s) to be Abated: AC paving	
Quantity of Material to be Abated: 4499 sf	Abatement Type Requested: Removal
Tentative Start Date of Requestor's Project:	Abatement is required for: Demolition

FOR FETU USE ONLY

FETU Received Date:	Senior Assigned:	Date Assigned:
Parent WO #	Ph. 1 & 2 WO #:	Ph. 3 WO #:
Crew I&P WO #:	Crew Removal WO #:	Crew Lab. WO #:
Date Assigned for Samples:	Date Assigned for Abatement:	
Date Requestor Contacted with Bulk Sample Results:	By:	
Date Requestor Notified of Abatement Completion:	By:	

ENVIRONMENTAL ASSESSMENT (PHASE 1) & ABATEMENT DESIGN (PHASE 2) SUPPLEMENTAL FORM

Purpose of Form: This form will assist the Requestor to determine the proper asbestos and lead requirements by identifying the project as a NO, MINIMAL OR MAJOR IMPACT PROJECT. In turn, information the Requestor provides herein will assist FETU to expeditiously process request for no or minimal impact projects that don't necessarily require a Phase 1 Environmental Assessment.

Date: 6/20/2024	**Requestor:** Saten Mkrtchian	**School:** Bassett Elementary School
Official Project Name: Bassett ES - ADA Improvements		

Directions: Based on the project scope of work, please identify if this Project is a No, Minimal or Major Impact Project by checking the corresponding box below. Also, please check the appropriate sub-box(es) under each main category as appropriate and include any other information that substantiates this project, as No, Minimal or Major Impact Project in the COMMENTS section below.

☐ **THIS IS A NO IMPACT PROJECT**

- ☐ This project does not impact any structures/buildings. (*For example, new stand-alone shade structure.)*
- ☐ Materials to be impacted by this project are not coated with paint, varnish, glazing or any other coating, and are not suspect, known or assumed to be asbestos-containing. In addition, this project does not require working in or exposing any ceiling spaces, attics, crawl spaces or other building interstitial areas. *In the COMMENTS section below, identify the material (e.g., unpainted concrete floor, unpainted metal duct, unpainted concrete walls, unpainted brick wall, etc.).*
- ☐ This project includes work in a building(s) but does not impact any coated surfaces or building materials and does not require working in or exposing any ceiling spaces, attics, crawl spaces or other building interstitial areas. *Elaborate in COMMENTS section below. For example, the scope only includes the re-programming of the fire alarm system or only includes new utilities point of connection at existing conduit and pull box at exterior of building.*
- ☐ This project includes excavation.
- ☐ This project does not include excavation.
- ☐ New construction. Construction Date:
- ☐ Other. *Explain in COMMENTS section below.*

☐ **THIS IS A MINIMAL IMPACT PROJECT**

- ☐ This project requires minimal disturbance or removal of building materials and meets the following criteria:
  - Disturbance or removal of building materials, are less or equal to three (3) square feet per impact area.
  - Total quantity of building material impact does not exceed 99 square feet.
  - No ceiling spaces, attics, crawl spaces or other building interstitial areas are required to be worked in or exposed.
- ☐ This project impacts coated surfaces only.
- ☐ This project does not impact coated surfaces.

An example of a project, which may be a minimal impact project, is a fire alarm upgrade project, which only requires coring, installing surface mounted conduits/raceways and replacing existing surface-mounted fire alarm devices.

☐ **THIS IS A MAJOR IMPACT PROJECT**

- ☐ This project requires major impacts to building materials and/or work in ceiling spaces/attics/crawl spaces/other interstitial building areas. Major impacts to building materials are those that are greater than three (3) square feet for any impact area or total quantity of building material to be impacted exceeds 99 square feet total.

☒ **BASED ON THE SCOPE OF WORK, I AM NOT ABLE TO DETERMINE IF THE PROJECT IS A NO, MINIMAL OR MAJOR IMPACT PROJECT**

COMMENTS *(Include supplemental information regarding the scope of this project and/or additional information regarding no, minimal or major impacts to building materials)*

This is an ADA project that requires some modifications to the existing asphalt. Please see attached plans for project scope and affected areas.

Los Angeles Unified School District

Facilities Environmental Technical Unit

APPROVAL FOR REQUEST TO ADVERTISE

Approval Date: **April 9, 2025** **Approval Expiration Date:** **April 9, 2026**

Site Name: Bassett Elementary School **Site Code:** 2323

Project Description: ADA Improvements - Asphalt Project

Project Manager: Monica Kamin, Design Manager

Work Order Number: 38906610 **Colin Project Number:** 10373370

Condition of Approval*:

Asbestos

- ☐ Not Applicable
- ☐ No asbestos impacted by project scope
- ☐ Asbestos impacted has been abated
- ☐ Abatement will be completed by : _____
- ☐ Disturbance by properly trained personnel as per subpart 1.08, Section 02 8213 [1]
- ☑ Requires approved abatement subcontractor

Lead

- ☐ Not applicable
- ☐ No lead impacted by project scope
- ☐ Lead impacted has been removed
- ☐ Remediation will be completed by: _____
- ☑ Disturbance by properly trained personnel as per subpart 1.09,Section 02 8333 [2]
  Distribute the Lead "Right to Renovate" pamphlet to Site Adminstrator for distribution to parent/guardians of children under the age of six within 60 days of the renovation start date.
- ☐ Requires approved remediation subcontractor

Comments:

THIS IS THE UPDATED RTA. NO CHANGE IN SCOPE OF WORK PER REQUESTOR.
Refer to Assessment Report (Phase 1) and Abatement Work plan (Phase 2) dated July 22nd, 2024 from CNS consultant for reference.
If scope change or additional suspect materials encountered, stop work and contact FETU immediately.

FETU Approver Name: Jennie Tran OEHS Final Approval 04/10/2025

FETU Approver Title: Sr. Asbestos Abatement Worker

FETU Approver Signature:

* If you must disturb or impact any building material and/or access locations (i.e. attic, crawl, ceiling spaces, etc.) not specified in this scope of work, you must consult the Asbestos Management Plan book located in the school Main Office and contact FETU immediately. DO NOT proceed work without FETU's authorization.

[1] Asbestos: All asbestos related disturbances shall be performed in compliance with LAUSD specification, Section 02 8213, "Asbestos Abatement and Asbestos Related Disturbance"

[2] Lead: All work shall be performed in compliance with LAUSD specification, Section 02 8333, "Lead Abatement and Lead Related Work". Lead-renovation, repair and painting projects (Lead RRP) that disturb painted, varnished, and/or glazed surfaces require special handling, and environmental monitoring. Both firms and individuals must be lead-safe certified. This is regardless of the building or structure's construction date.

INTEROFFICE CORRESPONDENCE
Los **A**ngeles **U**nified **S**chool **D**istrict
Facilities Environmental Technical Unit

TO: Facilities Services Division **DATE:** October 22, 2018

FROM: Facilities Environmental Technical Unit

SUBJECT: PROCEDURES FOR SURVEYING AND SAMPLING OF ASBESTOS CONTAINING BUILDING MATERIALS

The District in concurrence with the Rule 1403 of the South Coast Air Quality Management District (SCAQMD), requires facilities or facility components to be thoroughly surveyed, identified and quantified for the presence of asbestos prior to any demolition or renovation activity. Based on a recent amendment to the Rule 1403 there are no exception to this survey requirement based on the date of construction or the age of a facility.

Effective immediately, bulk samples shall be collected for all suspect materials, including materials that were previously not surveyed or sampled based on construction date or date the material installed.

For clarification purposes, this includes newly installed floor coverings, roofing, mastics, and adhesives, wall and ceiling systems, etc. This will also include surveys of previously AHERA exempt buildings and structures.

If you have any questions or need additional clarification, please contact Facilities Environmental Technical unit at (213) 745-1450.

c: Architectural & Engineering Services
Project Execution
Asset Management,
Relocatable Housing
Maintenance & Operation
Office of Environmental Health and Safety

REQUEST FOR ASSISTANCE FORM

FACILITIES ENVIRONMENTAL TECHNICAL UNIT

Request for (Please select):

- [x] Environmental Assessment (Phase 1) & Abatement Design (Phase 2)
- [ ] Environmental Project Monitoring (Phase 3)
- [ ] Water Intrusion/Mold Remediation
- [x] Asbestos Assistance
- [ ] Insulation
- [x] Other: Asphalt - This RFA is for an extension to the current approved RTA which is set to Expire 7/26/25

Section 1 - General Information *(complete this section for all request types):*

Date: 4/4/2025	Requestor Office: Asset Management	
Requestor Name: Monica Kamin	Title: Design Manager	
Phone No: 213-241-8065	Email: cp-monica.kamin@lausd.net	Site Reg/Dist: West
Site Name: Bassett Elementary School		Site Code: 13676

Building Name & Number (e.g., Administrative Building (001CDG)), Specific Location (e.g., Room #1):
Phase I and II assessment for determination for ADA improvement project scope including asphalt asbestos at the Bassett ES Exterior Site adjacent to the: Multipurpose Building, Building A Building B, Building C, Building D, Kindergarten, Main Office, Lunch Shelter and the staff parking lot.

Section 2 - Project & Funding Information *(provide as much project and/or funding information as possible)*

Official Project Name: Bassett ES - ADA Improvements

Cost Ctr or WBS Project #	Func. Area	GL Acct	Colin Project #	Funding Source
			10373370	Measure-R

Section 3 - Phase 1 & 2 Request Information* *(Note: Failure to attach a scope or drawings may delay assessment)*

Written scope attached? Yes	Scope % Complete: 100 %	DSA drawings attached? No	Drawing % Complete: 100 %
Phase 1 & 2 supplemental form attached? No	Project Pre-Bid Meeting Date: T.B.D		

Note: *Phase 1 & 2 supplemental form MUST be filled out for ALL phase 1 & 2 requests! See page 2 of this form.

Section 4 - Phase 3 Request Information *(Note: You must attach a copy of FETU approved "Request to Advertise" form)*

WO # on RTA:	RTA Approver Name:

Section5 - Water Intrusion/Mold Remediation, Insulation, or Other Request Information

Describe the Problem:

Section 6 - Asbestos Assistance Request Information

Room/Area Requiring Assistance: Asphalt Paving adjacent MPR Bld A Bld B Bld C Bld D Kinder Main Office Lunch Shelter, parking lot	
Asbestos Management Plan has been reviewed? No	Work Order #:
Bulk sample has been completed on:	Requesting FETU to sample suspect materials? No
Name Building Material in Question: AC paving	Asbestos Present? No
Description of Material(s) to be Abated: AC paving	
Quantity of Material to be Abated: 4499 sf	Abatement Type Requested: Removal
Tentative Start Date of Requestor's Project:	Abatement is required for: Demolition

FOR FETU USE ONLY

FETU Received Date:	Senior Assigned:	Date Assigned:
Parent WO #	Ph. 1 & 2 WO #: 38906610	Ph. 3 WO #:
Crew I&P WO #:	Crew Removal WO #:	Crew Lab. WO #:
Date Assigned for Samples:	Date Assigned for Abatement:	
Date Requestor Contacted with Bulk Sample Results:	By:	
Date Requestor Notified of Abatement Completion:	By:	

ENVIRONMENTAL ASSESSMENT (PHASE 1) & ABATEMENT DESIGN (PHASE 2) SUPPLEMENTAL FORM

Purpose of Form: This form will assist the Requestor to determine the proper asbestos and lead requirements by identifying the project as a NO, MINIMAL OR MAJOR IMPACT PROJECT. In turn, information the Requestor provides herein will assist FETU to expeditiously process request for no or minimal impact projects that don't necessarily require a Phase 1 Environmental Assessment.

Date: 4/4/2025	**Requestor:** Monica Kamin	**School:** Bassett Elementary School
Official Project Name: Bassett ES - ADA Improvements		

Directions: Based on the project scope of work, please identify if this Project is a No, Minimal or Major Impact Project by checking the corresponding box below. Also, please check the appropriate sub-box(es) under each main category as appropriate and include any other information that substantiates this project, as No, Minimal or Major Impact Project in the COMMENTS section below.

☐ **THIS IS A NO IMPACT PROJECT**

- ☐ This project does not impact any structures/buildings. (*For example, new stand-alone shade structure.)*
- ☐ Materials to be impacted by this project are not coated with paint, varnish, glazing or any other coating, and are not suspect, known or assumed to be asbestos-containing. In addition, this project does not require working in or exposing any ceiling spaces, attics, crawl spaces or other building interstitial areas. *In the COMMENTS section below, identify the material (e.g., unpainted concrete floor, unpainted metal duct, unpainted concrete walls, unpainted brick wall, etc.).*
- ☐ This project includes work in a building(s) but does not impact any coated surfaces or building materials and does not require working in or exposing any ceiling spaces, attics, crawl spaces or other building interstitial areas. *Elaborate in COMMENTS section below. For example, the scope only includes the re-programming of the fire alarm system or only includes new utilities point of connection at existing conduit and pull box at exterior of building.*
- ☐ This project includes excavation.
- ☐ This project does not include excavation.
- ☐ New construction. Construction Date:
- ☐ Other. *Explain in COMMENTS section below.*

☐ **THIS IS A MINIMAL IMPACT PROJECT**

- ☐ This project requires minimal disturbance or removal of building materials and meets the following criteria:
  - Disturbance or removal of building materials, are less or equal to three (3) square feet per impact area.
  - Total quantity of building material impact does not exceed 99 square feet.
  - No ceiling spaces, attics, crawl spaces or other building interstitial areas are required to be worked in or exposed.
- ☐ This project impacts coated surfaces only.
- ☐ This project does not impact coated surfaces.

An example of a project, which may be a minimal impact project, is a fire alarm upgrade project, which only requires coring, installing surface mounted conduits/raceways and replacing existing surface-mounted fire alarm devices.

☐ **THIS IS A MAJOR IMPACT PROJECT**

- ☐ This project requires major impacts to building materials and/or work in ceiling spaces/attics/crawl spaces/other interstitial building areas. Major impacts to building materials are those that are greater than three (3) square feet for any impact area or total quantity of building material to be impacted exceeds 99 square feet total.

☒ **BASED ON THE SCOPE OF WORK, I AM NOT ABLE TO DETERMINE IF THE PROJECT IS A NO, MINIMAL OR MAJOR IMPACT PROJECT**

COMMENTS *(Include supplemental information regarding the scope of this project and/or additional information regarding no, minimal or major impacts to building materials)*

This is an ADA project that requires some modifications to the existing asphalt. Please see attached plans for project scope and affected areas.

Tran, Jennie

From: Facilities Environmental Technical Unit <fetu@laschools.org>
Sent: Friday, April 4, 2025 1:28 PM
To: Tran, Jennie
Cc: Galoustian, Greta; Carrier, Damon; Escobar, Noel
Subject: BASSETT ES - PHASE 1 & 2 - UPDATED RTA ADA IMPROVEMENTS (ASPHALT)
Attachments: FETU RFA_Bassett ES_Ph1 Ph2 Asphalt-04.04.25-Extension Request.pdf; Approved RTA_Bassett ES_Asphalt_08-02-24.pdf

Hello Jennie,

New project - please review request form and/or attachment for completeness and plan as soon as possible.

PH 1 & 2 WO#: 38906610

Thanks,

Cristina

Facilities Environmental Technical Unit (FETU)

Asbestos • Lead • Water Remediation
Mold Cleanup • Insulation • Demolition
M & O Area C3 Main Office Building - 2nd Floor
1240 South Naomi Avenue
Los Angeles, CA 90021
Office: 213 745-1450
Fax: 213 745-1488

---------- Forwarded message ---------
From: **Kamin, Monica** <cp-monica.kamin@lausd.net>
Date: Fri, Apr 4, 2025 at 12:20 PM
Subject: RE: RTAs - Bassett ES - RTA Extension Request
To: Escobar, Noel <noel.escobar@lausd.net>
Cc: Galoustian, Greta <greta.galoustian@lausd.net>, Carrier, Damon <damon.carrier@lausd.net>, fetu@laschools.org <fetu@laschools.org>, Aguilera Arguelles, Cristina <c.aguileraarguel@lausd.net>, Tran, Jennie <jennie.tran1@lausd.net>, Mkrtchian, Saten <cp-saten.mkrtchian@lausd.net>, Kashani, Mohammad <mohammad.kashani@lausd.net>, Bharwani, Rajinder <RAJINDER.BHARWANI@lausd.net>

Hi Noel, please see attached RFA for RTA extensions for Bassett ES. The scope has not changed since testing was completed. Funding lines are not included as you stated they won't be necessary.

Los Angeles Unified School District

Facilities Environmental Technical Unit

APPROVAL FOR REQUEST TO ADVERTISE

Approval Date: **July 26, 2024** **Approval Expiration Date:** **July 26, 2025**

Site Name: Bassett Elementary School **Site Code:** 2323

Project Description: ADA Improvements - Asphalt Project

Project Manager: Saten Mkrtchian, Design Manager

Work Order Number: 38081478 **Colin Project Number:** 10373370

Condition of Approval*:

Asbestos

- ☐ Not Applicable
- ☐ No asbestos impacted by project scope
- ☐ Asbestos impacted has been abated
- ☐ Abatement will be completed by : _____
- ☐ Disturbance by properly trained personnel as per subpart 1.08, Section 02 8213 [1]
- ☑ Requires approved abatement subcontractor

Lead

- ☐ Not applicable
- ☐ No lead impacted by project scope
- ☐ Lead impacted has been removed
- ☐ Remediation will be completed by: _____
- ☑ Disturbance by properly trained personnel as per subpart 1.09,Section 02 8333 [2]
  Distribute the Lead "Right to Renovate" pamphlet to Site Adminstrator for distribution to parent/guardians of children under the age of six within 60 days of the renovation start date.
- ☐ Requires approved remediation subcontractor

Comments:

Refer to assessment report (Phase I) and Abatement Work Plan (Project Manual) dated July 22nd, 2024 from CNS consultant for reference.
If scope change or additional suspect materials encountered, stop work and contact FETU immediately.

FETU Approver Name: Jennie Tran

FETU Approver Title: Sr. Asbestos Abatement Worker

FETU Approver Signature: Jennie Tran

OEHs FINAL APPROVAL:
08/02/24
Virgil Santiago

* If you must disturb or impact any building material and/or access locations (i.e. attic, crawl, ceiling spaces, etc.) not specified in this scope of work, you must consult the Asbestos Management Plan book located in the school Main Office and contact FETU immediately. DO NOT proceed work without FETU's authorization.

[1] Asbestos: All asbestos related disturbances shall be performed in compliance with LAUSD specification, Section 02 8213, "Asbestos Abatement and Asbestos Related Disturbance"

[2] Lead: All work shall be performed in compliance with LAUSD specification, Section 02 8333, "Lead Abatement and Lead Related Work". Lead-renovation, repair and painting projects (Lead RRP) that disturb painted, varnished, and/or glazed surfaces require special handling, and environmental monitoring. Both firms and individuals must be lead-safe certified. This is regardless of the building or structure's construction date.

REQUEST FOR ASSISTANCE FORM

FACILITIES ENVIRONMENTAL TECHNICAL UNIT

Request for (Please select):

- [x] Environmental Assessment (Phase 1) & Abatement Design (Phase 2)
- [ ] Environmental Project Monitoring (Phase 3)
- [ ] Water Intrusion/Mold Remediation
- [x] Asbestos Assistance
- [ ] Insulation
- [x] Other: Asphalt

Section 1 - General Information *(complete this section for all request types):*

Date: 6/20/2024	Requestor Office: Asset Management	
Requestor Name: Saten Mkrtchian	Title: Design Manager	
Phone No: 818-624-4537	Email:cp-saten.mkrtchian@lausd.net	Site Reg/Dist: West
Site Name: Bassett Elementary School		Site Code: 13676

Building Name & Number (e.g., Administrative Building (001CDG)), Specific Location (e.g., Room #1):
Phase I and II assessment for determination for ADA improvement project scope including asphalt asbestos at the Bassett ES Exterior Site adjacent to the: Multipurpose Building, Building A Building B, Building C, Building D, Kindergarten, Main Office, Lunch Shelter and the staff parking lot.

Section 2 - Project & Funding Information *(provide as much project and/or funding information as possible)*

Official Project Name: Bassett ES - ADA Improvements

Cost Ctr or WBS Project #	Func. Area	GL Acct	Colin Project #	Funding Source
F-313167-03-404-99	0000-8500-14935	580001	10373370	Measure-R

Section 3 - Phase 1 & 2 Request Information* *(Note: Failure to attach a scope or drawings may delay assessment)*

Written scope attached? Yes	Scope % Complete: 100 %	DSA drawings attached? No	Drawing % Complete: 100 %
Phase 1 & 2 supplemental form attached? No	Project Pre-Bid Meeting Date: T.B.D		

Note: *Phase 1 & 2 supplemental form MUST be filled out for ALL phase 1 & 2 requests! See page 2 of this form.

Section 4 - Phase 3 Request Information *(Note: You must attach a copy of FETU approved "Request to Advertise" form)*

WO # on RTA:	RTA Approver Name:

Section5 - Water Intrusion/Mold Remediation, Insulation, or Other Request Information

Describe the Problem:

Section 6 - Asbestos Assistance Request Information

Room/Area Requiring Assistance: Asphalt Paving adjacent MPR Bld A Bld B Bld C Bld D Kinder Main Office Lunch Shelter, parking lot		
Asbestos Management Plan has been reviewed? No	Work Order #:	
Bulk sample has been completed on:	Requesting FETU to sample suspect materials? No	
Name Building Material in Question: AC paving		Asbestos Present? No
Description of Material(s) to be Abated: AC paving		
Quantity of Material to be Abated: 4499 sf	Abatement Type Requested: Removal	
Tentative Start Date of Requestor's Project:	Abatement is required for: Demolition	

FOR FETU USE ONLY

FETU Received Date:	Senior Assigned:	Date Assigned:
Parent WO #	Ph. 1 & 2 WO #:	Ph. 3 WO #:
Crew I&P WO #:	Crew Removal WO #:	Crew Lab. WO #:
Date Assigned for Samples:	Date Assigned for Abatement:	
Date Requestor Contacted with Bulk Sample Results:	By:	
Date Requestor Notified of Abatement Completion:	By:	

ENVIRONMENTAL ASSESSMENT (PHASE 1) & ABATEMENT DESIGN (PHASE 2) SUPPLEMENTAL FORM

Purpose of Form: This form will assist the Requestor to determine the proper asbestos and lead requirements by identifying the project as a NO, MINIMAL OR MAJOR IMPACT PROJECT. In turn, information the Requestor provides herein will assist FETU to expeditiously process request for no or minimal impact projects that don't necessarily require a Phase 1 Environmental Assessment.

Date: 6/20/2024	**Requestor:** Saten Mkrtchian	**School:** Bassett Elementary School
Official Project Name: Bassett ES - ADA Improvements		

Directions: Based on the project scope of work, please identify if this Project is a No, Minimal or Major Impact Project by checking the corresponding box below. Also, please check the appropriate sub-box(es) under each main category as appropriate and include any other information that substantiates this project, as No, Minimal or Major Impact Project in the COMMENTS section below.

☐ **THIS IS A NO IMPACT PROJECT**

- ☐ This project does not impact any structures/buildings. (*For example, new stand-alone shade structure.)*
- ☐ Materials to be impacted by this project are not coated with paint, varnish, glazing or any other coating, and are not suspect, known or assumed to be asbestos-containing. In addition, this project does not require working in or exposing any ceiling spaces, attics, crawl spaces or other building interstitial areas. *In the COMMENTS section below, identify the material (e.g., unpainted concrete floor, unpainted metal duct, unpainted concrete walls, unpainted brick wall, etc.).*
- ☐ This project includes work in a building(s) but does not impact any coated surfaces or building materials and does not require working in or exposing any ceiling spaces, attics, crawl spaces or other building interstitial areas. *Elaborate in COMMENTS section below. For example, the scope only includes the re-programming of the fire alarm system or only includes new utilities point of connection at existing conduit and pull box at exterior of building.*
- ☐ This project includes excavation.
- ☐ This project does not include excavation.
- ☐ New construction. Construction Date:
- ☐ Other. *Explain in COMMENTS section below.*

☐ **THIS IS A MINIMAL IMPACT PROJECT**

- ☐ This project requires minimal disturbance or removal of building materials and meets the following criteria:
  - Disturbance or removal of building materials, are less or equal to three (3) square feet per impact area.
  - Total quantity of building material impact does not exceed 99 square feet.
  - No ceiling spaces, attics, crawl spaces or other building interstitial areas are required to be worked in or exposed.
- ☐ This project impacts coated surfaces only.
- ☐ This project does not impact coated surfaces.

An example of a project, which may be a minimal impact project, is a fire alarm upgrade project, which only requires coring, installing surface mounted conduits/raceways and replacing existing surface-mounted fire alarm devices.

☐ **THIS IS A MAJOR IMPACT PROJECT**

- ☐ This project requires major impacts to building materials and/or work in ceiling spaces/attics/crawl spaces/other interstitial building areas. Major impacts to building materials are those that are greater than three (3) square feet for any impact area or total quantity of building material to be impacted exceeds 99 square feet total.

☒ **BASED ON THE SCOPE OF WORK, I AM NOT ABLE TO DETERMINE IF THE PROJECT IS A NO, MINIMAL OR MAJOR IMPACT PROJECT**

COMMENTS *(Include supplemental information regarding the scope of this project and/or additional information regarding no, minimal or major impacts to building materials)*

This is an ADA project that requires some modifications to the existing asphalt. Please see attached plans for project scope and affected areas.

CNS ENVIRONMENTAL, INC.

To:
Mr. Saten Mkrtchian
Los Angeles Unified School District
Asset Management – Facilities Planning & Development
333 South Beaudry Avenue, 23rd Floor
Los Angeles, California 90017

Ms. Greta Galoustian
Los Angeles Unified School District
Facilities Environmental Technical Unit
1240 South Naomi Avenue, 2nd Floor
Los Angeles, California 90021

ASBESTOS ENGINEERING ASSESSMENT
Bassett Street Elementary School (2323)
15756 Bassett Street
Lake Balboa, California 91406
ADA Improvements
Report 1 of 2
Project/Colin#: 10373370; Project WO#: 38050577
Contract #2290037 / SAP# 4400010136

CNS Environmental Project Number: 24-296

Date Prepared: July 22, 2024

Edward D. Spinney, CAC #00-2795

Ahmad Abdollahian, CAC #02-3251

650 North Rose Drive, Suite 616
Placentia, California 92870

Phone #: (714) 525-5115
Fax #: (714) 526-5445

TABLE OF CONTENTS

Section	Title	Page
i.	FETU Approval Letter	2
ii.	List of Acronyms	3
iii.	List of Definitions	4
I.	Executive Summary, Introduction, Purpose, and Scope of Services	5
II.	Scope of Work	6
III.	Visual Survey, Sampling Methodology, and Analytical Procedures	7
IV.	Discussion of Survey Findings and Recommendations	8
V.	General Recommendations and Notes	29
VI.	Lead Related Construction / Impact to Coated Surfaces	30
VII.	Confidentiality and Limitations	32

Appendices

Appendix A Analytical Results from Samples

Appendix B Asbestos Survey Form A

Appendix C Consultant's Certifications

Appendix D Scope of Work

Los Angeles Unified School District
Facilities Services Division

OFFICE OF THE SUPERINTENDENT **FACILITIES SERVICES DIVISION**

July 26th, 2024

CNS Environmental, Inc.
ATTN: Edward D. Spinney
650 North Rose Drive, Suite 616
Placentia, CA 9192870201

RE: PHASE _I_____ REVIEW AND APPROVAL FOR ASBESTOS __X__ and/or LEAD __X_____

The Facilities Environmental Technical Unit (FETU) has reviewed and approved your Phase ____I_____ document(s) for the project listed below.

School: Bassett Street Elementary School School Code # 2323

Project: ADA Improvements and Asphalt Project Colin No. 10373370

Date of Report: July 22nd, 2024 Maximo Work Order No. 38050577

If you have any questions regarding this approval, please call the FETU at (213) 745-1450.

Sincerely,

Jennie Tran

Jennie Tran
Sr. Asbestos Abatement Worker
Facilities Environmental Technical Unit

Greta Galoustian, Facilities Environmental Technical Manager
Kwun Yang, FETU Analyst

LIST OF ACRONYMS
for Asbestos

ACM	Asbestos-Containing Material
ACBM	Asbestos-Containing Building Material
ACCM	Asbestos-Containing Construction Material (California only)
AHERA	Asbestos Hazard Emergency Response Act
CAC	California Asbestos Consultant
Cal/OSHA	California Division of Occupational Safety and Health
CCR	California Code of Regulations
CSST	California Site Surveillance Technician
CFR	Code of Federal Regulations
EPA	Environmental Protection Agency
FETU	Facilities Environmental Technical Unit (LAUSD)
HEPA	High Efficiency Particulate Air
HVAC	Heating, Ventilation, and Air Conditioning
LAUSD	Los Angeles Unified School District
NEA	Negative Exposure Assessment
NESHAP	National Emission Standards for Hazardous Air Pollutants
OEHS	Office of Environmental Health & Safety (LAUSD)
PEL	Permissible Exposure Limit
PLM	Polarized Light Microscopy
RACM	Regulated Asbestos-Containing Material
SCAQMD	South Coast Air Quality Management District

LIST OF DEFINITIONS
for Asbestos

Abatement: Control/elimination of asbestos through operations and maintenance, repair, enclosure, encapsulation, or removal.

Amended Water: Water to which a surfactant (wetting agent) has been added to increase the ability of the liquid to penetrate ACM.

Asbestos: Asbestiform varieties of Chrysotile (serpentine), crocidolite (riebeckite), amosite (cummingtonitegrunerite), anthophyllite tremolite, and actinolite.

Asbestos-Containing Material (ACM): Material or product containing more than one percent (1%) asbestos

Asbestos-Containing Building Material (ACBM): Surfacing ACM, thermal system insulation ACM, or miscellaneous ACM that is found in or on interior structural members or other parts of a school building.

Asbestos-Containing Construction Material (ACCM): For California only. Manufactured construction material that contains more than one-tenth of one percent (0.1%) asbestos by weight.

Building ID Number or Code: Six-digit alphanumeric identification code assigned to each building on a site; sometimes referred to as the insurance code, ID number, or other similar terms.

District: The Los Angeles Unified School District and its representatives.

Friable: Used in reference to a school building material which, when dry, may be crumbled, pulverized, or reduced to powder by hand pressure.

High Efficiency Particulate Air (HEPA): Filter or system capable of removing particulates of 0.3 microns or larger from air at 99.97 percent or greater efficiency.

Nonfriable: Used in reference to a school building material which, when dry, may not be crumbled, pulverized, or reduced to powder by hand pressure.

Plasticize: To cover floors, ceilings, and walls with plastic (polyethylene) sheeting.

Regulated Area: Area established by the employer (abatement contractor) to demarcate where asbestos work is conducted, and by the adjoining area where debris and waste from such asbestos work accumulate; a work area within which airborne concentrations of asbestos exceed or may exceed (with reasonable possibility) the permissible exposure limit.

I. Executive Summary, Introduction, Purpose, and Scope of Services

This Asbestos Engineering Assessment Report has been prepared by CNS Environmental, Inc., (CNS) for the upcoming ADA Improvements Project at the Bassett Street Elementary School (2323), located at 15756 Bassett Street, Lake Balboa, California 91406.

The Asbestos Engineering Assessment Report was requested by Ms. Jennie Tran of the Los Angeles Unified School District (LAUSD) Facilities Environmental Technical Unit on June 25, 2024. The Asbestos Engineering Assessment was performed on July 1, 2024, by Mr. Eric Bracamontes, a California Division of Occupational Safety and Health, Certified Site Surveillance Technician, (#17-5970) under the supervision Mr. Ahmad Abdollahian, a California Division of Occupational Safety and Health, Certified Asbestos Consultant, (#02-3251).

Purpose:

CNS was contacted to review the project addressed in this report to determine the impact the project will have on asbestos and lead containing materials during the demolition, renovation, and construction activities. This report addresses these impacts and provides recommendation for appropriate handling and abatement (where required) of these materials.

Scope of Services:

CNS reviewed the Scope of Work as well as Drawings and Specification (where provided) to identify the extent of the project including, but not limited to, the buildings, rooms, and spaces in or on the buildings, and surfaces and materials to be impacted. The Asbestos Management Plan for the site was reviewed to determine if the existing buildings, rooms, spaces, and materials had been tested and if these contained asbestos. A field inspection was conducted to determine the condition of the asbestos-containing building materials and to verify that all materials to be impacted were identified in the Asbestos Management Plan. When materials to be impacted were identified on site but not included in the Asbestos Management Plan and material in the Asbestos Management Plan were assumed to be asbestos-containing or if the materials listed as non-ACBM could not be substantiated by sample results in the Plan or the FETU files, then additional samples were collected and the results are incorporated in this report.

Recommendations are also provided for the appropriate handling and abatement (where required) of the impacted ACBM.

II. Scope of Work

The asbestos engineering assessment performed was limited only to the areas involved in, and building materials impacted by the scope of work for the above referenced project.

The following buildings are impacted by the scope of work:

Administrative Building (001DAN)
Remove and replace adjacent exterior concrete ramp for ADA improvements

Multipurpose Building (002DAN)
ADA improvements, chair lift installation, and restroom upgrades

Building A (003DAN)
Doors with door hardware improvements, signage installation, and adjacent exterior concrete walkway removal

Utility & Classroom Building B (004DAN)
Classroom sink & cabinet removal for ADA improvements and adjacent exterior concrete walkway removal

Building C (005DAN)
Doors with door hardware improvements, classroom sink & cabinet removal, restroom upgrades, exterior drinking fountain removal, and adjacent exterior concrete walkway removal

Building D (006DAN)
Door with door hardware improvements, fire alarm system upgrades, and restroom upgrades

Kindergarten Building (007DAN)
Restroom upgrades, classroom cabinet removal, doors with door hardware improvements

2/3 Unit Relocatable (X3495Y)
Classroom sink & cabinet removal

The project will involve the ADA improvements in the Buildings listed above. Scope of work will include exterior concrete ramp & walkway removal, new chair lift installation, restroom upgrades, signage installation, doors with door hardware improvements, classroom sinks & cabinets removal, exterior drinking fountain removal, fire alarm system upgrades, and abating any ACM by an LAUSD approved certified asbestos abatement contractor.

III. Visual Survey, Sampling Methodology, and Analytical Procedures

VISUAL SURVEY:

A visual survey consisting of a walkthrough and visual inspection of the project area was conducted to determine the presence of suspect materials that were accessible and/or exposed in the areas that may be disturbed during the project. This included the identification of suspect asbestos containing building components and the determination of the condition of those components.

SAMPLING METHODOLOGY:

Samples were collected under the supervision of a California Certified Asbestos Consultant following AHERA protocol. Selected samples of exposed and/or accessible materials were identified as suspect materials that are commonly found to contain asbestos, which include Surfacing Materials, Thermal System Insulation, and Miscellaneous Materials. The EPA 3-5-7 Rule was used when sampling Surfacing Materials and three samples were taken from each suspect Thermal System Insulation and Miscellaneous Material that might be affected by the proposed work to be performed. Suspect materials were grouped into homogenous sampling areas, which were limited in area to within a structure as defined by the six-digit building identification code. At the time of sampling, the location and condition (friable or non-friable) of the material was noted. Where wood substrates exist in the building, sampling will include the coring of said floor to determine if any hidden suspect asbestos containing layers are present.

ANALYTICAL PROCEDURES:

The bulk samples were analyzed by Polarized Light Microscopy (PLM), with dispersion staining as described by the interim method of the determination of asbestos in bulk insulation, Federal Register, 59 FR 542, Jan. 5, 1994; and 59 FR 58970, Aug. 1, 1994. This is a standard method of analysis in optical mineralogy and the currently accepted method for the determination of asbestos in bulk samples. A suspect material is immersed in a solution of known refractive index and subjected to illumination by polarized light. The characteristic color display results enable mineral identification. It should be noted that some asbestos containing materials might not be accurately identified and/or quantified by PLM. As an example, the original fabrication of vinyl floor tiles routinely involved milling of asbestos fibers to extremely small sizes. As a result, these fibers may go undetected under the standard polarized light microscopy method. Transmission Electron Microscopy (TEM) may be necessary for a more definitive analysis of these materials.

A material is considered to be asbestos-containing if at least one sample collected from the area shows asbestos present in an amount greater than one-tenth of one percent by weight (>0.1%). Asbestos-containing materials are regulated by federal, state, and local agencies. The EPA National Emission Standards for Hazardous Air Pollutants (NESHAP) requires an inspection for asbestos be done on facilities which are to undergo demolition or renovation work. Materials found to contain asbestos may need to be removed prior to the start of such demolition/renovation work.

IV. Discussion of Survey Findings and Recommendations

Asbestos containing materials were found in the buildings. The tables below include materials that are anticipated to be impacted during the project.

CNS Environmental's findings are as follows:

A. Administrative Building (001DAN)

1. Asbestos-Containing Materials (ACM >1%) and Asbestos-Containing Construction Materials (ACCM >0.1%) anticipated to be disturbed during the project:

   No ACM or ACCM will be impacted

2. Non-Asbestos-Containing Materials (Non-ACM) anticipated to be disturbed during the project:

MATERIALS	LOCATION	SAMPLE NO.
a. Stucco walls	Location: Exterior walls Scope of Impact: Removal of exterior east concrete ramp	0201-0551 to 0201-0553 (01/04/02) Negative by Point Count Analysis 992841 (11/18/95)
b. Vapor barrier paper walls	Location: Exterior walls (behind stucco walls) Scope of Impact: For information purposes only during removal of exterior concrete ramp	2407-1502 to 2407-1504 07/11/24

3. Recommendations for handling ACM and/or ACCM:

   No ACM or ACCM will be impacted

4. General Notes:

   a) No attics, crawlspace, or ceiling space will be impacted.

   b) Scope of work is limited to the removal of exterior concrete ramp.

5. Where painted surfaces are impacted (Assumed lead-based paint) the work shall be performed in accordance with LAUSD Specification, Section 02 8333 (Lead Abatement and Lead Related Construction Work) and must be performed a RRP Certified Firm and by RRP trained personnel qualified in the techniques of lead-related construction, handling, disposal of lead containing materials, and in accordance with Environmental Protection Agency (EPA) and Renovation, Repair, and Painting (RRP). See Section VI for additional information.

B. Multipurpose Building (002DAN)

1. Asbestos-Containing Materials (ACM >1%) and Asbestos-Containing Construction Materials (ACCM >0.1%) anticipated to be disturbed during the project:

MATERIALS	LOCATION	SAMPLE NO.
a. **Non-ACM** 12”x12” dark green floor tile with associated **ACM** black mastic (on concrete substrate)	Location: Northwest auditorium storage room (chair storage), faculty dining room, passage wat, and cot room Scope of Impact: Wall and steps removal in northwest auditorium storage (chair storage)	2312-1698 to 2312-1700 (12/21/23)
b. **Non-ACM** 12”x12” light green floor tile with associated **ACM** black mastic (on concrete substrate)	Location: Northwest auditorium storage room (chair storage), faculty dining room, passage wat, and cot room Scope of Impact: Wall and steps removal in northwest auditorium storage (chair storage)	2312-1701 to 2312-1703 (12/21/23)
c. Top layer: **Non-ACM** 12”x12” dark blue and **Non-ACM** 12”x12” light blue – mixed – floor tiles with associated **Non-ACM** adhesive over Bottom layer: **Non-ACM** gray leveling compound with **Non-ACM** white encapsulation material and **ACM** black mastic (on concrete substrate)	Location: Auditorium Scope of Impact: Minor impact during door threshold removal and replacement at east and southwest entrances	2407-0617 to 2407-0619 (07/01/24)

2. Non-Asbestos-Containing Materials (Non-ACM) anticipated to be disturbed during the project:

MATERIALS	**LOCATION**	**SAMPLE NO.**
a. 12”x12” straight ceiling tiles with associated adhesive	Location: Auditorium, northwest auditorium storage room (chair storage), passageway, faculty dining, cot room, kitchen area, girl’s restroom, and boy’s restroom Scope of Impact: Wall removal in northwest storage, surface mounted conduit installation, and restroom upgrades	993247 to 993249 993250 to 993252 (11/22/95) 2312-1695 to 2312-1697 (12/21/93)
b. Varnish hardwood floor (core)	Location: Auditorium stage area Scope of Impact: Partial removal of stage stairs for installation of new chair lift	2407-0614 to 2407-1616 (07/01/24)
c. Stucco walls	Location: Exterior walls Scope of Impact: For information purposes during restroom upgrades and plumbing installation	992842 (11/18/95) 8841B-B10 to 8841B-B16 (02/06/02) by Point Count 0201-0561 to 0201-05-62 (01/04/02)
d. Vapor barrier paper walls	Location: Exterior walls (behind stucco walls) Scope of Impact: For information purposes during restroom upgrades and plumbing installation	2407-0623 to 2407-0625 (07/01/24)
e. Sand plaster walls	Location: Auditorium, girl’s restroom, boy’s restroom, stage area, northwest auditorium storage room (chair storage), hopper room, and faculty dining Scope of Impact: Wall removal in northwest storage room and restroom upgrades	993224 to 993226 (11/21/95) 993244 to 993246, 993256 to 993262 (11/22/95)

MATERIALS	LOCATION	SAMPLE NO.
f. Sand plaster ceilings	Location: Above 12”x12” straight ceiling tile in - Auditorium, northwest auditorium storage room (chair storage), passageway, faculty dining, cot room, storage rooms, kitchen area, girl’s restroom, and boy’s restroom Scope of Impact: Wall removal in northwest storage, surface mounted conduit installation, and restroom upgrades	993241 to 993243 (11/22/95) 993253 to 993255 (11/22/95) 993263 to 993267 (11/22/95)
g. Mixed size mosaic blue and light blue ceramic floor tiles with grout (on concrete substrate)	Location: Girl’s restroom and boy’s restroom in Auditorium Scope of Impact: Restroom upgrades	2407-0620 to 2407-0622 (07/01/24)
h. Wood varnish baseboards	Location: Auditorium, stage area, and northwest auditorium storage room (chair storage) Scope of Impact: Wall and steps removal in northwest auditorium storage (chair storage)	Non-suspect

3. Recommendations for handling ACM and/or ACCM:
   a. **Non-ACM** 12”x12” dark green floor tile with associated **ACM** black mastic (on concrete substrate)
      1) All Abatement work shall be performed by an LAUSD Approved Contractor according to the current District Specification Section 02 8213 “Asbestos Abatement and Asbestos Related Disturbance” under the supervision of the FETU or by a District approved Environmental Consultant.
   b. **Non-ACM** 12”x12” light green floor tile with associated **ACM** black mastic (on concrete substrate)
      1) All Abatement work shall be performed by an LAUSD Approved Contractor according to the current District Specification Section 02 8213 “Asbestos Abatement and Asbestos Related Disturbance” under the supervision of the FETU or by a District approved Environmental Consultant.

c. Top layer: **Non-ACM** 12”x12” dark blue and **Non-ACM** 12”x12” light blue – mixed – floor tiles with associated **Non-ACM** adhesive over Bottom layer: **Non-ACM** gray leveling compound with **Non-ACM** white encapsulation material and **ACM** black mastic

1) Minor disturbances that are 3 square feet or 3 linear feet or less per impact area and not to disturb 100 square feet or greater cumulatively on any one project can be performed by AHERA 16 Hour O & M trained personnel. These disturbances shall be in accordance with LAUSD Specification Section 02 8213 – Asbestos Abatement and Asbestos Related Disturbance.

4. General Notes:

a) Attic space will not be impacted.

b) Crawlspaces below auditorium stage is inaccessible and area shall be checked prior to stage step removal for new chair lift installation.

c) Ceiling space above northwest auditorium storage room (chair lift), and auditorium restrooms were inaccessible at the time of the survey. Areas shall be checked prior to ceiling openings.

d) Flooring is on concrete substrate in girl’s restroom, boy’s restroom, auditorium, and northwest auditorium storage room (chair storage).

e) Total of two (2) screwed on mirrors observed in the girl’s restroom and in the boy’s restroom by CNS on 07/01/24. No mirror mastic present.

f) Auditorium total of five (5) wood doors were checked by CNS on 7/01/24 and no suspect materials observed.

5. Where painted surfaces are impacted (Assumed lead-based paint) the work shall be performed in accordance with LAUSD Specification, Section 02 8333 (Lead Abatement and Lead Related Construction Work) and must be performed a RRP Certified Firm and by RRP trained personnel qualified in the techniques of lead-related construction, handling, disposal of lead containing materials, and in accordance with Environmental Protection Agency (EPA) and Renovation, Repair, and Painting (RRP). See Section VI for additional information.

C. Building A (003DAN)

1. Asbestos-Containing Materials (ACM >1%) and Asbestos-Containing Construction Materials (ACCM >0.1%) anticipated to be disturbed during the project:

MATERIALS	LOCATION	SAMPLE NO.
a. **Non-ACM** 12”x12” light brown floor tile with associated **ACM** black mastic (on concrete substrate)	Location: Rooms 35 and 36 Scope of Impact: Minor impact during removal of door thresholds in classrooms	0701-0869 to 0701-0873 (01/11/07)

2. Non-Asbestos-Containing Materials (Non-ACM) anticipated to be disturbed during the project:

MATERIALS	LOCATION	SAMPLE NO.
a. Sand plaster walls	Location: Rooms 31A, 31B, 32, 35, and 36 Scope of Impact: Removal of classroom doors with hardware	992855 to 992857 (11/18/95)
b. Stucco walls	Location: Exterior walls Scope of Impact: Installation of new signage and removal of exterior concrete walkway	992843 (11/18/95) 0201-0566 to 0201-0567 (01/04/02)
c. Vapor barrier paper walls	Location: Exterior walls (behind stucco walls) Scope of Impact: Installation of new signage and removal of exterior concrete walkway	2407-0626 to 2407-0628 (07/01/24)
d. Wood varnish baseboards	Location: Rooms 35 and 36 Scope of Impact: Removal of baseboards in rooms 35 and 36	Non-suspect

3. Recommendations for handling ACM and/or ACCM:
   a. **Non-ACM** 12”x12” light brown floor tile with associated **ACM** mastic
      1) Minor disturbances that are 3 square feet or 3 linear feet or less per impact area and not to disturb 100 square feet or greater cumulatively on any one project can be performed by AHERA 16 Hour O & M trained personnel. These disturbances shall be in accordance with LAUSD Specification Section 02 8213 – Asbestos Abatement and Asbestos Related Disturbance.

4. General Notes:
   a) No attic space will be impacted.
   b) No crawlspace will be impacted.
   c) No ceiling space will be impacted.
   d) Flooring is on concrete substrate.
   e) Scope of work is limited to door with door hardware removal, exterior concrete walkway removal, and installation of signage.
   f) Building (003DAN) Rooms 35 and 36 total of four (4) wood doors were checked by CNS on 7/01/24 and no suspect materials observed.
   g) Total of two (2) screwed-on mirrors observed to be present in Rooms 35 and 36 by CNS on 07/01/24. No mirror mastic present

5. Where painted surfaces are impacted (Assumed lead-based paint) the work shall be performed in accordance with LAUSD Specification, Section 02 8333 (Lead Abatement and Lead Related Construction Work) and must be performed a RRP Certified Firm and by RRP trained personnel qualified in the techniques of lead-related construction, handling, disposal of lead containing materials, and in accordance with Environmental Protection Agency (EPA) and Renovation, Repair, and Painting (RRP). See Section VI for additional information.

D. Utility & Classrooms Building B (004DAN)

1. Asbestos-Containing Materials (ACM >1%) and Asbestos-Containing Construction Materials (ACCM >0.1%) anticipated to be disturbed during the project:

MATERIALS	LOCATION	SAMPLE NO.
a. **Non-ACM** 12”x12” light brown floor tile with associated **ACM** black mastic (on concrete)	Location: Rooms 33, 34, 37, and 38 Scope of Impact: Removal of sink and cabinet in Room 38 and door threshold removal in 37 & 38	2407-0629 to 2407-0631 (07/01/24)
b. **Non-ACM** 12”x12” brown floor tile with associated **Non-ACM** adhesive and **ACM** black mastic – patch (on concrete)	Location: Patch in Room 38 – around sink area and under sink Scope of Impact: Removal of sink and cabinet in Room 38 and door threshold removal	2407-0632 to 2407-0634 (07/01/24)

2. Non-Asbestos-Containing Materials (Non-ACM) anticipated to be disturbed during the project:

MATERIALS	LOCATION	SAMPLE NO.
a. Sand plaster walls	Location: Throughout interior walls Scope of Impact: Removal of classroom sink and cabinet	B-1 to B-7 (05/24/88)
b. Stucco walls	Location: Exterior walls Scope of Impact: Exterior concrete walkway removal at landing of Rooms 37 and 38	0201-0586 to 0201-0587 (01/04/02) Negative by Point Count Analysis 992844 (11/18/95)
c. Vapor barrier paper walls	Location: Exterior walls (behind stucco walls) Scope of Impact: Exterior concrete walkway removal at landing of Rooms 37 and 38	2407-0635 to 2407-0637 (07/01/24)
d. Wood varnish baseboards	Location: Rooms 37 and 38 Scope of Impact: Removal of classroom 38 sink & cabinet	Non-suspect

3. Recommendations for handling ACM and/or ACCM:
   a. **Non-ACM** 12”x12” light brown floor tile with associated **ACM** black mastic
      1) All Abatement work shall be performed by an LAUSD Approved Contractor according to the current District Specification Section 02 8213 “Asbestos Abatement and Asbestos Related Disturbance” under the supervision of the FETU or by a District approved Environmental Consultant.
   b. **Non-ACM** 12”x12” brown floor tile with associated **Non-ACM** adhesive and **ACM** black mastic – patch
      1) All Abatement work shall be performed by an LAUSD Approved Contractor according to the current District Specification Section 02 8213 “Asbestos Abatement and Asbestos Related Disturbance” under the supervision of the FETU or by a District approved Environmental Consultant.
4. General Notes:
   a) No attics will be impacted.
   b) No crawlspace in the building.
   c) Ceiling spaces will not be impacted.
   d) Flooring is on concrete substrate Rooms 37 and 38. Scope of work is limited to the removal of sink and cabinets in classrooms.
   e) Flooring is present below sink and cabinets. No sink coating/mastic present below sink.
   f) Building (004DAN) Rooms 37 and 38 total of four (4) wood doors were checked by CNS on 7/01/24 and no suspect materials observed.
   g) Total of two (2) screwed on mirrors were observed to be present in Rooms 37 and 38 by CNS on 07/01/24. No mirror mastic present.
5. Where painted surfaces are impacted (Assumed lead-based paint) the work shall be performed in accordance with LAUSD Specification, Section 02 8333 (Lead Abatement and Lead Related Construction Work) and must be performed a RRP Certified Firm and by RRP trained personnel qualified in the techniques of lead-related construction, handling, disposal of lead containing materials, and in accordance with Environmental Protection Agency (EPA) and Renovation, Repair, and Painting (RRP). See Section VI for additional information.

E. Building C (005DAN)

1. Asbestos-Containing Materials (ACM >1%) and Asbestos-Containing Construction Materials (ACCM >0.1%) anticipated to be disturbed during the project:

MATERIALS	LOCATION	SAMPLE NO.
a. **Non-ACM** 12”x12” light brown floor tile with associated **ACM** black mastic (on concrete substrate)	Location: Rooms 28, 29 ,30 Scope of Impact: Minor impact during removal of door and door threshold in Room 30	92878 to 992880 (11/18/95)
b. **ACM** 12”x12” gold floor tile with associated **ACM** black mastic (on concrete substrate)	Location: Rooms 26 & 27 Scope of Impact: Removal of Room 27 sink & cabinets and removal of door and door threshold	992881 to 992883 (11/18/95)
c. ACM pipe insulation elbows (good condition)	Location: Girl’s and boy’s restroom ceiling space Scope of Impact: No impact – for information purposes	924113 to 924115 (06/01/90)
d. ACM pipe insulation mud (good condition)	Location: Water heater closet Scope of Impact: No impact – for information purposes	0901-0232 (12/10/08)
e. Assumed ACM mirror mastic associated with wall mounted mirror	Location: Faculty restroom Scope of Impact: Removal prior to restroom upgrades	**Assumed ACM**

2. Non-Asbestos-Containing Materials (Non-ACM) anticipated to be disturbed during the project:

MATERIALS	LOCATION	SAMPLE NO.
a. Sand plaster walls	Location: Rooms 26, 27, 28, 29, 30, faculty restroom, boy’s restroom, and girl’s restroom Scope of Impact: Removal of Rooms 27 & 30 sink & cabinets, doors with hardware, and faculty & boys restroom upgrades	992858 to 992860 (11/18/95) 0406-0520 to 0406-0522 (06/02/04)

MATERIALS	LOCATION	SAMPLE NO.
b. Stucco walls	Location: Exterior walls Scope of Impact: Removal of exterior drinking fountain	924110 to 924112 (06/01/90)
c. 12”x12” straight ceiling tiles (nailed-on)	Location: Faculty restroom and boys restroom Scope of Impact: Restroom upgrades	992869 (11/18/95) 0610-1554 to 0610-1556 (10/30/06)
d. Joint compound associated with wood walls	Location: Boys restroom (northwest area) Scope of Impact: Restroom upgrades	2407-0647 to 2407-0649 (07/01/24)
e. Ceiling barrier paper (above ceiling tiles)	Location: Faculty restroom and boys restroom Scope of Impact: Restroom upgrades	992873 (11/18/95) 0610-1557 to 0610-1559 (10/30/06)
f. 1”x1” brown ceramic floor tile with associated grout (on concrete substrate)	Location: Faculty restroom Scope of Impact: Restroom upgrades	2407-0638 to 2407-0640 (07/01/24)
g. Mixed size mosaic green and light green floor tile with associated grout (on concrete substrate)	Location: Boy’s restroom Scope of Impact: Restroom upgrades	2407-0641 to 2407-0643 (07/01/24)
h. 4”x4” white ceramic wall tile with associated grout and mortar	Location: Boy’s restroom Scope of Impact: Restroom upgrades	2407-0644 to 2407-0646 (07/01/24)
i. Vapor barrier paper walls	Location: Exterior walls (behind stucco walls) Scope of Impact: Removal of exterior drinking fountain	2407-0650 to 2407-0652 (07/01/24)
j. Wood varnish baseboards	Location: Rooms 27 and 30 Scope of Impact: Removal of sinks and cabinets	Non-suspect

3. Recommendations for handling ACM and/or ACCM:
   a. **Non-ACM** 12”x12” light brown floor tile with associated **ACM** black mastic (on concrete substrate)
      1) Minor disturbances that are 3 square feet or 3 linear feet or less per impact area and not to disturb 100 square feet or greater cumulatively on any one project can be performed by AHERA 16 Hour O & M trained personnel. These disturbances shall be in accordance with LAUSD Specification Section 02 8213 – Asbestos Abatement and Asbestos Related Disturbance.
   b. **ACM** 12”x12” gold floor tile with associated **ACM** black mastic (on concrete substrate)
      1) All Abatement work shall be performed by an LAUSD Approved Contractor according to the current District Specification Section 02 8213 “Asbestos Abatement and Asbestos Related Disturbance” under the supervision of the FETU or by a District approved Environmental Consultant.
   c. **Assumed ACM** mirror mastic associated with wall mounted mirror
      1) Minor disturbances that are 3 square feet or 3 linear feet or less per impact area and not to disturb 100 square feet or greater cumulatively on any one project can be performed by AHERA 16 Hour O & M trained personnel. These disturbances shall be in accordance with LAUSD Specification Section 02 8213 – Asbestos Abatement and Asbestos Related Disturbance.
4. General Notes:
   a) No attic space in the building.
   b) No crawlspace in the building.
   c) Ceiling void space above classrooms contains non-suspect fiberglass batting insulation.
   d) Flooring is on concrete substrate throughout. Flooring was observed to be present below classroom sink & cabinets by CNS. No sink coating/mastic present below sink.
   e) **ACM** pipe insulation elbows are in good condition in restroom ceiling space.
   f) Inaccessible wall cavities of restrooms shall be checked prior to wall openings and restroom upgrades.
   g) Building (004DAN) Rooms 27, 30, boy’s restroom, & faculty restroom total of six (6) wood doors were checked by CNS on 7/01/24 and no suspect materials observed.

h) Faculty restroom was observed to have one (1) mirror with **Assumed ACM** mirror mastic.

i) Total of two (2) screwed on mirrors in Rooms 27 and 30 were observed by CNS on 07/01/24. No mirror mastic present.

j) No mirrors observed to be present in boy's restroom.

5. Where painted surfaces are impacted (Assumed lead-based paint) the work shall be performed in accordance with LAUSD Specification, Section 02 8333 (Lead Abatement and Lead Related Construction Work) and must be performed a RRP Certified Firm and by RRP trained personnel qualified in the techniques of lead-related construction, handling, disposal of lead containing materials, and in accordance with Environmental Protection Agency (EPA) and Renovation, Repair, and Painting (RRP). See Section VI for additional information.

F. Building D (006DAN)

1. Asbestos-Containing Materials (ACM >1%) and Asbestos-Containing Construction Materials (ACCM >0.1%) anticipated to be disturbed during the project:

MATERIALS	LOCATION	SAMPLE NO.
a. Top layer: **Non-ACM** 12”x12” blue and **Non-ACM** 12”x12” light blue – mixed – floor tiles with associated **Non-ACM** adhesive over Bottom layer: **Non-ACM** gray leveling material with **Non-ACM** white encapsulation material and **ACM** black mastic (on concrete substrate)	Location: Room 39 Scope of Impact: Minor impact during door threshold removal	2407-1481 to 2407-1483 (07/11/24)
b. **Assumed ACM** pipe insulation elbows (good condition)	Location: Ceiling space above restrooms and plant manager office Scope of Impact: No impact – for information purposes	**Assumed ACM**

2. Non-Asbestos-Containing Materials (Non-ACM) anticipated to be disturbed during the project:

MATERIALS	LOCATION	SAMPLE NO.
a. Sand plaster walls	Location: Room 39, boy’s restroom, girls restroom, ball room (behind wall panels), plant manager’s office, heater room, and faculty restroom Scope of Impact: Removal of exterior drinking fountain and restroom upgrades	993213 to 993215 (11/21/95)

MATERIALS	LOCATION	SAMPLE NO.
b. 12”x12” straight ceiling tiles (nailed-on)	Location: Faculty restroom, ball room, and Room 39 Scope of Impact: Restroom upgrade and removal of ceiling tiles in ball room for ceiling upgrades	0610-1560 to 0610-1562 (10/30/06)
c. Dust barrier paper	Location: Above ceiling tiles in faculty restroom, ball room, girls restroom, and Room 39 Scope of Impact: Restroom upgrades and removal of ceiling tiles in ball room for ceiling upgrades	0610-1563 to 0610-1565 (10/30/06)
d. Stucco walls	Location: Exterior walls Scope of Impact: Removal of exterior drinking fountain and door with door hardware installation	992845 (11/18/95) 0201-0581 to 0201-0582 (01/04/02) by Point Count
e. Vapor barrier paper walls	Location: Exterior walls (behind stucco walls) Scope of Impact: Removal of exterior drinking fountain and door with door hardware installation	2407-1490 to 2407-1492 (07/11/24)
f. 4”x4” white ceramic wall tile with grout and mortar	Location: Boy’s restroom and girl’s restroom Scope of Impact: Restroom upgrades and installation of new fire alarm system wiring	2407-1487 to 2407-1489 (07/11/24)
g. Mixed size mosaic green and light green ceramic floor tile with grout (on concrete substrate)	Location: Faculty restroom, boy’s restroom, and girl’s restroom Scope of Impact: Restroom upgrades	2407-1484 to 2407-1486 (07/11/24)
h. Wood ceilings (no compound)	Location: Boy’s restroom and girl’s restroom Scope of Impact: Restroom upgrades	Non-suspect
i. Wood varnished baseboards	Location: Ball room and Room 39 Scope of Impact: Removal for ADA improvements	Non-suspect

3. Recommendations for handling ACM and/or ACCM:
   d. Top layer: **Non-ACM** 12”x12” blue and **Non-ACM** 12”x12” light blue – mixed – floor tiles with associated **Non-ACM** adhesive over Bottom layer: **Non-ACM** gray leveling material with **Non-ACM** white encapsulation material and **ACM** black mastic
      1) Minor disturbances that are 3 square feet or 3 linear feet or less per impact area and not to disturb 100 square feet or greater cumulatively on any one project can be performed by AHERA 16 Hour O & M trained personnel. These disturbances shall be in accordance with LAUSD Specification Section 02 8213 – Asbestos Abatement and Asbestos Related Disturbance.

4. General Notes:
   a) No attic in the building.
   b) No crawlspace in the building.
   c) Ceiling void space is currently inaccessible. Contractor shall check areas prior to ceiling system improvements.
   d) Flooring substrate is on concrete substrate throughout. No flooring observed below permanent cabinets in ball room.
   e) Wall cavities in restrooms are currently inaccessible. CNS observed non-suspect fiberglass pipe insulation from small wall hatch. Contractor shall check all wall cavities prior to wall openings.
   f) Building (006DAN) Room 39, storage room, girl’s restroom, & boy’s restroom total of five (5) wood doors were checked by CNS on 7/11/24 and no suspect materials observed.
   g) No mirrors observed to be present in boy’s restroom and girl’s restroom.

5. Where painted surfaces are impacted (Assumed lead-based paint) the work shall be performed in accordance with LAUSD Specification, Section 02 8333 (Lead Abatement and Lead Related Construction Work) and must be performed a RRP Certified Firm and by RRP trained personnel qualified in the techniques of lead-related construction, handling, disposal of lead containing materials, and in

accordance with Environmental Protection Agency (EPA) and Renovation, Repair, and Painting (RRP). See Section VI for additional information.

G. Kindergarten Building (007DAN)

1. Asbestos-Containing Materials (ACM >1%) and Asbestos-Containing Construction Materials (ACCM >0.1%) anticipated to be disturbed during the project:

MATERIALS	LOCATION	SAMPLE NO.
a. **Non-ACM** 12”x12” light blue floor tile with associated **ACM** black mastic (on concrete substrate)	Location: Rooms 22 and 23 Scope of Impact: Minor impact during door threshold removal	2407-1496 to 2407-1498 (07/11/24)

2. Non-Asbestos-Containing Materials (Non-ACM) anticipated to be disturbed during the project:

MATERIALS	LOCATION	SAMPLE NO.
a. Sand plaster walls	Location: Rooms 22, 23, and Tot’s restroom Scope of Impact: Restroom upgrades and partial cabinet removal in Room 23	992861 to 992863 (11/18/95)
b. Stucco walls	Location: Exterior walls Scope of Impact: Removal of exterior drinking fountain	992846 (11/18/95) 0201-0523 to 0201-0524 (01/04/02)
c. Mixed size mosaic green and light green ceramic floor tile with grout (on concrete substrate)	Location: Tots restroom Scope of Impact: Restroom upgrades	2407-1493 to 2407-1495 (07/11/24)
d. Vapor barrier paper walls	Location: Exterior walls (behind stucco walls) Scope of Impact: Removal of exterior drinking fountain	2407-1499 to 2407-1501 (07/11/24)

3. Recommendations for handling ACM and/or ACCM:
   a. **Non-ACM** 12”x12” light blue floor tile with associated **ACM** black mastic
      1) Minor disturbances that are 3 square feet or 3 linear feet or less per impact area and not to disturb 100 square feet or greater cumulatively on any one project can be performed by AHERA 16 Hour O & M trained personnel. These disturbances shall be in accordance with LAUSD Specification Section 02 8213 – Asbestos Abatement and Asbestos Related Disturbance.
4. General Notes:
   a) No attic space in the building.
   b) No crawlspace in the building.
   c) Ceiling void space is observed to contain non-suspect fiberglass batting insulation.
   d) Flooring is on concrete substrate.
   e) Tots restroom wall cavities are inaccessible and contractor shall check areas prior to wall openings.
   f) Building (007DAN) Rooms 22, 23, & tot’s restroom total of six (6) wood doors were checked by CNS on 7/11/24 and no suspect materials observed.
   g) One (1) screwed on mirror in tot’s restroom was observed by CNS on 07/11/24. No mirror mastic present.
5. Where painted surfaces are impacted (Assumed lead-based paint) the work shall be performed in accordance with LAUSD Specification, Section 02 8333 (Lead Abatement and Lead Related Construction Work) and must be performed a RRP Certified Firm and by RRP trained personnel qualified in the techniques of lead-related construction, handling, disposal of lead containing materials, and in accordance with Environmental Protection Agency (EPA) and Renovation, Repair, and Painting (RRP). See Section VI for additional information.

H. 2/3 Unit Relocatable (X3495Y)

1. Asbestos-Containing Materials (ACM >1%) and Asbestos-Containing Construction Materials (ACCM >0.1%) anticipated to be disturbed during the project:

   No ACM or ACCM will be impacted

2. Non-Asbestos-Containing Materials (Non-ACM) anticipated to be disturbed during the project:

MATERIALS	LOCATION	SAMPLE NO.
a. Drywall behind fiberboard panels (no joint compound)	Location: Rooms 18 and 19 Scope of Impact: Sink and cabinet removal in Room 19	0611-1064 to 0611-1066 (11/14/06)
b. 12”x12” white floor tile with adhesive (core) on wood substrate	Location: Rooms 18 and 19 Scope of Impact: Sink and cabinet removal in Room 19	2407-1505 to 2407-1507 (07/11/24)
c. 4” brown cove base with adhesive	Location: Rooms 18 and 19 Scope of Impact: Sink and cabinet removal in Room 19	2407-1508 to 2407-1510 (07/11/24)
d. Fiberboard wall panels	Location: Rooms 18 and 19 Scope of Impact: Sink and cabinet removal in Room 19	2407-1511 to 2407-1513 (07/11/24)

3. Recommendations for handling ACM and/or ACCM:

   No ACM or ACCM will be impacted

4. General Notes:

   a) No attics in the building.

   b) Crawlspaces is inaccessible. Crawlspace shall be protected in place during the removal of sink and cabinets in Room 19. No

sink coating/mastic under sink is present.

c) Drop ceiling contains non-suspect fiberglass batting insulation and shall not be disturbed.

d) Flooring is on wood substrate and cored through in Rooms 19 and 18.

e) Scope of work is limited to removal of sink and cabinet in Room 19.

5. Where painted surfaces are impacted (Assumed lead-based paint) the work shall be performed in accordance with LAUSD Specification, Section 02 8333 (Lead Abatement and Lead Related Construction Work) and must be performed a RRP Certified Firm and by RRP trained personnel qualified in the techniques of lead-related construction, handling, disposal of lead containing materials, and in accordance with Environmental Protection Agency (EPA) and Renovation, Repair, and Painting (RRP). See Section VI for additional information.

V. General Recommendations and Notes

All suspect construction materials not identified above are presumed asbestos-containing. All attics and crawl spaces not specified herein as clear for normal access and ceiling spaces not inspected and identified as absent of contamination are to be considered asbestos-contaminated areas. If materials not identified in this report will be disturbed or if attics, crawl spaces or ceiling spaces not identified in this report as clear of contamination are to be accessed during construction, notify IOR or OAR. They will contact the Facilities Environmental Technical Unit for further direction prior to disturbance of these materials or access of the contaminated spaces.

If any additional known, presumed, or suspected asbestos-containing materials are discovered during construction. The Contractor shall immediately stop all work and then contact the FETU and the project Environmental Consultant to determine the proper course of action.

The Contractor shall take care when demolishing materials which will open wall cavities, sealed ceiling areas, covered trenches, and in general, areas which were inaccessible during the limited asbestos inspection. If any additional known, presumed, or suspected asbestos-containing materials are discovered during the renovation, the Contractor shall immediately stop all work and then contact the FETU and the project Environmental Consultant to determine the proper course of action.

VI. Lead Related Construction / Impact to Coated Surfaces

A. Renovation, repair or painting work performed on all buildings regardless of the date of construction shall require special handling and environmental monitoring when coated surfaces including, but not limited to, painted, varnished, and glazed surfaces are impacted. All coated surfaces are assumed to be lead-based. All work shall be performed in compliance with Specification, Section 02 8333, "Lead Abatement and Lead Related Construction Work." XRF testing methodology is not acceptable in determining negative for lead content for Cal/OSHA compliance purposes, except for notification requirements. XRF may be used in determining lead-based paint for compliance with the U.S.E.P.A. Renovator, Repair, and Painting Rule. Disturbance of coated surfaces by contractors will be monitored by qualified District staff or Environmental Consultant sufficient to ensure that proper training and work procedures, cleanup, and waste handling are employed.

B. Loose or flaky paint that will be disturbed during the work of this project or in close proximity of the work area shall be stabilized by removing the loose or flaky paint and leaving only paint in stable condition.

C. It should be noted that any coated surfaces and building materials not listed above are to be considered to be lead-based and asbestos-containing respectively. Should the project require the disturbance of these surfaces and building materials, the FETU shall be notified.

D. Paint waste shall not be commingled with asbestos waste.

E. The RRP firm certified contractor shall provide RRP trained renovators as defined in the district specification and as described in 40 CFR 745.

F. Prior to the start of lead related work, The contractor or subs conducting lead related work must provide the Renovate Right Pamphlet, written general description of the project with start and end dates and area/areas to be impacted to the OAR for submission to the site administrator. The OAR must inform the site administrator of the requirement to post this information and pamphlet in a conspicuous place such as the Main Office.

G. Obtain the site administrator's signature, documenting receipt of the pamphlet and informational posting. This form must be retained by the contractor for a minimum of 3 years. The posting must inform parents and staff how to obtain a copy or access the pamphlet.

H. Upon completion of lead related activities and successful visual inspection, the Certified Renovator must perform post-renovation cleaning verification in accordance to EPA. When performing visual cleaning verification, the cleaning cloth must be compared to post-renovation cleaning verification card.

If any changes occur in the scope of work, notify the Consultant or the FETU immediately before further commencement of work.

This report may not be changed, modified or include additions without the express written permission from the FETU.

If you have any questions regarding this report, contact the FETU at (213) 745-1450.

Signatures below certify that the information contained herein has been proofread and is technically accurate.

Edward D. Spinney, CAC #00-2795

Ahmad Abdollahian, CAC #02-3251

VII. Confidentiality and Limitations

CNS's findings, conclusions and recommendations found in this report are based on the information that was made available to CNS on July 19, 2024. The information in this report is relevant to the date of the site visit and should not be relied on to represent conditions at any later date. The opinions and conclusions expressed in this report are based on information obtained during our assessment and on our experience and current standards of technical practice.

CNS makes no other warranties, either express or implied, concerning the completeness of the data furnished to us. CNS cannot be responsible for conditions or consequences arising from relevant facts that were concealed, withheld, or not fully disclosed at the time our assessment was undertaken. CNS is neither responsible nor liable for work, testing or recommendations performed or provided by others.

This Asbestos Engineering Assessment Report is not and should not be construed as a warranty or guarantee about the presence or absence of environmental hazards or contaminants that may affect the subject site. Facts, conditions, and acceptable risk factors change with time; accordingly, this report should be viewed within this context.

CNS ENVIRONMENTAL, INC.

To:
Mr. Saten Mkrtchian
Los Angeles Unified School District
Asset Management – Facilities Planning & Development
333 South Beaudry Avenue, 23rd Floor
Los Angeles, California 90017

Ms. Greta Galoustian
Los Angeles Unified School District
Facilities Environmental Technical Unit
1240 South Naomi Avenue, 2nd Floor
Los Angeles, California 90021

ASBESTOS ENGINEERING ASSESSMENT
Bassett Street Elementary School (2323)
15756 Bassett Street
Lake Balboa, California 91406
ADA Improvements - Asphalt
Report 2 of 2
Project/Colin#: 10373370; Project WO#: 38050577
Contract #2290037 / SAP# 4400010136

CNS Environmental Project Number: 24-296

Date Prepared: July 22, 2024

Edward D. Spinney, CAC #00-2795

Ahmad Abdollahian, CAC #02-3251

650 North Rose Drive, Suite 616
Placentia, California 92870

Phone #: (714) 525-5115
Fax #: (714) 526-5445

TABLE OF CONTENTS

Section	Title	Page
i.	FETU Approval Letter	2
ii.	List of Acronyms	3
iii.	List of Definitions	4
I.	Executive Summary, Introduction, Purpose, and Scope of Services	5
II.	Scope of Work	6
III.	Visual Survey, Sampling Methodology, and Analytical Procedures	7
IV.	Discussion of Survey Findings and Recommendations	8
V.	General Recommendations and Notes	12
VI.	Lead Related Construction / Impact to Coated Surfaces	13
VII.	Confidentiality and Limitations	15

Appendices

Appendix A Analytical Results from Samples

Appendix B Asbestos Survey Form A

Appendix C Consultant's Certifications

Appendix D Scope of Work

Los Angeles Unified School District
Facilities Services Division

OFFICE OF THE SUPERINTENDENT **FACILITIES SERVICES DIVISION**

July 26th, 2024

CNS Environmental, Inc.
ATTN: Edward D. Spinney
650 North Rose Drive, Suite 616
Placentia, CA 9192870201

RE: PHASE _I_____ REVIEW AND APPROVAL FOR ASBESTOS __X__ and/or LEAD __X_____

The Facilities Environmental Technical Unit (FETU) has reviewed and approved your Phase ____I_____ document(s) for the project listed below.

School: Bassett Street Elementary School School Code # 2323

Project: ADA Improvements and Asphalt Project Colin No. 10373370

Date of Report: July 22nd, 2024 Maximo Work Order No. 38050577

If you have any questions regarding this approval, please call the FETU at (213) 745-1450.

Sincerely,

Jennie Tran

Jennie Tran
Sr. Asbestos Abatement Worker
Facilities Environmental Technical Unit

Greta Galoustian, Facilities Environmental Technical Manager
Kwun Yang, FETU Analyst

LIST OF ACRONYMS
for Asbestos

ACM	Asbestos-Containing Material
ACBM	Asbestos-Containing Building Material
ACCM	Asbestos-Containing Construction Material (California only)
AHERA	Asbestos Hazard Emergency Response Act
CAC	California Asbestos Consultant
Cal/OSHA	California Division of Occupational Safety and Health
CCR	California Code of Regulations
CSST	California Site Surveillance Technician
CFR	Code of Federal Regulations
EPA	Environmental Protection Agency
FETU	Facilities Environmental Technical Unit (LAUSD)
HEPA	High Efficiency Particulate Air
HVAC	Heating, Ventilation, and Air Conditioning
LAUSD	Los Angeles Unified School District
NEA	Negative Exposure Assessment
NESHAP	National Emission Standards for Hazardous Air Pollutants
OEHS	Office of Environmental Health & Safety (LAUSD)
PEL	Permissible Exposure Limit
PLM	Polarized Light Microscopy
RACM	Regulated Asbestos-Containing Material
SCAQMD	South Coast Air Quality Management District

LIST OF DEFINITIONS
for Asbestos

Abatement: Control/elimination of asbestos through operations and maintenance, repair, enclosure, encapsulation, or removal.

Amended Water: Water to which a surfactant (wetting agent) has been added to increase the ability of the liquid to penetrate ACM.

Asbestos: Asbestiform varieties of Chrysotile (serpentine), crocidolite (riebeckite), amosite (cummingtonitegrunerite), anthophyllite tremolite, and actinolite.

Asbestos-Containing Material (ACM): Material or product containing more than one percent (1%) asbestos

Asbestos-Containing Building Material (ACBM): Surfacing ACM, thermal system insulation ACM, or miscellaneous ACM that is found in or on interior structural members or other parts of a school building.

Asbestos-Containing Construction Material (ACCM): For California only. Manufactured construction material that contains more than one-tenth of one percent (0.1%) asbestos by weight.

Building ID Number or Code: Six-digit alphanumeric identification code assigned to each building on a site; sometimes referred to as the insurance code, ID number, or other similar terms.

District: The Los Angeles Unified School District and its representatives.

Friable: Used in reference to a school building material which, when dry, may be crumbled, pulverized, or reduced to powder by hand pressure.

High Efficiency Particulate Air (HEPA): Filter or system capable of removing particulates of 0.3 microns or larger from air at 99.97 percent or greater efficiency.

Nonfriable: Used in reference to a school building material which, when dry, may not be crumbled, pulverized, or reduced to powder by hand pressure.

Plasticize: To cover floors, ceilings, and walls with plastic (polyethylene) sheeting.

Regulated Area: Area established by the employer (abatement contractor) to demarcate where asbestos work is conducted, and by the adjoining area where debris and waste from such asbestos work accumulate; a work area within which airborne concentrations of asbestos exceed or may exceed (with reasonable possibility) the permissible exposure limit.

I. Executive Summary, Introduction, Purpose, and Scope of Services

This Asbestos Engineering Assessment Report has been prepared by CNS Environmental, Inc., (CNS) for the upcoming ADA Improvements Project at the Bassett Street Elementary School (2323), located at 15756 Bassett Street, Lake Balboa, California 91406.

The Asbestos Engineering Assessment Report was requested by Ms. Jennie Tran of the Los Angeles Unified School District (LAUSD) Facilities Environmental Technical Unit on June 25, 2024. The Asbestos Engineering Assessment was performed on July 12, 2024, by Mr. Eric Bracamontes, a California Division of Occupational Safety and Health, Certified Site Surveillance Technician, (#17-5970) under the supervision Mr. Ahmad Abdollahian, a California Division of Occupational Safety and Health, Certified Asbestos Consultant, (#02-3251).

Purpose:

CNS was contacted to review the project addressed in this report to determine the impact the project will have on asbestos and lead containing materials during the demolition, renovation, and construction activities. This report addresses these impacts and provides recommendation for appropriate handling and abatement (where required) of these materials.

Scope of Services:

CNS reviewed the Scope of Work as well as Drawings and Specification (where provided) to identify the extent of the project including, but not limited to, the buildings, rooms, and spaces in or on the buildings, and surfaces and materials to be impacted. The Asbestos Management Plan for the site was reviewed to determine if the existing buildings, rooms, spaces, and materials had been tested and if these contained asbestos. A field inspection was conducted to determine the condition of the asbestos-containing building materials and to verify that all materials to be impacted were identified in the Asbestos Management Plan. When materials to be impacted were identified on site but not included in the Asbestos Management Plan and material in the Asbestos Management Plan were assumed to be asbestos-containing or if the materials listed as non-ACBM could not be substantiated by sample results in the Plan or the FETU files, then additional samples were collected and the results are incorporated in this report.

Recommendations are also provided for the appropriate handling and abatement (where required) of the impacted ACBM.

II. Scope of Work

The asbestos engineering assessment performed was limited only to the areas involved in, and building materials impacted by the scope of work for the above referenced project.

The following buildings are impacted by the scope of work:

Exterior Grounds (2323-G)
Remove and replace asphalt paving

The project will involve the ADA improvements in the Buildings listed above. Scope of work will include exterior asphalt paving removal and abating any ACCM by an LAUSD approved certified asbestos abatement contractor.

III. Visual Survey, Sampling Methodology, and Analytical Procedures

VISUAL SURVEY:

A visual survey consisting of a walkthrough and visual inspection of the project area was conducted to determine the presence of suspect materials that were accessible and/or exposed in the areas that may be disturbed during the project. This included the identification of suspect asbestos containing building components and the determination of the condition of those components.

SAMPLING METHODOLOGY:

Samples were collected under the supervision of a California Certified Asbestos Consultant following AHERA protocol. Selected samples of exposed and/or accessible materials were identified as suspect materials that are commonly found to contain asbestos, which include Surfacing Materials, Thermal System Insulation, and Miscellaneous Materials. The EPA 3-5-7 Rule was used when sampling Surfacing Materials and three samples were taken from each suspect Thermal System Insulation and Miscellaneous Material that might be affected by the proposed work to be performed. Suspect materials were grouped into homogenous sampling areas, which were limited in area to within a structure as defined by the six-digit building identification code. At the time of sampling, the location and condition (friable or non-friable) of the material was noted. Where wood substrates exist in the building, sampling will include the coring of said floor to determine if any hidden suspect asbestos containing layers are present.

ANALYTICAL PROCEDURES:

The bulk samples were analyzed by Polarized Light Microscopy (PLM), with dispersion staining as described by the interim method of the determination of asbestos in bulk insulation, Federal Register, 59 FR 542, Jan. 5, 1994; and 59 FR 58970, Aug. 1, 1994. This is a standard method of analysis in optical mineralogy and the currently accepted method for the determination of asbestos in bulk samples. A suspect material is immersed in a solution of known refractive index and subjected to illumination by polarized light. The characteristic color display results enable mineral identification. It should be noted that some asbestos containing materials might not be accurately identified and/or quantified by PLM. As an example, the original fabrication of vinyl floor tiles routinely involved milling of asbestos fibers to extremely small sizes. As a result, these fibers may go undetected under the standard polarized light microscopy method. Transmission Electron Microscopy (TEM) may be necessary for a more definitive analysis of these materials.

A material is considered to be asbestos-containing if at least one sample collected from the area shows asbestos present in an amount greater than one-tenth of one percent by weight (>0.1%). Asbestos-containing materials are regulated by federal, state, and local agencies. The EPA National Emission Standards for Hazardous Air Pollutants (NESHAP) requires an inspection for asbestos be done on facilities which are to undergo demolition or renovation work. Materials found to contain asbestos may need to be removed prior to the start of such demolition/renovation work.

IV. Discussion of Survey Findings and Recommendations

Asbestos containing materials were found in the buildings. The tables below include materials that are anticipated to be impacted during the project.

CNS Environmental's findings are as follows:

A. Exterior Grounds (2323-G)

1. Asbestos-Containing Materials (ACM >1%) and Asbestos-Containing Construction Materials (ACCM >0.1%) anticipated to be disturbed during the project:

MATERIALS	LOCATION	SAMPLE NO.
a. **ACCM** Asphalt paving (core)	Location: Area "F" Scope of Impact: Removal of asphalt paving	2212-0696 to 2212-0698 (12/19/22) 2407-1242 to 2407-1244 (07/12/24) by point count

2. Non-Asbestos-Containing Materials (Non-ACM) anticipated to be disturbed during the project:

MATERIALS	LOCATION	SAMPLE NO.
a. Asphalt paving (core)	Location: Area "A" – north parking lot Scope of Impact: Removal of asphalt paving	2407-1222 to 2407-1224 (07/12/24)
b. Asphalt paving – patch (core)	Location: Area "B" – patch #1 Scope of Impact: Removal of asphalt paving	2407-1225 to 2407-1227 (07/12/24)
c. Asphalt paving (core)	Location: Area "C" – kindergarten play area Scope of Impact: Removal of asphalt paving	2407-1228 to 2407-1230 (07/12/24)
d. Asphalt paving (core)	Location: Area "D" Scope of Impact: Removal of asphalt paving	2205-1309 to 2205-1315 (06/06/22) 2407-1231 to 2407-1232 (07/12/24)
e. Asphalt paving – patch (core)	Location: Patch #2 in Area "D" Scope of Impact: Removal of asphalt paving	2407-1233 to 2407-1235 (07/12/24)
f. Asphalt paving – patch (core)	Location: Patch #3 in Area "D" Scope of Impact: Removal of asphalt paving	2407-1236 to 2407-1238 (07/12/24)

MATERIALS	LOCATION	SAMPLE NO.
g. Asphalt paving (core)	Location: Area "E" Scope of Impact: Removal of asphalt paving	2407-1239 to 2407-1241 (07/12/24)
h. Asphalt paving – patch (core)	Location: Patch #4 in Area "F" Scope of Impact: Removal of asphalt paving	2407-1245 to 2407-1247 (07/12/24)
i. Asphalt paving (core)	Location: Area "G" Scope of Impact: Removal of asphalt paving	2407-1248 to 2407-1252 (07/12/24)
j. Asphalt paving – patch (core)	Location: Patch #5 in Area "G" Scope of Impact: Removal of asphalt paving	2407-1253 to 2407-1255 (07/12/24)
k. Asphalt paving – patch (core)	Location: Patch #6 in Area "G" Scope of Impact: Removal of asphalt paving	2407-1256 to 2407-1258 (07/12/24)
l. Asphalt paving (core)	Location: Area "H" Scope of Impact: Removal of asphalt paving	2407-1259 to 2407-1261 (07/12/24)
m. Asphalt paving – patch (core)	Location: Patch #7 in Area "H" Scope of Impact: Removal of asphalt paving	2407-1262 to 2407-1264 (07/12/24)

3. Recommendations for handling ACM and/or ACCM:
   a. **ACCM** Asphalt paving (core)
      1) All Abatement work shall be performed by an LAUSD Approved Asbestos Abatement Contractor according to the current District Specification Section 02 8223 "Removal of Asbestos Containing Asphalt" and Phase 2 Report – Abatement Design (Project Manuel) under the supervision of the FETU or by a District approved Environmental Consultant.

4. General Notes:

    a) No buildings, exterior of buildings, and underground utilities are to be disturbed during asphalt removal.

5. Where painted surfaces are impacted (Assumed lead-based paint) the work shall be performed in accordance with LAUSD Specification, Section 02 8333 (Lead Abatement and Lead Related Construction Work) and must be performed a RRP Certified Firm and by RRP trained personnel qualified in the techniques of lead-related construction, handling, disposal of lead containing materials, and in accordance with Environmental Protection Agency (EPA) and Renovation, Repair, and Painting (RRP). See Section VI for additional information.

V. General Recommendations and Notes

All suspect construction materials not identified above are presumed asbestos-containing. All attics and crawl spaces not specified herein as clear for normal access and ceiling spaces not inspected and identified as absent of contamination are to be considered asbestos-contaminated areas. If materials not identified in this report will be disturbed or if attics, crawl spaces or ceiling spaces not identified in this report as clear of contamination are to be accessed during construction, notify IOR or OAR. They will contact the Facilities Environmental Technical Unit for further direction prior to disturbance of these materials or access of the contaminated spaces.

If any additional known, presumed, or suspected asbestos-containing materials are discovered during construction. The Contractor shall immediately stop all work and then contact the FETU and the project Environmental Consultant to determine the proper course of action.

The Contractor shall take care when demolishing materials which will open wall cavities, sealed ceiling areas, covered trenches, and in general, areas which were inaccessible during the limited asbestos inspection. If any additional known, presumed, or suspected asbestos-containing materials are discovered during the renovation, the Contractor shall immediately stop all work and then contact the FETU and the project Environmental Consultant to determine the proper course of action.

VI. Lead Related Construction / Impact to Coated Surfaces

A. Renovation, repair or painting work performed on all buildings regardless of the date of construction shall require special handling and environmental monitoring when coated surfaces including, but not limited to, painted, varnished, and glazed surfaces are impacted. All coated surfaces are assumed to be lead-based. All work shall be performed in compliance with Specification, Section 02 8333, "Lead Abatement and Lead Related Construction Work." XRF testing methodology is not acceptable in determining negative for lead content for Cal/OSHA compliance purposes, except for notification requirements. XRF may be used in determining lead-based paint for compliance with the U.S.E.P.A. Renovator, Repair, and Painting Rule. Disturbance of coated surfaces by contractors will be monitored by qualified District staff or Environmental Consultant sufficient to ensure that proper training and work procedures, cleanup, and waste handling are employed.

B. Loose or flaky paint that will be disturbed during the work of this project or in close proximity of the work area shall be stabilized by removing the loose or flaky paint and leaving only paint in stable condition.

C. It should be noted that any coated surfaces and building materials not listed above are to be considered to be lead-based and asbestos-containing respectively. Should the project require the disturbance of these surfaces and building materials, the FETU shall be notified.

D. Paint waste shall not be commingled with asbestos waste.

E. The RRP firm certified contractor shall provide RRP trained renovators as defined in the district specification and as described in 40 CFR 745.

F. Prior to the start of lead related work, The contractor or subs conducting lead related work must provide the Renovate Right Pamphlet, written general description of the project with start and end dates and area/areas to be impacted to the OAR for submission to the site administrator. The OAR must inform the site administrator of the requirement to post this information and pamphlet in a conspicuous place such as the Main Office.

G. Obtain the site administrator's signature, documenting receipt of the pamphlet and informational posting. This form must be retained by the contractor for a minimum of 3 years. The posting must inform parents and staff how to obtain a copy or access the pamphlet.

H. Upon completion of lead related activities and successful visual inspection, the Certified Renovator must perform post-renovation cleaning verification in accordance to EPA. When performing visual cleaning verification, the cleaning cloth must be compared to post-renovation cleaning verification card.

If any changes occur in the scope of work, notify the Consultant or the FETU immediately before further commencement of work.

This report may not be changed, modified or include additions without the express written permission from the FETU.

If you have any questions regarding this report, contact the FETU at (213) 745-1450.

Signatures below certify that the information contained herein has been proofread and is technically accurate.

Edward D. Spinney, CAC #00-2795

Ahmad Abdollahian, CAC #02-3251

VII. Confidentiality and Limitations

CNS's findings, conclusions and recommendations found in this report are based on the information that was made available to CNS on July 22, 2024. The information in this report is relevant to the date of the site visit and should not be relied on to represent conditions at any later date. The opinions and conclusions expressed in this report are based on information obtained during our assessment and on our experience and current standards of technical practice.

CNS makes no other warranties, either express or implied, concerning the completeness of the data furnished to us. CNS cannot be responsible for conditions or consequences arising from relevant facts that were concealed, withheld, or not fully disclosed at the time our assessment was undertaken. CNS is neither responsible nor liable for work, testing or recommendations performed or provided by others.

This Asbestos Engineering Assessment Report is not and should not be construed as a warranty or guarantee about the presence or absence of environmental hazards or contaminants that may affect the subject site. Facts, conditions, and acceptable risk factors change with time; accordingly, this report should be viewed within this context.

APPENDIX A: Analytical Results from Samples

BASSETT STREET ELEMENTARY SCHOOL (2323)
ADA IMPROVEMENTS
CNS ENVIRONMENTAL, INC

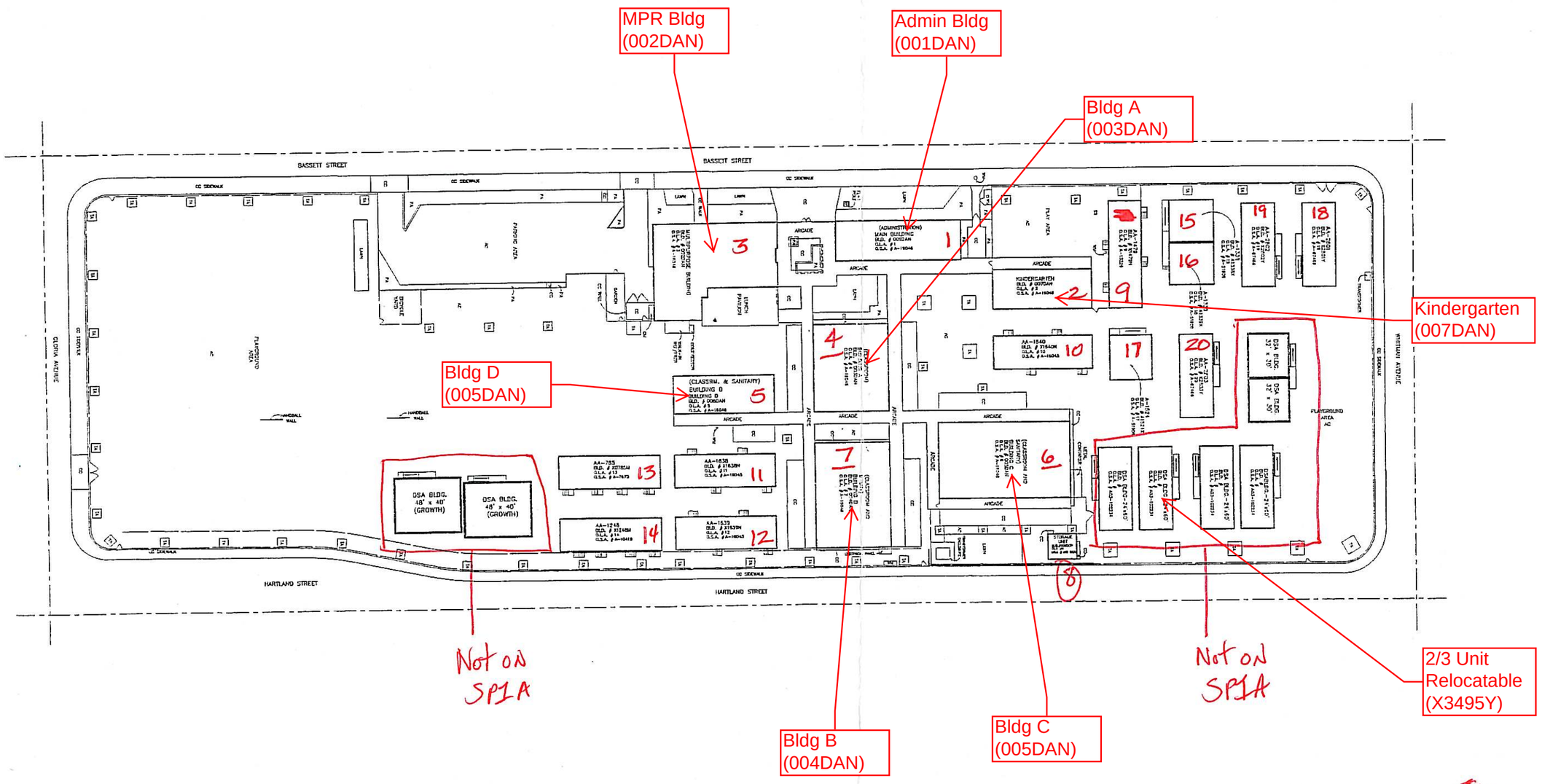

RELOCATABLE HOUSING UNIT
FACILITIES SERVICES DIVISION
333 S. GRAND AVENUE, 4th FLR
LOS ANGELES, CA 90071

LOS ANGELES UNIFIED SCHOOL DISTRICT · BOARD OF EDUCATION

PLOT PLAN

PROJECT

SCHOOL
BASSETT STREET SCHOOL
15756 BASSETT STREET
VAN NUYS, CA 91406

VERIFICATION		
NO.	DATE	BY
1	07-14-00	SJ

REVISIONS		
NO.	DATE	BY
1	08-28-00	JZI

LOCATION CODE 2323

DRAWN BY LM

DRAWING NO.

CHECKED BY

INDEX NO. 1 / 1

Multipurpose Bldg

LOS ANGELES SCHOOL DISTRICT
DIAGRAM OF BUILDING AREAS

SCHOOL: BASSETT STREET SCHOOL

ADDRESS: 15756 BASSETT STREET
VAN NUYS, CA 91406

DISTRICT: LOS ANGELES UNIFIED SCHOOL DISTRICT

LOCATION 2323

APPLICATION NO. 22/

DRAWING BAT03F1 (002DAN)

BUILDING 3

PLOT PLANS AND ALLOTMENTS UNIT
IBM TOWER - ROOM 420

ADA Improvements Project
Sampled By: CNS Eric Bracamontes
Sample Date: 07-01-24

Sample Material:

- ~~Moisture Barrier Paper~~ ~~(under wood floor)~~ EB Varnish Hard Wood Floor (core)
  Sample #: 01-03
- 12x12 DK. Blue, 12x12 Lt. Blue Floor Tile - Mixed w/ Adhesive (over concrete)
  Sample #: 04-06
- Blue / Lt. Blue Ceramic Floor Tile w/ Grout (over concrete)
  Sample #: 07-09
- Vapor Barrier Paper - walls
  Sample #: 10-12

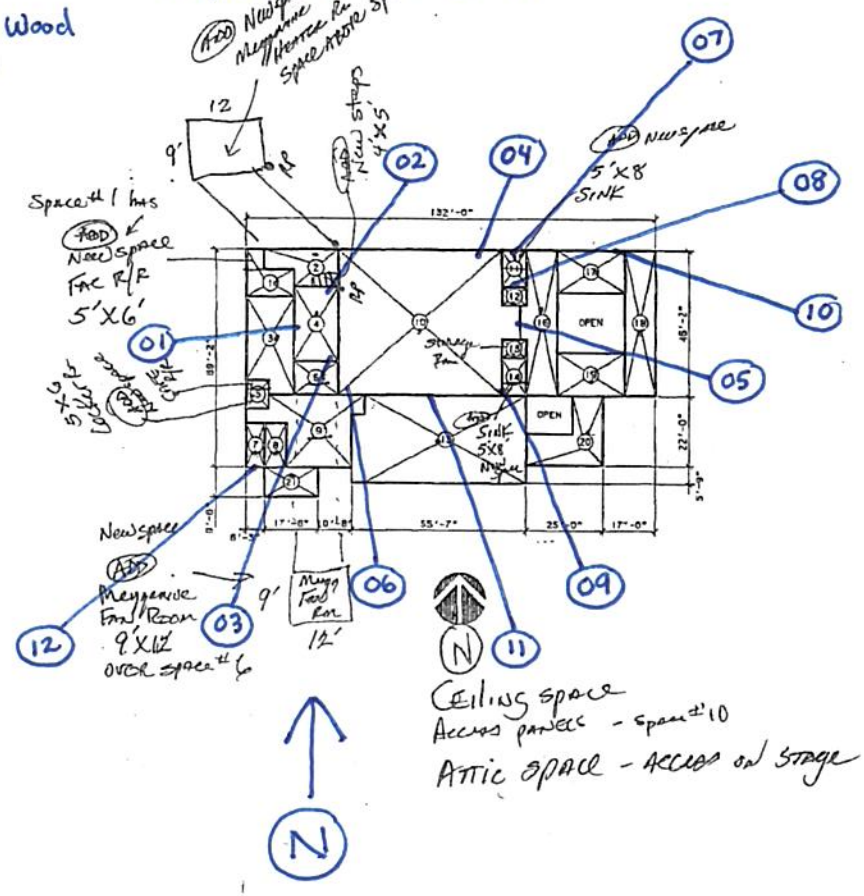

PLOT SCALE: 1"=30'-0"

AUTHORIZED AGENT
LOS ANGELES UNIFIED SCHOOL DISTRICT

DATE: 01/05/95
SHEET 7 OF 41 SHEETS

ADA Improvements
Sampled By: CNS Env. Eric Bracamontes
Sampled Date: 07-01-24
Sampled Material: Vapor Barrier paper-walls
Sample# 13-15

LOS ANGELES SCHOOL DISTRICT
DIAGRAM OF BUILDING AREAS

SCHOOL: BASSETT STREET SCHOOL

ADDRESS: 15756 BASSETT STREET
VAN NUYS, CA 91406

DISTRICT: LOS ANGELES UNIFIED SCHOOL DISTRICT

[redacted]

LOCATION 2323
APPLICATION NO. 22/
DRAWING BAT04F1 003 DAN
BUILDING 4

PLOT PLANS AND
ALLOTMENTS UNIT
IBM TOWER - ROOM 420

Bldg. A
(003DAN)

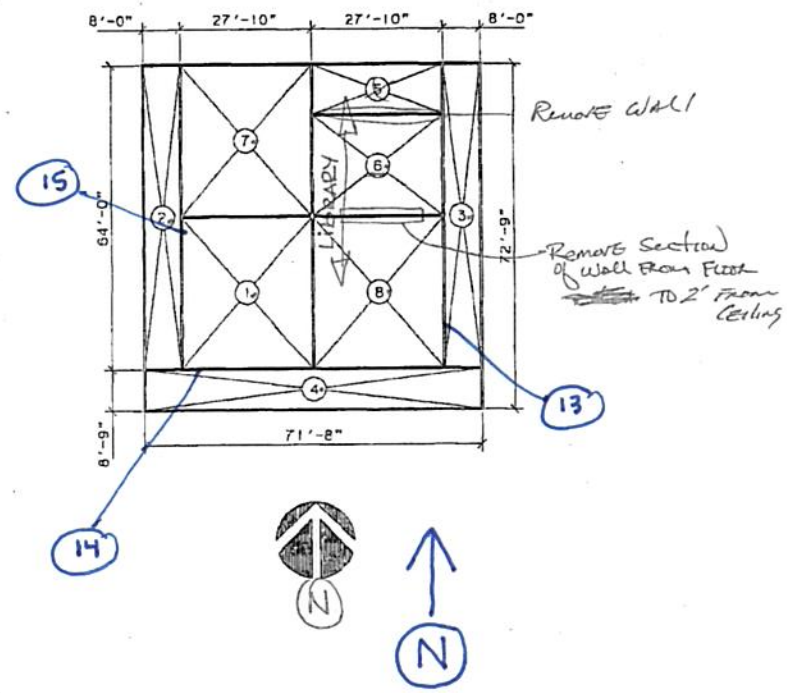

PLOT SCALE: 1"=20'-0"

AUTHORIZED AGENT
LOS ANGELES UNIFIED SCHOOL DISTRICT

DATE: 01/05/95
SHEET 9 OF 41 SHEETS

ADA Improvements
Sampled By: CNS Env. Eric Bracamontes
Sampled Date: 07-01-24
Sampled Material: Vapor Barrier paper-walls
Sample# 13-15

LOS ANGELES SCHOOL DISTRICT
DIAGRAM OF BUILDING AREAS

SCHOOL: BASSETT STREET SCHOOL

ADDRESS: 15756 BASSETT STREET
VAN NUYS, CA 91406

DISTRICT: LOS ANGELES UNIFIED SCHOOL DISTRICT

[redacted]

LOCATION 2323
APPLICATION NO. 22/
DRAWING BAT04F1 003 DAN
BUILDING 4

PLOT PLANS AND
ALLOTMENTS UNIT
IBM TOWER - ROOM 420

Bldg. A
(003DAN)

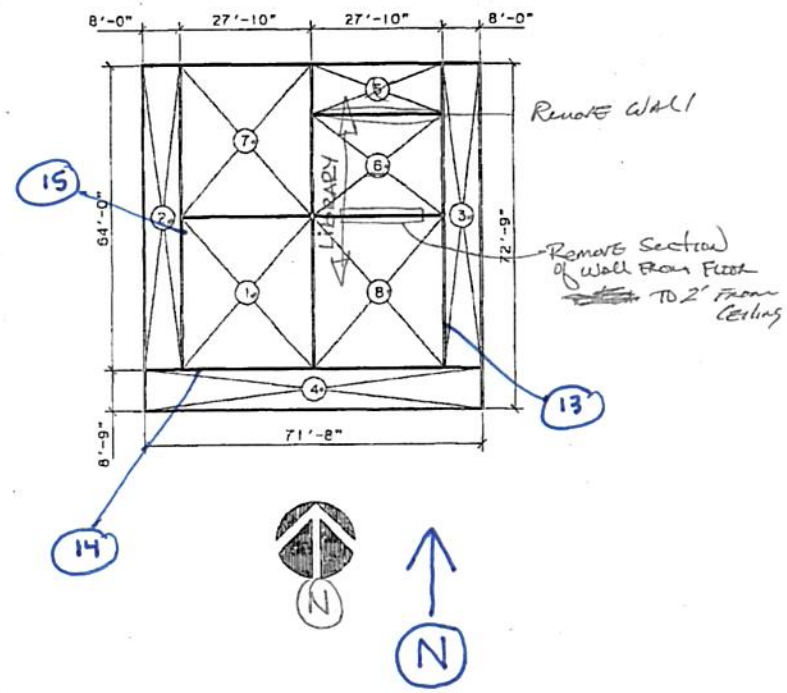

PLOT SCALE: 1"=20'-0"

AUTHORIZED AGENT
LOS ANGELES UNIFIED SCHOOL DISTRICT

DATE: 01/05/95
SHEET 9 OF 41 SHEETS

Sample Material:

- 12x12 Lt. Brown Floor Tile w/ Mastic (over concrete)
  sample #: 16-18
- 12x12 Brown Floor Tile w/ Mastic (over concrete)
  sample #: 19-21
- Vapor Barrier Paper-walls
  sample #: 22-24

Utility & Classroom Bldg B

LOS ANGELES SCHOOL DISTRICT
DIAGRAM OF BUILDING AREAS

LOCATION 2323
APPLICATION NO. 22/
DRAWING BAT07F1 (004DAN)
BUILDING 7

SCHOOL: BASSETT STREET SCHOOL

ADDRESS: 15756 BASSETT STREET
VAN NUYS, CA 91406

DISTRICT: LOS ANGELES UNIFIED SCHOOL DISTRICT

ADA Improvements Project
Sampled By: CNS Eric Bracamontes
Sample Date: 07-01-24

PLOT PLANS AND ALLOTMENTS UNIT
IBM TOWER - ROOM 420

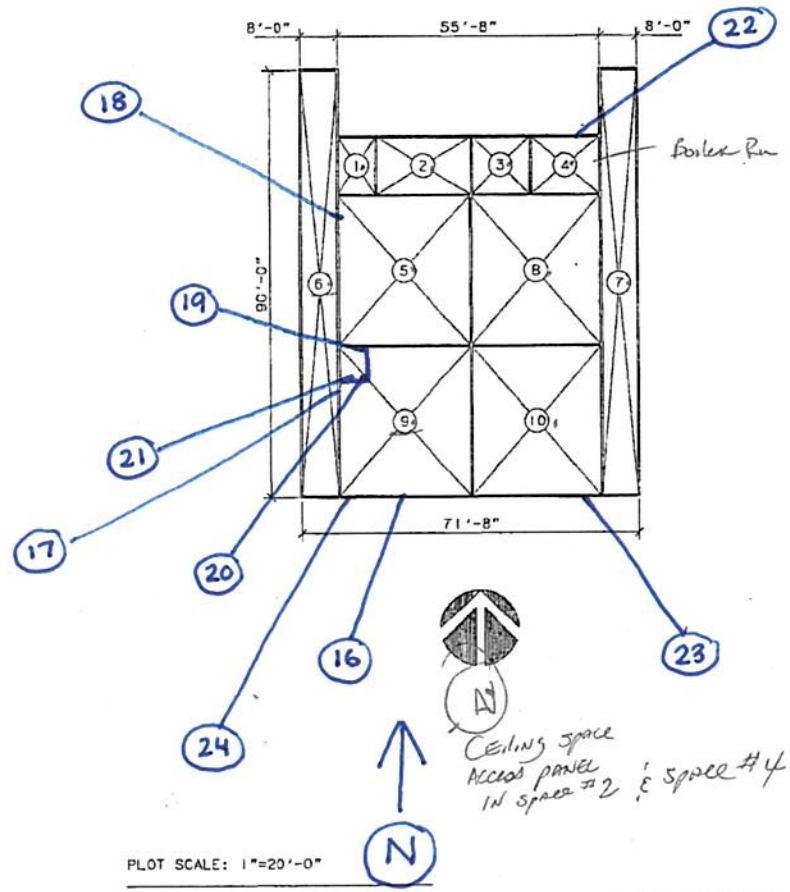

PLOT SCALE: 1"=20'-0"

AUTHORIZED AGENT
LOS ANGELES UNIFIED SCHOOL DISTRICT

DATE: 01/05/95
SHEET 15 OF 41 SHEETS

ADA Improvements Project
Sampled By: CNS Eric Bracamontes
Sample Date: 07-01-24

Sample Material:

- 1"x 1" Brown Ceramic Floor Tile w/ Grout (over concrete)
  sample #: 25-27
- Green/ Lt. Green Ceramic Floor Tile w/ Grout (over concrete)
  sample #: 28-30
- White Ceramic Wall Tile w/ Grout & Mortar
  sample #: 31-33
- Joint Compound assoc. w/ Wood Wall
  sample #: 34-36
- Vapor Barrier Paper- walls
  sample #: 37-39

Bldg "C"

LOS ANGELES SCHOOL DISTRICT
DIAGRAM OF BUILDING AREAS

LOCATION 2323
APPLICATION NO. 22/
DRAWING BATOSFI (OOSDAN)

SCHOOL: BASSETT STREET SCHOOL

ADDRESS: 15756 BASSETT STREET
VAN NUYS, CA 91406

BUILDING 6

DISTRICT: LOS ANGELES UNIFIED SCHOOL DISTRICT

PLOT PLANS AND ALLOTMENTS UNIT
IBM TOWER - ROOM 420

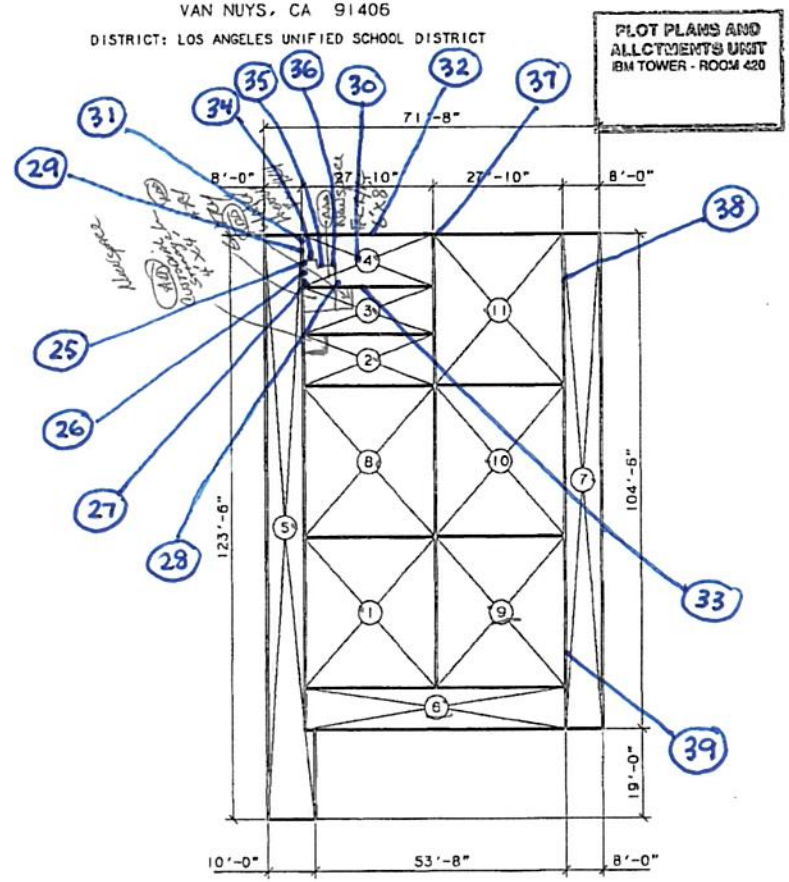

PLOT SCALE: 1"=20'-0"

N

AUTHORIZED AGENT
LOS ANGELES UNIFIED SCHOOL DISTRICT

DATE: 01/05/95
SHEET 13 OF 41 SHEETS

ADA Improvements Project
Sampled By: CNS Eric Bracamontes
Sample Date: 07-01-24

Sample Material:

- 1"x1" Brown Ceramic Floor Tile w/ Grout (over concrete)
  Sample #: 25-27
- Green/Lt. Green Ceramic Floor Tile w/ Grout (over concrete)
  Sample #: 28-30
- White Ceramic Wall Tile w/ Grout & Mortar
  Sample #: 31-33
- Joint Compound assoc. w/ Wood Wall
  Sample #: 34-36
- Vapor Barrier Paper-walls
  Sample #: 37-39

Bldg "C"

LOS ANGELES SCHOOL DISTRICT
DIAGRAM OF BUILDING AREAS

LOCATION 2323
APPLICATION NO. 22/
DRAWING BATOSFI (005DAN)

SCHOOL: BASSETT STREET SCHOOL
ADDRESS: 15756 BASSETT STREET
VAN NUYS, CA 91406
DISTRICT: LOS ANGELES UNIFIED SCHOOL DISTRICT

BUILDING 6

PLOT PLANS AND ALLOTMENTS UNIT
IBM TOWER - ROOM 420

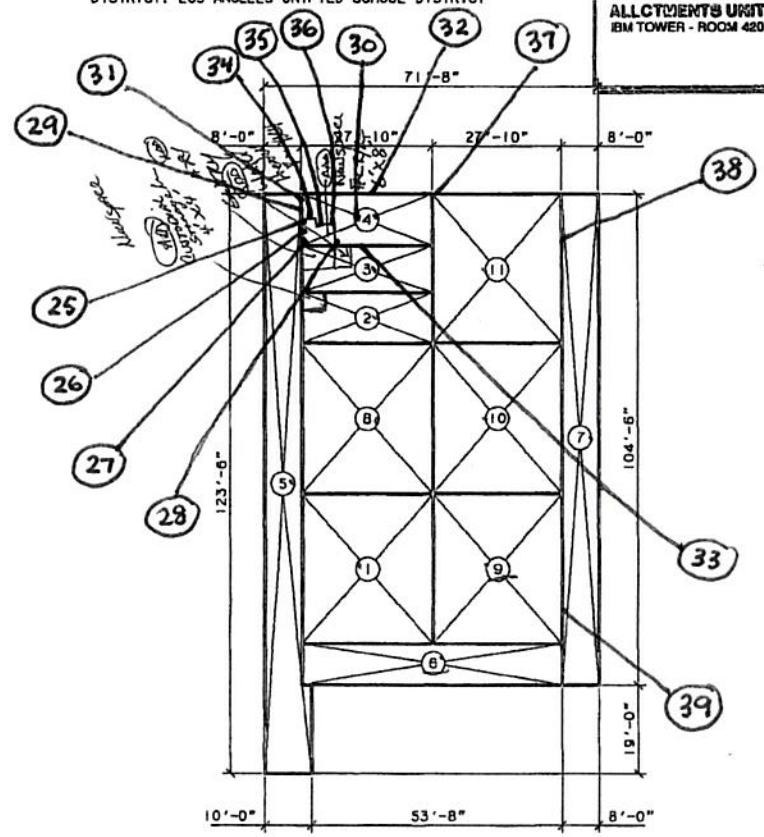

PLOT SCALE: 1"=20'-0"

N

AUTHORIZED AGENT
LOS ANGELES UNIFIED SCHOOL DISTRICT

DATE: 01/05/95
SHEET 13 OF 41 SHEETS

Sample Material:

Bldg D

LOS ANGELES SCHOOL DISTRICT
DIAGRAM OF BUILDING AREAS

LOCATION 2323

APPLICATION NO. 221
DRAWING BATOSFI (006DAN)
BUILDING 5

SCHOOL: BASSETT STREET SCHOOL

ADDRESS: 15756 BASSETT STREET
VAN NUYS, CA 91406

DISTRICT: LOS ANGELES UNIFIED SCHOOL DISTRICT

ADA Improvements Project
Sampled By: CNS Eric Bracamontes
Sample Date: 07-11-2024

PLOT PLANS AND ALLOTMENTS UNIT
IBM TOWER - ROOM 420

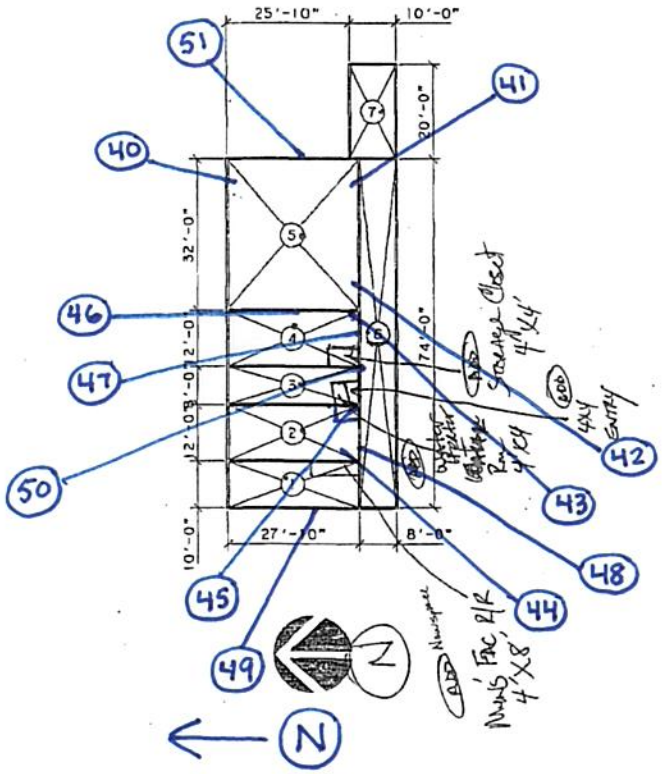

PLOT SCALE: 1"=20'-0"

AUTHORIZED AGENT
LOS ANGELES UNIFIED SCHOOL DISTRICT

DATE: 01/05/95
SHEET 11 OF 41 SHEETS

Sample Material:

- Green / Lt. Green Ceramic Floor Tile w/ Grout (over concrete)
  Sample #: 52-54
- 12x12 Lt. Blue Floor Tile w/ Mastic (over concrete)
  Sample #: 55-57
- Vapor Barrier Paper - walls
  Sample #: 58-60

Kindergarten Bldg

LOS ANGELES SCHOOL DISTRICT
DIAGRAM OF BUILDING AREAS

LOCATION 2323
APPLICATION NO. 22/
DRAWING BAT02F1 (007DAN)
BUILDING 2

SCHOOL: BASSETT STREET SCHOOL
ADDRESS: 15756 BASSETT STREET
VAN NUYS, CA 91406
DISTRICT: LOS ANGELES UNIFIED SCHOOL DISTRICT

PLOT PLANS AND ALLOTMENTS UNIT
IBM TOWER - ROOM 420

ADA Improvements Project
Sampled By: CNS Eric Bracamontes
Sample Date: 07-11-2024

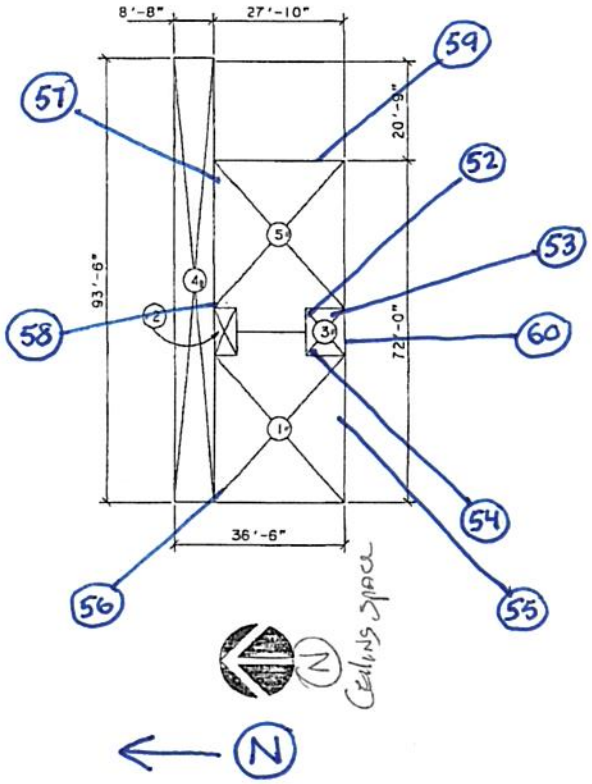

PLOT SCALE: 1"=20'-0"

AUTHORIZED AGENT
LOS ANGELES UNIFIED SCHOOL DISTRICT

DATE: 01/05/95
SHEET 5 OF 41 SHEETS

Sample Material:

- Vapor Barrier Paper-walls
  Sample #: 61-63

Admin Bldg

LOS ANGELES SCHOOL DISTRICT
DIAGRAM OF BUILDING AREAS

LOCATION 2323

APPLICATION NO. 22/
DRAWING BATOIFI (001DAN)
BUILDING 1

SCHOOL: BASSETT STREET SCHOOL

ADDRESS: 15756 BASSETT STREET
VAN NUYS, CA 91406

DISTRICT: LOS ANGELES UNIFIED SCHOOL DISTRICT

PLOT PLANS AND ALLOTMENTS UNIT
IBM TOWER - ROOM 420

ADA Improvements Project
Sampled By: Eric Bracamontes
Sample Date: 07-11-2024

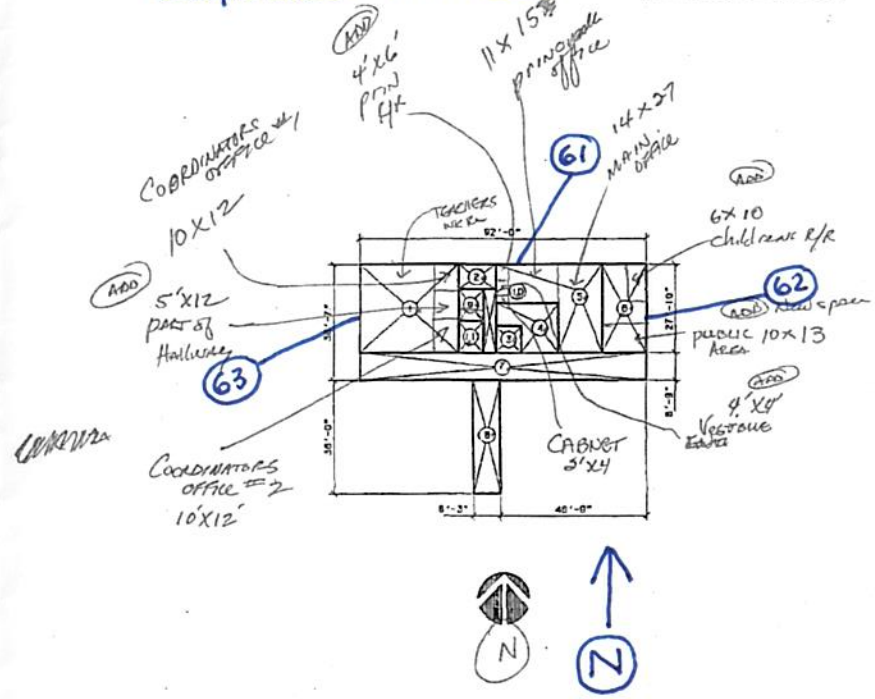

PLOT SCALE: 1"=30'-0"

AUTHORIZED AGENT
LOS ANGELES UNIFIED SCHOOL DISTRICT

DATE: 01/05/95
SHEET 3 OF 41 SHEETS

Bassett Elementary School (2323)
1010 Abbot Kinney Blvd., Venice, CA 90291
ADA Improvements Project
Sampled By: CNS Eric Bracamontes
Sample Date: 07-11-2024

Sample Material:

- 12x12 White Floor Tile w/ Adhesive (CORE)
  sample #: 64-66
- 4" Brown Cove Base w/ Adhesive
  sample #: 67-69
- Fiberboard Wall Panel
  sample #: 70-72

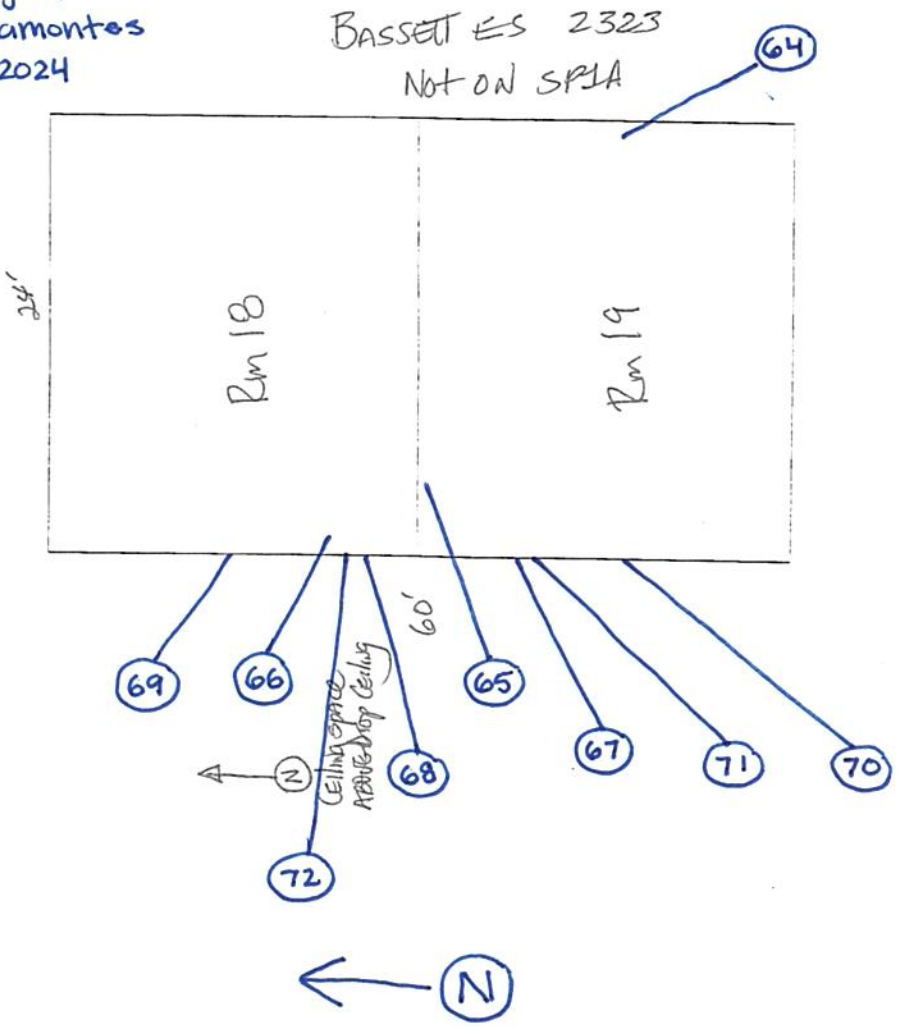

2/3 Unit Relocatable
(X3495Y)

LOS ANGELES UNIFIED SCHOOL DISTRICT
FACILITIES SERVICES DIVISION
CHAIN-OF-CUSTODY FOR BULK ANALYSIS

54172

SITE NAME: Bassett Elementary School CODE: 2323 PROJECT DESC ADA Improvements COLIN #: 10373370

SAMPLED BY: Eric Bracamontes DATE SAMPLED: 07-01-2024 DEPT. / CONSULTANT: CNS Environmental, Inc. TEL: (714) 525-5115

Fill in all information legibly and precisely. Original must be submitted with the samples. Make a copy before submitting samples. Results and a copy of the Chain of Custody (COC) with sample numbers will be submitted to FETU when analysis is completed. ***USE BLACK/BLUE INK ONLY. DO NOT USE WHITE OUT! ALL RUSH ANALYSIS AND POINT COUNT REQUESTS MUST BE APPROVED BY FETU SUPERVISORS.***

LAB NUMBER	SAMPLE NUMBER	BUILDING NUMBER	BUILDING NAME	ROOM NUMBER AND/OR NAME	LOCATION IN ROOM	MATERIAL TYPE (DESCRIBE)	FRIABLE (YES or NO)
2407-0614	01	002DAN	Multipurpose Bldg	Auditorium Stage Area	West	Varnish Hardwood Floor (CORE)	No
2407-0615	02	↓	↓	↓	N/E	↓	↓
2407-0616	03	↓	↓	↓	S/E	↓	↓
2407-0617	04	↓	↓	Auditorium	N/E	12x12 Dk. Blue, 12x12 Lt. Blue Floor Tile - Mixed w/ Adhesive (over concrete)	No
2407-0618	05	↓	↓	↓	East	↓	↓
2407-0619	06	↓	↓	↓	S/W	↓	↓
2407-0620	07	↓	↓	Auditorium N/E Restroom	(sink area) - North	Blue / Lt. Blue Ceramic Floor Tile w/ Grout (over concrete)	No
2407-0621	08	↓	↓	↓	(toilet area) - South	↓	↓
2407-0622	09	↓	↓	Auditorium S/E Restroom	(sink area) - West	↓	↓
2407-0623	10	↓	↓	Exterior Wall: behind stucco	N/E	Vapor Barrier Paper - walls	No
2407-0624	11	↓	↓	↓	South	↓	↓
2407-0625	12	↓	↓	↓	S/W	↓	↓

	NAME (PRINT & SIGN)	DEPT./AREA/CONSULTANT	# OF SAMPLES	DATE	TIME
Relinquished By:	E. Bracamontes [signature]	CNS Env.	12	07-08-2024	12:00p
Received By:	ARTURO COSOS [signature]	FSD LAB	12	7/8/24	12:00 Pm
Relinquished By:					
Received By:					

Maximo Work Order Number: 38050584 Project Type: ☐ Maintenance (MA) ☐ Deferred Maintenance ☐ Bond (specify: K,R,Y,Q) ☐ Other:

FETU USE ONLY

FETU REVIEWED BY: [signature] RUSH? ☐ Yes ☐ No APPROVAL:

FETU REVIEW DATE: 7-8-24 POINT COUNT? ☐ Yes ☐ No PT. CT. RUSH? ☐ Yes ☐ No APPROVAL:

Los Angeles Unified School District
Facilities Services Division Laboratory
1449 S. San Pedro St.
Los Angeles, CA 90015
(213)745-1138

Asbestos Bulk Sample Analysis Laboratory Report

Laboratory Report

BASSETT ST ELEM

2323

NVLAP (TESTING) LAB# 101505-0
Method EPA/600/R-93/116(MOD) July 1993
Date Received: 07/08/2024

LAUSD Lab#	MIC	Date Analyzed	BUILDING/AREA SAMPLED	MATERIAL DESCRIPTION	CHR %	AM %	CROC %	TREM %	ACT %	ANTH %	TOTAL %	MATERIAL BACKGROUND
2024070614-A	AC	07/10/2024	002DAN : MULTIPURPOSE BLDG. AUDITORIUM STAGE AREA W	HOMOGENEOUS; NON-FRIABLE; CLEAR; COATING; COATED MATERIAL	0	0	0	0	0	0	0	BINDER
2024070614-B	AC	07/10/2024	002DAN : MULTIPURPOSE BLDG. AUDITORIUM STAGE AREA W	HOMOGENEOUS; NON-FRIABLE; LITE BROWN; FLOORING; FIBROUS	0	0	0	0	0	0	0	100% CELLULOSE
2024070614-C	AC	07/10/2024	002DAN : MULTIPURPOSE BLDG. AUDITORIUM STAGE AREA W	HOMOGENEOUS; NON-FRIABLE; OFF WHITE; COMPOUND MATERIAL; CHALKY	0	0	0	0	0	0	0	MINERAL FILLER
2024070614-D	AC	07/10/2024	002DAN : MULTIPURPOSE BLDG. AUDITORIUM STAGE AREA W	HOMOGENEOUS; NON-FRIABLE; LITE BROWN; WOOD; FIBROUS	0	0	0	0	0	0	0	100% CELLULOSE
2024070615-A	AC	07/10/2024	002DAN : MULTIPURPOSE BLDG. AUDITORIUM STAGE AREA NE	HOMOGENEOUS; NON-FRIABLE; CLEAR; COATING; COATED MATERIAL	0	0	0	0	0	0	0	BINDER
2024070615-B	AC	07/10/2024	002DAN : MULTIPURPOSE BLDG. AUDITORIUM STAGE AREA NE	HOMOGENEOUS; NON-FRIABLE; LITE BROWN; FLOORING; FIBROUS	0	0	0	0	0	0	0	100% CELLULOSE
2024070615-C	AC	07/10/2024	002DAN : MULTIPURPOSE BLDG. AUDITORIUM STAGE AREA NE	HOMOGENEOUS; NON-FRIABLE; OFF WHITE; COMPOUND MATERIAL; CHALKY	0	0	0	0	0	0	0	MINERAL FILLER

Lab Supervisor Signature and Date _____ 7 / 11 / 24

Signature of Analyst _____

Note: 0%: No Asbestos Detected; <1%: Asbestos Detected Above 0% and Below or Equal to 1%
NA: Not Applicable. ""Quantification done by optical estimate"" 1 - 5 % considered non-quantifiable.
This report relates to only the material tested. An asterisk '*' indicates preliminary results.
The laboratory is not responsible for samples and data collected by personnel who are not part of the laboratory.

This report is not used by LAUSD to claim product endorsement by NVLAP
or any agency of the U.S. Government.
This report may not be reproduced except in its entirety.

Los Angeles Unified School District
Facilities Services Division Laboratory
1449 S. San Pedro St.
Los Angeles, CA 90015
(213)745-1138

Asbestos Bulk Sample Analysis Laboratory Report

Laboratory Report

BASSETT ST ELEM

2323

NVLAP (TESTING) LAB# 101505-0
Method EPA/600/R-93/116(MOD) July 1993
Date Received: 07/08/2024

LAUSD Lab#	MIC	Date Analyzed	BUILDING/AREA SAMPLED	MATERIAL DESCRIPTION	CHR %	AM %	CROC %	TREM %	ACT %	ANTH %	TOTAL %	MATERIAL BACKGROUND
2024070615-D	AC	07/10/2024	002DAN : MULTIPURPOSE BLDG. AUDITORIUM STAGE AREA NE	HOMOGENEOUS; NON-FRIABLE; LITE BROWN; WOOD; FIBROUS	0	0	0	0	0	0	0	100% CELLULOSE
2024070616-A	AC	07/10/2024	002DAN : MULTIPURPOSE BLDG. AUDITORIUM STAGE AREA SE	HOMOGENEOUS; NON-FRIABLE; CLEAR; COATING; COATED MATERIAL	0	0	0	0	0	0	0	BINDER
2024070616-B	AC	07/10/2024	002DAN : MULTIPURPOSE BLDG. AUDITORIUM STAGE AREA SE	HOMOGENEOUS; NON-FRIABLE; LITE BROWN; FLOORING; FIBROUS	0	0	0	0	0	0	0	100% CELLULOSE
2024070616-C	AC	07/10/2024	002DAN : MULTIPURPOSE BLDG. AUDITORIUM STAGE AREA SE	HOMOGENEOUS; NON-FRIABLE; OFF WHITE; COMPOUND MATERIAL; CHALKY	0	0	0	0	0	0	0	MINERAL FILLER
2024070616-D	AC	07/10/2024	002DAN : MULTIPURPOSE BLDG. AUDITORIUM STAGE AREA SE	HOMOGENEOUS; NON-FRIABLE; LITE BROWN; WOOD; FIBROUS	0	0	0	0	0	0	0	100% CELLULOSE
2024070617-A	AC	07/10/2024	002DAN : MULTIPURPOSE BLDG. AUDITORIUM NE	HOMOGENEOUS; NON-FRIABLE; BLUE; FLOOR TILE; VINYL	0	0	0	0	0	0	0	BINDER, CARBONATES
2024070617-B	AC	07/10/2024	002DAN : MULTIPURPOSE BLDG. AUDITORIUM NE	HOMOGENEOUS; NON-FRIABLE; YELLOW; ADHESIVE; RESIN-LIKE	0	0	0	0	0	0	0	ADHESIVE

Lab Supervisor Signature and Date _____ 7 / 11 / 24

Signature of Analyst _____

Note: 0%: No Asbestos Detected; <1%: Asbestos Detected Above 0% and Below or Equal to 1%
NA: Not Applicable. ""Quantification done by optical estimate"" 1 - 5 % considered non-quantifiable.
This report relates to only the material tested. An asterisk '*' indicates preliminary results.
The laboratory is not responsible for samples and data collected by personnel who are not part of the laboratory.

This report is not used by LAUSD to claim product endorsement by NVLAP
or any agency of the U.S. Government.
This report may not be reproduced except in its entirety.

Los Angeles Unified School District
Facilities Services Division Laboratory
1449 S. San Pedro St.
Los Angeles, CA 90015
(213)745-1138

Asbestos Bulk Sample Analysis Laboratory Report

Laboratory Report

BASSETT ST ELEM

2323

NVLAP (TESTING) LAB# 101505-0
Method EPA/600/R-93/116(MOD) July 1993
Date Received: 07/08/2024

LAUSD Lab#	MIC	Date Analyzed	BUILDING/AREA SAMPLED	MATERIAL DESCRIPTION	CHR %	AM %	CROC %	TREM %	ACT %	ANTH %	TOTAL %	MATERIAL BACKGROUND
2024070617-C	AC	07/10/2024	002DAN : MULTIPURPOSE BLDG. AUDITORIUM NE	HOMOGENEOUS; NON-FRIABLE; GRAY; LEVELING MATERIAL; CHALKY	0	0	0	0	0	0	0	MINERAL FILLER
2024070617-D	AC	07/10/2024	002DAN : MULTIPURPOSE BLDG. AUDITORIUM NE	HOMOGENEOUS; NON-FRIABLE; WHITE; ENCAPSULATION; COATED MATERIAL	0	0	0	0	0	0	0	BINDER
2024070617-E	AC	07/10/2024	002DAN : MULTIPURPOSE BLDG. AUDITORIUM NE	HOMOGENEOUS; NON-FRIABLE; BLACK; MASTIC; TAR	3	0	0	0	0	0	3	TAR
					COMMENT(S): SMALL AMOUNT OF MATERIAL							
2024070617-F	AC	07/10/2024	002DAN : MULTIPURPOSE BLDG. AUDITORIUM NE	HOMOGENEOUS; NON-FRIABLE; LT. BLUE; FLOOR TILE; VINYL	0	0	0	0	0	0	0	BINDER, CARBONATES
2024070617-G	AC	07/10/2024	002DAN : MULTIPURPOSE BLDG. AUDITORIUM NE	HOMOGENEOUS; NON-FRIABLE; YELLOW; ADHESIVE; RESIN-LIKE	0	0	0	0	0	0	0	ADHESIVE
2024070617-H	AC	07/10/2024	002DAN : MULTIPURPOSE BLDG. AUDITORIUM NE	HOMOGENEOUS; NON-FRIABLE; GRAY; LEVELING MATERIAL; CHALKY	0	0	0	0	0	0	0	MINERAL FILLER
2024070617-I	AC	07/10/2024	002DAN : MULTIPURPOSE BLDG. AUDITORIUM NE	HOMOGENEOUS; NON-FRIABLE; WHITE; ENCAPSULATION; COATED MATERIAL	0	0	0	0	0	0	0	BINDER

Lab Supervisor Signature and Date _____ 7 / 11 / 24

Signature of Analyst _____

Note: 0%: No Asbestos Detected; <1%: Asbestos Detected Above 0% and Below or Equal to 1%
NA: Not Applicable. ""Quantification done by optical estimate"" 1 - 5 % considered non-quantifiable.
This report relates to only the material tested. An asterisk '*' indicates preliminary results.
The laboratory is not responsible for samples and data collected by personnel who are not part of the laboratory.

This report is not used by LAUSD to claim product endorsement by NVLAP
or any agency of the U.S. Government.
This report may not be reproduced except in its entirety.

Los Angeles Unified School District
Facilities Services Division Laboratory
1449 S. San Pedro St.
Los Angeles, CA 90015
(213)745-1138

Asbestos Bulk Sample Analysis Laboratory Report

Laboratory Report

BASSETT ST ELEM

2323

NVLAP (TESTING) LAB# 101505-0
Method EPA/600/R-93/116(MOD) July 1993
Date Received: 07/08/2024

LAUSD Lab#	MIC	Date Analyzed	BUILDING/AREA SAMPLED	MATERIAL DESCRIPTION	CHR %	AM %	CROC %	TREM %	ACT %	ANTH %	TOTAL %	MATERIAL BACKGROUND
2024070617-J	AC	07/10/2024	002DAN : MULTIPURPOSE BLDG. AUDITORIUM NE	HOMOGENEOUS; NON-FRIABLE; BLACK; MASTIC; TAR	3	0	0	0	0	0	3	TAR
				COMMENT(S): SMALL AMOUNT OF MATERIAL								
2024070618-A	AC	07/10/2024	002DAN : MULTIPURPOSE BLDG. AUDITORIUM E	HOMOGENEOUS; NON-FRIABLE; BLUE; FLOOR TILE; VINYL	0	0	0	0	0	0	0	BINDER, CARBONATES
2024070618-B	AC	07/10/2024	002DAN : MULTIPURPOSE BLDG. AUDITORIUM E	HOMOGENEOUS; NON-FRIABLE; YELLOW; ADHESIVE; RESIN-LIKE	0	0	0	0	0	0	0	ADHESIVE
2024070618-C	AC	07/10/2024	002DAN : MULTIPURPOSE BLDG. AUDITORIUM E	HOMOGENEOUS; NON-FRIABLE; GRAY; LEVELING MATERIAL; CHALKY	0	0	0	0	0	0	0	MINERAL FILLER
2024070618-D	AC	07/10/2024	002DAN : MULTIPURPOSE BLDG. AUDITORIUM E	HOMOGENEOUS; NON-FRIABLE; WHITE; ENCAPSULATION; COATED MATERIAL	0	0	0	0	0	0	0	BINDER
				COMMENT(S): SMALL AMOUNT OF MATERIAL								
2024070618-E	AC	07/10/2024	002DAN : MULTIPURPOSE BLDG. AUDITORIUM E	HOMOGENEOUS; NON-FRIABLE; BLACK; MASTIC; TAR	3	0	0	0	0	0	3	TAR
				COMMENT(S): SMALL AMOUNT OF MATERIAL								
2024070618-F	AC	07/10/2024	002DAN : MULTIPURPOSE BLDG. AUDITORIUM E	HOMOGENEOUS; NON-FRIABLE; LT. BLUE; FLOOR TILE; VINYL	0	0	0	0	0	0	0	BINDER, CARBONATES

Lab Supervisor Signature and Date _____ 7 / 11 / 24

Signature of Analyst _____

Note: 0%: No Asbestos Detected; <1%: Asbestos Detected Above 0% and Below or Equal to 1%
NA: Not Applicable. ""Quantification done by optical estimate"" 1 - 5 % considered non-quantifiable.
This report relates to only the material tested. An asterisk '*' indicates preliminary results.
The laboratory is not responsible for samples and data collected by personnel who are not part of the laboratory.

This report is not used by LAUSD to claim product endorsement by NVLAP
or any agency of the U.S. Government.
This report may not be reproduced except in its entirety.

Los Angeles Unified School District
Facilities Services Division Laboratory
1449 S. San Pedro St.
Los Angeles, CA 90015
(213)745-1138

Asbestos Bulk Sample Analysis Laboratory Report

Laboratory Report

BASSETT ST ELEM

2323

NVLAP (TESTING) LAB# 101505-0
Method EPA/600/R-93/116(MOD) July 1993
Date Received: 07/08/2024

LAUSD Lab#	MIC	Date Analyzed	BUILDING/AREA SAMPLED	MATERIAL DESCRIPTION	CHR %	AM %	CROC %	TREM %	ACT %	ANTH %	TOTAL %	MATERIAL BACKGROUND
2024070618-G	AC	07/10/2024	002DAN : MULTIPURPOSE BLDG. AUDITORIUM E	HOMOGENEOUS; NON-FRIABLE; YELLOW; ADHESIVE; RESIN-LIKE	0	0	0	0	0	0	0	ADHESIVE
2024070618-H	AC	07/10/2024	002DAN : MULTIPURPOSE BLDG. AUDITORIUM E	HOMOGENEOUS; NON-FRIABLE; GRAY; LEVELING MATERIAL; CHALKY	0	0	0	0	0	0	0	MINERAL FILLER
2024070618-I	AC	07/10/2024	002DAN : MULTIPURPOSE BLDG. AUDITORIUM E	HOMOGENEOUS; NON-FRIABLE; WHITE; ENCAPSULATION; COATED MATERIAL	0	0	0	0	0	0	0	BINDER
					COMMENT(S): SMALL AMOUNT OF MATERIAL							
2024070618-J	AC	07/10/2024	002DAN : MULTIPURPOSE BLDG. AUDITORIUM E	HOMOGENEOUS; NON-FRIABLE; BLACK; MASTIC; TAR	3	0	0	0	0	0	3	TAR
					COMMENT(S): SMALL AMOUNT OF MATERIAL							
2024070619-A	AC	07/10/2024	002DAN : MULTIPURPOSE BLDG. AUDITORIUM SW	HOMOGENEOUS; NON-FRIABLE; BLUE; FLOOR TILE; VINYL	0	0	0	0	0	0	0	BINDER, CARBONATES
2024070619-B	AC	07/10/2024	002DAN : MULTIPURPOSE BLDG. AUDITORIUM SW	HOMOGENEOUS; NON-FRIABLE; YELLOW; ADHESIVE; RESIN-LIKE	0	0	0	0	0	0	0	ADHESIVE
2024070619-C	AC	07/10/2024	002DAN : MULTIPURPOSE BLDG. AUDITORIUM SW	HOMOGENEOUS; NON-FRIABLE; GRAY; LEVELING MATERIAL; CHALKY	0	0	0	0	0	0	0	MINERAL FILLER

Lab Supervisor Signature and Date _____ 7 / 11 / 24

Signature of Analyst _____

Note: 0%: No Asbestos Detected; <1%: Asbestos Detected Above 0% and Below or Equal to 1%
NA: Not Applicable. ""Quantification done by optical estimate"" 1 - 5 % considered non-quantifiable.
This report relates to only the material tested. An asterisk '*' indicates preliminary results.
The laboratory is not responsible for samples and data collected by personnel who are not part of the laboratory.

This report is not used by LAUSD to claim product endorsement by NVLAP or any agency of the U.S. Government.
This report may not be reproduced except in its entirety.

Los Angeles Unified School District
Facilities Services Division Laboratory
1449 S. San Pedro St.
Los Angeles, CA 90015
(213)745-1138

Asbestos Bulk Sample Analysis Laboratory Report

Laboratory Report

BASSETT ST ELEM

2323

NVLAP (TESTING) LAB# 101505-0
Method EPA/600/R-93/116(MOD) July 1993
Date Received: 07/08/2024

LAUSD Lab#	MIC	Date Analyzed	BUILDING/AREA SAMPLED	MATERIAL DESCRIPTION	CHR %	AM %	CROC %	TREM %	ACT %	ANTH %	TOTAL %	MATERIAL BACKGROUND
2024070619-D	AC	07/10/2024	002DAN : MULTIPURPOSE BLDG. AUDITORIUM SW	HOMOGENEOUS; NON-FRIABLE; WHITE; ENCAPSULATION; COATED MATERIAL	0	0	0	0	0	0	0	BINDER
2024070619-E	AC	07/10/2024	002DAN : MULTIPURPOSE BLDG. AUDITORIUM SW	HOMOGENEOUS; NON-FRIABLE; BLACK; MASTIC; TAR	5	0	0	0	0	0	5	TAR
2024070619-F	AC	07/10/2024	002DAN : MULTIPURPOSE BLDG. AUDITORIUM SW	HOMOGENEOUS; NON-FRIABLE; LT. BLUE; FLOOR TILE; VINYL	0	0	0	0	0	0	0	BINDER, CARBONATES
2024070619-G	AC	07/10/2024	002DAN : MULTIPURPOSE BLDG. AUDITORIUM SW	HOMOGENEOUS; NON-FRIABLE; YELLOW; ADHESIVE; RESIN-LIKE	0	0	0	0	0	0	0	ADHESIVE
2024070619-H	AC	07/10/2024	002DAN : MULTIPURPOSE BLDG. AUDITORIUM SW	HOMOGENEOUS; NON-FRIABLE; GRAY; LEVELING MATERIAL; CHALKY	0	0	0	0	0	0	0	MINERAL FILLER
2024070619-I	AC	07/10/2024	002DAN : MULTIPURPOSE BLDG. AUDITORIUM SW	HOMOGENEOUS; NON-FRIABLE; WHITE; ENCAPSULATION; COATED MATERIAL	0	0	0	0	0	0	0	BINDER
2024070619-J	AC	07/10/2024	002DAN : MULTIPURPOSE BLDG. AUDITORIUM SW	HOMOGENEOUS; NON-FRIABLE; BLACK; MASTIC; TAR	5	0	0	0	0	0	5	TAR

Lab Supervisor Signature and Date _____ 7 / 11 / 24

Signature of Analyst _____

Note: 0%: No Asbestos Detected; <1%: Asbestos Detected Above 0% and Below or Equal to 1%
NA: Not Applicable "*Quantification done by optical estimate"* 1 - 5 % considered non-quantifiable.
This report relates to only the material tested. An asterisk '*' indicates preliminary results.
The laboratory is not responsible for samples and data collected by personnel who are not part of the laboratory.

This report is not used by LAUSD to claim product endorsement by NVLAP or any agency of the U.S. Government.
This report may not be reproduced except in its entirety.

Los Angeles Unified School District
Facilities Services Division Laboratory
1449 S. San Pedro St.
Los Angeles, CA 90015
(213)745-1138

Asbestos Bulk Sample Analysis Laboratory Report

Laboratory Report

BASSETT ST ELEM

2323

NVLAP (TESTING) LAB# 101505-0
Method EPA/600/R-93/116(MOD) July 1993
Date Received: 07/08/2024

LAUSD Lab#	MIC	Date Analyzed	BUILDING/AREA SAMPLED	MATERIAL DESCRIPTION	CHR %	AM %	CROC %	TREM %	ACT %	ANTH %	TOTAL %	MATERIAL BACKGROUND
2024070620-A	AC	07/10/2024	002DAN : MULTIPURPOSE BLDG. AUDITORIUM NE RR (SINK AREA) N	HOMOGENEOUS; NON-FRIABLE; BLUE/ LT. BLUE; CERAMIC TILES; CERAMIC	0	0	0	0	0	0	0	MINERAL FILLER
2024070620-B	AC	07/10/2024	002DAN : MULTIPURPOSE BLDG. AUDITORIUM NE RR (SINK AREA) N	HOMOGENEOUS; NON-FRIABLE; GRAY/ TAN; GROUT; CEMENTITIOUS	0	0	0	0	0	0	0	MINERAL FILLER
2024070621-A	AC	07/10/2024	002DAN : MULTIPURPOSE BLDG. AUDITORIUM NE RR (TOILET AREA) S	HOMOGENEOUS; NON-FRIABLE; BLUE/ LT. BLUE; CERAMIC TILES; CERAMIC	0	0	0	0	0	0	0	MINERAL FILLER
2024070621-B	AC	07/10/2024	002DAN : MULTIPURPOSE BLDG. AUDITORIUM NE RR (TOILET AREA) S	HOMOGENEOUS; NON-FRIABLE; GRAY/ TAN; GROUT; CEMENTITIOUS	0	0	0	0	0	0	0	MINERAL FILLER
2024070622-A	AC	07/10/2024	002DAN : MULTIPURPOSE BLDG. AUDITORIUM SE RR (SINK AREA) W	HOMOGENEOUS; NON-FRIABLE; BLUE/ LT. BLUE; CERAMIC TILES; CERAMIC	0	0	0	0	0	0	0	MINERAL FILLER
2024070622-B	AC	07/10/2024	002DAN : MULTIPURPOSE BLDG. AUDITORIUM SE RR (SINK AREA) W	HOMOGENEOUS; NON-FRIABLE; GRAY/ TAN; GROUT; CEMENTITIOUS	0	0	0	0	0	0	0	MINERAL FILLER
2024070623	AC	07/10/2024	002DAN : MULTIPURPOSE BLDG. EXTERIOR WALL: BEHIND STUCCO NE	HOMOGENEOUS; NON-FRIABLE; BLACK; VAPOR BARRIER; FELT/ TAR	0	0	0	0	0	0	0	80% CELLULOSE TAR

Lab Supervisor Signature and Date _____ 7 / 11 / 24

Signature of Analyst _____

Note: 0%: No Asbestos Detected; <1%: Asbestos Detected Above 0% and Below or Equal to 1%
NA: Not Applicable. ""Quantification done by optical estimate"" 1 - 5 % considered non-quantifiable.
This report relates to only the material tested. An asterisk '*' indicates preliminary results.
The laboratory is not responsible for samples and data collected by personnel who are not part of the laboratory.

This report is not used by LAUSD to claim product endorsement by NVLAP or any agency of the U.S. Government.
This report may not be reproduced except in its entirety.

Los Angeles Unified School District
Facilities Services Division Laboratory
1449 S. San Pedro St.
Los Angeles, CA 90015
(213)745-1138

Asbestos Bulk Sample Analysis Laboratory Report

Laboratory Report

BASSETT ST ELEM

2323

NVLAP (TESTING) LAB# 101505-0
Method EPA/600/R-93/116(MOD) July 1993
Date Received: 07/08/2024

LAUSD Lab#	MIC	Date Analyzed	BUILDING/AREA SAMPLED	MATERIAL DESCRIPTION	CHR %	AM %	CROC %	TREM %	ACT %	ANTH %	TOTAL %	MATERIAL BACKGROUND
2024070624	AC	07/10/2024	002DAN : MULTIPURPOSE BLDG. EXTERIOR WALL: BEHIND STUCCO S	HOMOGENEOUS; NON-FRIABLE; BLACK; VAPOR BARRIER; FELT/ TAR	0	0	0	0	0	0	0	80% CELLULOSE TAR
2024070625	AC	07/10/2024	002DAN : MULTIPURPOSE BLDG. EXTERIOR WALL: BEHIND STUCCO SW	HOMOGENEOUS; NON-FRIABLE; BLACK; VAPOR BARRIER; FELT/ TAR	0	0	0	0	0	0	0	80% CELLULOSE TAR

Lab Supervisor Signature and Date _____ 7 / 11 / 24

Signature of Analyst _____

Note: 0%: No Asbestos Detected; <1%: Asbestos Detected Above 0% and Below or Equal to 1%
NA: Not Applicable. ""Quantification done by optical estimate"" 1 - 5 % considered non-quantifiable.
This report relates to only the material tested. An asterisk '*' indicates preliminary results.
The laboratory is not responsible for samples and data collected by personnel who are not part of the laboratory.

This report is not used by LAUSD to claim product endorsement by NVLAP
or any agency of the U.S. Government.
This report may not be reproduced except in its entirety.

LOS ANGELES UNIFIED SCHOOL DISTRICT
FACILITIES SERVICES DIVISION
CHAIN-OF-CUSTODY FOR BULK ANALYSIS

54173

SITE NAME: Bassett Elementary School CODE: 2323 PROJECT DESC ADA Improvements COLIN #: 10373370

SAMPLED BY: Eric Bracamontes DATE SAMPLED: 07-01-2024 DEPT. / CONSULTANT: CNS Environmental, Inc. TEL: (714) 525-5115

Fill in all information legibly and precisely. Original must be submitted with the samples. Make a copy before submitting samples. Results and a copy of the Chain of Custody (COC) with sample numbers will be submitted to FETU when analysis is completed. ***USE BLACK/BLUE INK ONLY. DO NOT USE WHITE OUT! ALL RUSH ANALYSIS AND POINT COUNT REQUESTS MUST BE APPROVED BY FETU SUPERVISORS.***

LAB NUMBER	SAMPLE NUMBER	BUILDING NUMBER	BUILDING NAME	ROOM NUMBER AND/OR NAME	LOCATION IN ROOM	MATERIAL TYPE (DESCRIBE)	FRIABLE (YES or NO)
2407-0626	13	003DAN	Bldg A	Exterior Wall: behind stucco	S/E	Vapor Barrier Paper-walls	No
2407-0627	14	↓	↓	↓	S/W	↓	↓
2407-0628	15	↓	↓	↓	West	↓	↓
2407-0629	16	004DAN	Utility & Classroom Bldg B	Rm. 38	South	12x12 Lt. Brown Floor Tile w/ Mastic (over concrete)	No
2407-0630	17	↓	↓	↓	N/W	↓	↓
2407-0631	18	↓	↓	Rm. 37	N/W	↓	↓
2407-0632	19	↓	↓	Rm. 38: N/W sink area	(patch) - N/E	12x12 Brown Floor Tile w/ Mastic (over concrete)	No
2407-0633	20	↓	↓	↓	- S/E	↓	↓
2407-0634	21	↓	↓	↓	- South	↓	↓
2407-0635	22	↓	↓	Exterior Wall: behind stucco	N/E	Vapor Barrier Paper-walls	No
2407-0636	23	↓	↓	↓	S/E	↓	↓
2407-0637	24	↓	↓	↓	S/W	↓	↓

	NAME (PRINT & SIGN)	DEPT./AREA/CONSULTANT	# OF SAMPLES	DATE	TIME
Relinquished By:	E. Bracamontes	CNS Env.	12	07-08-2024	12:00p
Received By:	Arturo Cotos	FSD Lab	12	7/8/24	12:05pm
Relinquished By:					
Received By:					

Maximo Work Order Number: 38050584 Project Type: ☐ Maintenance (MA) ☐ Deferred Maintenance ☐ Bond (specify: K,R,Y,Q) ☐ Other:

FETU USE ONLY

FETU REVIEWED BY: RUSH? ☐ Yes ☐ No APPROVAL:

FETU REVIEW DATE: 7-8-24 POINT COUNT? ☐ Yes ☐ No PT. CT. RUSH? ☐ Yes ☐ No APPROVAL:

Los Angeles Unified School District
Facilities Services Division Laboratory
1449 S. San Pedro St.
Los Angeles, CA 90015
(213)745-1138

Asbestos Bulk Sample Analysis Laboratory Report

Laboratory Report

BASSETT ST ELEM

2323

NVLAP (TESTING) LAB# 101505-0
Method EPA/600/R-93/116(MOD) July 1993
Date Received: 07/08/2024

LAUSD Lab#	MIC	Date Analyzed	BUILDING/AREA SAMPLED	MATERIAL DESCRIPTION	CHR %	AM %	CROC %	TREM %	ACT %	ANTH %	TOTAL %	MATERIAL BACKGROUND
2024070626	AC	07/10/2024	003DAN : BLDG. A EXTERIOR WALL: BEHIND STUCCO SE	HOMOGENEOUS; NON-FRIABLE; BLACK; VAPOR BARRIER; FELT/ TAR	0	0	0	0	0	0	0	80% CELLULOSE TAR
2024070627	AC	07/10/2024	003DAN : BLDG. A EXTERIOR WALL: BEHIND STUCCO SW	HOMOGENEOUS; NON-FRIABLE; BLACK; VAPOR BARRIER; FELT/ TAR	0	0	0	0	0	0	0	80% CELLULOSE TAR
2024070628	AC	07/10/2024	003DAN : BLDG. A EXTERIOR WALL: BEHIND STUCCO W	HOMOGENEOUS; NON-FRIABLE; BLACK; VAPOR BARRIER; FELT/ TAR	0	0	0	0	0	0	0	80% CELLULOSE TAR
2024070629-A	AC	07/10/2024	004DAN : UTILITY & CLSRM BLDG. B RM 38 S	HOMOGENEOUS; NON-FRIABLE; BROWN; FLOOR TILE; VINYL	0	0	0	0	0	0	0	BINDER, CARBONATES
2024070629-B	AC	07/10/2024	004DAN : UTILITY & CLSRM BLDG. B RM 38 S	HOMOGENEOUS; NON-FRIABLE; BLACK; MASTIC; TAR	5	0	0	0	0	0	5	TAR
2024070630-A	AC	07/10/2024	004DAN : UTILITY & CLSRM BLDG. B RM 38 NW	HOMOGENEOUS; NON-FRIABLE; BROWN; FLOOR TILE; VINYL	0	0	0	0	0	0	0	BINDER, CARBONATES
2024070630-B	AC	07/10/2024	004DAN : UTILITY & CLSRM BLDG. B RM 38 NW	HOMOGENEOUS; NON-FRIABLE; BLACK; MASTIC; TAR	5	0	0	0	0	0	5	TAR

Lab Supervisor Signature and Date _____ 7 / 11 / 24

Signature of Analyst _____

Note: 0%: No Asbestos Detected; <1%: Asbestos Detected Above 0% and Below or Equal to 1%
NA: Not Applicable. ""Quantification done by optical estimate"" 1 - 5 % considered non-quantifiable
This report relates to only the material tested. An asterisk '*' indicates preliminary results.
The laboratory is not responsible for samples and data collected by personnel who are not part of the laboratory.

This report is not used by LAUSD to claim product endorsement by NVLAP
or any agency of the U.S. Government.
This report may not be reproduced except in its entirety.

Los Angeles Unified School District
Facilities Services Division Laboratory
1449 S. San Pedro St.
Los Angeles, CA 90015
(213)745-1138

Asbestos Bulk Sample Analysis Laboratory Report

Laboratory Report

BASSETT ST ELEM

2323

NVLAP (TESTING) LAB# 101505-0
Method EPA/600/R-93/116(MOD) July 1993
Date Received: 07/08/2024

LAUSD Lab#	MIC	Date Analyzed	BUILDING/AREA SAMPLED	MATERIAL DESCRIPTION	CHR %	AM %	CROC %	TREM %	ACT %	ANTH %	TOTAL %	MATERIAL BACKGROUND
2024070631-A	AC	07/10/2024	004DAN : UTILITY & CLSRM BLDG. B RM 37 NW	HOMOGENEOUS; NON-FRIABLE; BROWN; FLOOR TILE; VINYL	0	0	0	0	0	0	0	BINDER, CARBONATES
2024070631-B	AC	07/10/2024	004DAN : UTILITY & CLSRM BLDG. B RM 37 NW	HOMOGENEOUS; NON-FRIABLE; BLACK; MASTIC; TAR	5	0	0	0	0	0	5	TAR
2024070632-A	AC	07/10/2024	004DAN : UTILITY & CLSRM BLDG. B RM 38: NW SINK AREA (PATCH) NE	HOMOGENEOUS; NON-FRIABLE; BROWN; FLOOR TILE; VINYL	0	0	0	0	0	0	0	BINDER, CARBONATES
2024070632-B	AC	07/10/2024	004DAN : UTILITY & CLSRM BLDG. B RM 38: NW SINK AREA (PATCH) NE	HOMOGENEOUS; NON-FRIABLE; YELLOW; ADHESIVE; RESIN-LIKE	0	0	0	0	0	0	0	ADHESIVE
2024070632-C	AC	07/10/2024	004DAN : UTILITY & CLSRM BLDG. B RM 38: NW SINK AREA (PATCH) NE	HOMOGENEOUS; NON-FRIABLE; BLACK; MASTIC; TAR	5	0	0	0	0	0	5	TAR
2024070633-A	AC	07/10/2024	004DAN : UTILITY & CLSRM BLDG. B RM 38: NW SINK AREA (PATCH) SE	HOMOGENEOUS; NON-FRIABLE; BROWN; FLOOR TILE; VINYL	0	0	0	0	0	0	0	BINDER, CARBONATES
2024070633-B	AC	07/10/2024	004DAN : UTILITY & CLSRM BLDG. B RM 38: NW SINK AREA (PATCH) SE	HOMOGENEOUS; NON-FRIABLE; YELLOW; ADHESIVE; RESIN-LIKE	0	0	0	0	0	0	0	ADHESIVE

Lab Supervisor Signature and Date _____ 7 / 11 / 24

Signature of Analyst _____

Note: 0%: No Asbestos Detected; <1%: Asbestos Detected Above 0% and Below or Equal to 1%
NA: Not Applicable. **Quantification done by optical estimate** 1 - 5 % considered non-quantifiable.
This report relates to only the material tested. An asterisk '*' indicates preliminary results.
The laboratory is not responsible for samples and data collected by personnel who are not part of the laboratory.

This report is not used by LAUSD to claim product endorsement by NVLAP or any agency of the U.S. Government.
This report may not be reproduced except in its entirety.

Los Angeles Unified School District
Facilities Services Division Laboratory
1449 S. San Pedro St.
Los Angeles, CA 90015
(213)745-1138

Asbestos Bulk Sample Analysis Laboratory Report

Laboratory Report

BASSETT ST ELEM

2323

NVLAP (TESTING) LAB# 101505-0
Method EPA/600/R-93/116(MOD) July 1993
Date Received: 07/08/2024

LAUSD Lab#	MIC	Date Analyzed	BUILDING/AREA SAMPLED	MATERIAL DESCRIPTION	CHR %	AM %	CROC %	TREM %	ACT %	ANTH %	TOTAL %	MATERIAL BACKGROUND
2024070633-C	AC	07/10/2024	004DAN : UTILITY & CLSRM BLDG. B RM 38: NW SINK AREA (PATCH) SE	HOMOGENEOUS; NON-FRIABLE; BLACK; MASTIC; TAR	5	0	0	0	0	0	5	TAR
2024070634-A	AC	07/10/2024	004DAN : UTILITY & CLSRM BLDG. B RM 38: NW SINK AREA (PATCH) S	HOMOGENEOUS; NON-FRIABLE; BROWN; FLOOR TILE; VINYL	0	0	0	0	0	0	0	BINDER, CARBONATES
2024070634-B	AC	07/10/2024	004DAN : UTILITY & CLSRM BLDG. B RM 38: NW SINK AREA (PATCH) S	HOMOGENEOUS; NON-FRIABLE; YELLOW; ADHESIVE; RESIN-LIKE	0	0	0	0	0	0	0	ADHESIVE
2024070634-C	AC	07/10/2024	004DAN : UTILITY & CLSRM BLDG. B RM 38: NW SINK AREA (PATCH) S	HOMOGENEOUS; NON-FRIABLE; BLACK; MASTIC; TAR	5	0	0	0	0	0	5	TAR
2024070635	AC	07/10/2024	004DAN : UTILITY & CLSRM BLDG. B EXTERIOR WALL: BEHIND STUCCO NE	HOMOGENEOUS; NON-FRIABLE; BLACK; VAPOR BARRIER; FELT/ TAR	0	0	0	0	0	0	0	80% CELLULOSE TAR
2024070636	AC	07/10/2024	004DAN : UTILITY & CLSRM BLDG. B EXTERIOR WALL: BEHIND STUCCO SE	HOMOGENEOUS; NON-FRIABLE; BLACK; VAPOR BARRIER; FELT/ TAR	0	0	0	0	0	0	0	80% CELLULOSE TAR
2024070637	AC	07/10/2024	004DAN : UTILITY & CLSRM BLDG. B EXTERIOR WALL: BEHIND STUCCO SW	HOMOGENEOUS; NON-FRIABLE; BLACK; VAPOR BARRIER; FELT/ TAR	0	0	0	0	0	0	0	80% CELLULOSE TAR

Lab Supervisor Signature and Date _____ 7 / 11 / 24

Signature of Analyst _____

Note: 0%: No Asbestos Detected; <1%: Asbestos Detected Above 0% and Below or Equal to 1%
NA: Not Applicable. ""Quantification done by optical estimate"" 1 - 5 % considered non-quantifiable.
This report relates to only the material tested. An asterisk '*' indicates preliminary results.
The laboratory is not responsible for samples and data collected by personnel who are not part of the laboratory.

This report is not used by LAUSD to claim product endorsement by NVLAP or any agency of the U.S. Government.
This report may not be reproduced except in its entirety.

LOS ANGELES UNIFIED SCHOOL DISTRICT
FACILITIES SERVICES DIVISION
CHAIN-OF-CUSTODY FOR BULK ANALYSIS

54174

SITE NAME: Bassett Elementary School CODE: 2323 PROJECT DESC ADA Improvements COLIN #: 10373370

SAMPLED BY: Eric Bracamontes DATE SAMPLED: 07-01-2024 DEPT. / CONSULTANT: CNS Environmental, Inc. TEL: (714) 525-5115

Fill in all information legibly and precisely. Original must be submitted with the samples. Make a copy before submitting samples. Results and a copy of the Chain of Custody (COC) with sample numbers will be submitted to FETU when analysis is completed. ***USE BLACK/BLUE INK ONLY. DO NOT USE WHITE OUT! ALL RUSH ANALYSIS AND POINT COUNT REQUESTS MUST BE APPROVED BY FETU SUPERVISORS.***

LAB NUMBER	SAMPLE NUMBER	BUILDING NUMBER	BUILDING NAME	ROOM NUMBER AND/OR NAME	LOCATION IN ROOM	MATERIAL TYPE (DESCRIBE)	FRIABLE (YES or NO)
2407-0638	25	005DAN	Bldg C	Faculty R/R	N/E	1"x1" Brown Ceramic Floor Tile w/ Grout (over concrete)	No
2407-0639	26	↓	↓	↓	North	↓	↓
2407-0640	27	↓	↓	↓	N/W	↓	↓
2407-0641	28	↓	↓	Boy's R/R	N/W	Green/Lt. Green Ceramic Floor Tile w/ Grout (over concrete)	No
2407-0642	29	↓	↓	↓	North	↓	↓
2407-0643	30	↓	↓	↓	Center	↓	↓
2407-0644	31	↓	↓	↓	North	White Ceramic Wall Tile w/ Grout & Mortar	No
2407-0645	32	↓	↓	↓	East	↓	↓
2407-0646	33	↓	↓	↓	West	↓	↓
2407-0647	34	↓	↓	↓	(N/W area) - N/W	Joint Compound assoc. w/ Wood Wall	No
2407-0648	35	↓	↓	↓	- ↓	↓	↓
2407-0649	36	↓	↓	↓	- West	↓	↓

	NAME (PRINT & SIGN)	DEPT./AREA/CONSULTANT	# OF SAMPLES	DATE	TIME
Relinquished By:	E. Bracamontes	CNS Env.	12	07-08-2024	12:00p
Received By:	Azuno Cosos	FSD LAS	12	7/8/24	2:00p
Relinquished By:					
Received By:					

Maximo Work Order Number: 38050584 Project Type: ☐ Maintenance (MA) ☐ Deferred Maintenance ☐ Bond (specify: K,R,Y,Q) ☐ Other:

FETU USE ONLY

FETU REVIEWED BY: M.R. RUSH? ☐ Yes ☐ No APPROVAL:

FETU REVIEW DATE: 7-8-24 POINT COUNT? ☐ Yes ☐ No PT. CT. RUSH? ☐ Yes ☐ No APPROVAL:

Los Angeles Unified School District
Facilities Services Division Laboratory
1449 S. San Pedro St.
Los Angeles, CA 90015
(213)745-1138

Asbestos Bulk Sample Analysis Laboratory Report

Laboratory Report

BASSETT ST ELEM

2323

NVLAP (TESTING) LAB# 101505-0
Method EPA/600/R-93/116(MOD) July 1993
Date Received: 07/08/2024

LAUSD Lab#	MIC	Date Analyzed	BUILDING/AREA SAMPLED	MATERIAL DESCRIPTION	CHR %	AM %	CROC %	TREM %	ACT %	ANTH %	TOTAL %	MATERIAL BACKGROUND
2024070638-A	VP	07/11/2024	005DAN : BLDG. C FACULTY RR NE	HOMOGENEOUS; NON-FRIABLE; BROWN; CERAMIC TILES; SOLID	0	0	0	0	0	0	0	MINERAL FILLER
2024070638-B	VP	07/11/2024	005DAN : BLDG. C FACULTY RR NE	HOMOGENEOUS; NON-FRIABLE; DK.GRAY; GROUT; GRANULAR/ CHALKY	0	0	0	0	0	0	0	MINERAL FILLER
2024070638-C	VP	07/11/2024	005DAN : BLDG. C FACULTY RR NE	HOMOGENEOUS; NON-FRIABLE; WHITE; MORTAR; GRANULAR	0	0	0	0	0	0	0	MINERAL FILLER
2024070639-A	VP	07/11/2024	005DAN : BLDG. C FACULTY RR N	HOMOGENEOUS; NON-FRIABLE; BROWN; CERAMIC TILES; SOLID	0	0	0	0	0	0	0	MINERAL FILLER
2024070639-B	VP	07/11/2024	005DAN : BLDG. C FACULTY RR N	HOMOGENEOUS; NON-FRIABLE; DK.GRAY; GROUT; GRANULAR/ CHALKY	0	0	0	0	0	0	0	MINERAL FILLER
2024070639-C	VP	07/11/2024	005DAN : BLDG. C FACULTY RR N	HOMOGENEOUS; NON-FRIABLE; WHITE; MORTAR; GRANULAR	0	0	0	0	0	0	0	MINERAL FILLER
2024070640-A	VP	07/11/2024	005DAN : BLDG. C FACULTY RR NW	HOMOGENEOUS; NON-FRIABLE; BROWN; CERAMIC TILES; SOLID	0	0	0	0	0	0	0	MINERAL FILLER

Lab Supervisor Signature and Date _____ 7 / 12 / 24

Signature of Analyst _____

Note: 0%: No Asbestos Detected, <1%: Asbestos Detected Above 0% and Below or Equal to 1%
NA: Not Applicable. ""Quantification done by optical estimate"" 1 - 5 % considered non-quantifiable.
This report relates to only the material tested. An asterisk '*' indicates preliminary results.
The laboratory is not responsible for samples and data collected by personnel who are not part of the laboratory.

This report is not used by LAUSD to claim product endorsement by NVLAP or any agency of the U.S. Government.
This report may not be reproduced except in its entirety.

Los Angeles Unified School District
Facilities Services Division Laboratory
1449 S. San Pedro St.
Los Angeles, CA 90015
(213)745-1138

Asbestos Bulk Sample Analysis Laboratory Report

Laboratory Report

BASSETT ST ELEM

2323

NVLAP (TESTING) LAB# 101505-0
Method EPA/600/R-93/116(MOD) July 1993
Date Received: 07/08/2024

LAUSD Lab#	MIC	Date Analyzed	BUILDING/AREA SAMPLED	MATERIAL DESCRIPTION	CHR %	AM %	CROC %	TREM %	ACT %	ANTH %	TOTAL %	MATERIAL BACKGROUND
2024070640-B	VP	07/11/2024	005DAN : BLDG. C FACULTY RR NW	HOMOGENEOUS; NON-FRIABLE; DK.GRAY; GROUT; GRANULAR/ CHALKY	0	0	0	0	0	0	0	MINERAL FILLER
2024070640-C	VP	07/11/2024	005DAN : BLDG. C FACULTY RR NW	HOMOGENEOUS; NON-FRIABLE; WHITE; MORTAR; GRANULAR	0	0	0	0	0	0	0	MINERAL FILLER
2024070641-A	VP	07/11/2024	005DAN : BLDG. C BOY'S RR NW	HOMOGENEOUS; NON-FRIABLE; GREEN; CERAMIC TILES; SOLID	0	0	0	0	0	0	0	MINERAL FILLER
2024070641-B	VP	07/11/2024	005DAN : BLDG. C BOY'S RR NW	HOMOGENEOUS; NON-FRIABLE; OFF WHITE; CERAMIC TILES; SOLID	0	0	0	0	0	0	0	MINERAL FILLER
2024070641-C	VP	07/11/2024	005DAN : BLDG. C BOY'S RR NW	HOMOGENEOUS; NON-FRIABLE; DARK BROWN; GROUT; GRANULAR	0	0	0	0	0	0	0	MINERAL FILLER
2024070642-A	VP	07/11/2024	005DAN : BLDG. C BOY'S RR N	HOMOGENEOUS; NON-FRIABLE; GREEN; CERAMIC TILES; SOLID	0	0	0	0	0	0	0	MINERAL FILLER
2024070642-B	VP	07/11/2024	005DAN : BLDG. C BOY'S RR N	HOMOGENEOUS; NON-FRIABLE; OFF WHITE; CERAMIC TILES; SOLID	0	0	0	0	0	0	0	MINERAL FILLER

Lab Supervisor Signature and Date _____ 7 / 12 / 24

Signature of Analyst _____

Note: 0%: No Asbestos Detected; <1%: Asbestos Detected Above 0% and Below or Equal to 1%
NA: Not Applicable. ""Quantification done by optical estimate"" 1 - 5 % considered non-quantifiable.
This report relates to only the material tested. An asterisk '*' indicates preliminary results.
The laboratory is not responsible for samples and data collected by personnel who are not part of the laboratory.

This report is not used by LAUSD to claim product endorsement by NVLAP
or any agency of the U.S. Government.
This report may not be reproduced except in its entirety.

Los Angeles Unified School District
Facilities Services Division Laboratory
1449 S. San Pedro St.
Los Angeles, CA 90015
(213)745-1138

Asbestos Bulk Sample Analysis Laboratory Report

Laboratory Report

BASSETT ST ELEM
2323

NVLAP (TESTING) LAB# 101505-0
Method EPA/600/R-93/116(MOD) July 1993
Date Received: 07/08/2024

LAUSD Lab#	MIC	Date Analyzed	BUILDING/AREA SAMPLED	MATERIAL DESCRIPTION	CHR %	AM %	CROC %	TREM %	ACT %	ANTH %	TOTAL %	MATERIAL BACKGROUND
2024070642-C	VP	07/11/2024	005DAN : BLDG. C BOY'S RR N	HOMOGENEOUS; NON-FRIABLE; DARK BROWN; GROUT; GRANULAR	0	0	0	0	0	0	0	MINERAL FILLER
2024070642-D	VP	07/11/2024	005DAN : BLDG. C BOY'S RR N	HOMOGENEOUS; NON-FRIABLE; WHITE; GROUT; GRANULAR	0	0	0	0	0	0	0	MINERAL FILLER
2024070643-A	VP	07/11/2024	005DAN : BLDG. C BOY'S RR CTR	HOMOGENEOUS; NON-FRIABLE; GREEN; CERAMIC TILES; SOLID	0	0	0	0	0	0	0	MINERAL FILLER
2024070643-B	VP	07/11/2024	005DAN : BLDG. C BOY'S RR CTR	HOMOGENEOUS; NON-FRIABLE; DK.GRAY; GROUT; GRANULAR/ CHALKY	0	0	0	0	0	0	0	MINERAL FILLER
2024070643-C	VP	07/11/2024	005DAN : BLDG. C BOY'S RR CTR	HOMOGENEOUS; NON-FRIABLE; WHITE; GROUT; GRANULAR	0	0	0	0	0	0	0	MINERAL FILLER
2024070643-D	VP	07/11/2024	005DAN : BLDG. C BOY'S RR CTR	HOMOGENEOUS; NON-FRIABLE; GRAY; CONCRETE; CEMENTITIOUS	0	0	0	0	0	0	0	MINERAL FILLER
2024070644-A	VP	07/11/2024	005DAN : BLDG. C BOY'S RR N	HOMOGENEOUS; NON-FRIABLE; WHITE; CERAMIC TILES; SOLID	0	0	0	0	0	0	0	MINERAL FILLER

COMMENT(S): NO GROUT PRESENT

Lab Supervisor Signature and Date _____ 7 / 12 / 24

Signature of Analyst _____

Note: 0%: No Asbestos Detected; <1%: Asbestos Detected Above 0% and Below or Equal to 1%
NA: Not Applicable. ""Quantification done by optical estimate"" 1 - 5 % considered non-quantifiable.
This report relates to only the material tested. An asterisk '*' indicates preliminary results.
The laboratory is not responsible for samples and data collected by personnel who are not part of the laboratory.

This report is not used by LAUSD to claim product endorsement by NVLAP
or any agency of the U.S. Government.
This report may not be reproduced except in its entirety.

Los Angeles Unified School District
Facilities Services Division Laboratory
1449 S. San Pedro St.
Los Angeles, CA 90015
(213)745-1138

Asbestos Bulk Sample Analysis Laboratory Report

Laboratory Report

BASSETT ST ELEM
2323

NVLAP (TESTING) LAB# 101505-0
Method EPA/600/R-93/116(MOD) July 1993
Date Received: 07/08/2024

LAUSD Lab#	MIC	Date Analyzed	BUILDING/AREA SAMPLED	MATERIAL DESCRIPTION	CHR %	AM %	CROC %	TREM %	ACT %	ANTH %	TOTAL %	MATERIAL BACKGROUND
2024070644-B	VP	07/11/2024	005DAN : BLDG. C BOY'S RR N	HOMOGENEOUS; NON-FRIABLE; BEIGE; MORTAR; GRANULAR	0	0	0	0	0	0	0	MINERAL FILLER
2024070644-C	VP	07/11/2024	005DAN : BLDG. C BOY'S RR N	HOMOGENEOUS; NON-FRIABLE; GRAY; CONCRETE; CEMENTITIOUS	0	0	0	0	0	0	0	MINERAL FILLER
2024070645-A	VP	07/11/2024	005DAN : BLDG. C BOY'S RR E	HOMOGENEOUS; NON-FRIABLE; WHITE; CERAMIC TILES; SOLID	0	0	0	0	0	0	0	MINERAL FILLER COMMENT(S): NO GROUT & MORTAR PRESENT
2024070645-B	VP	07/11/2024	005DAN : BLDG. C BOY'S RR E	HOMOGENEOUS; NON-FRIABLE; GRAY; CONCRETE; CEMENTITIOUS	0	0	0	0	0	0	0	MINERAL FILLER
2024070646-A	VP	07/11/2024	005DAN : BLDG. C BOY'S RR W	HOMOGENEOUS; NON-FRIABLE; WHITE; CERAMIC TILES; SOLID	0	0	0	0	0	0	0	MINERAL FILLER COMMENT(S): NO GROUT PRESENT
2024070646-B	VP	07/11/2024	005DAN : BLDG. C BOY'S RR W	HOMOGENEOUS; NON-FRIABLE; BEIGE; MORTAR; GRANULAR	0	0	0	0	0	0	0	MINERAL FILLER
2024070646-C	VP	07/11/2024	005DAN : BLDG. C BOY'S RR W	HOMOGENEOUS; NON-FRIABLE; GRAY; CONCRETE; CEMENTITIOUS	0	0	0	0	0	0	0	MINERAL FILLER

Lab Supervisor Signature and Date _____ 7 / 12 / 24

Signature of Analyst _____

Note: 0%: No Asbestos Detected; <1%: Asbestos Detected Above 0% and Below or Equal to 1%
NA: Not Applicable. ""Quantification done by optical estimate"" 1 - 5 % considered non-quantifiable.
This report relates to only the material tested. An asterisk '*' indicates preliminary results.
The laboratory is not responsible for samples and data collected by personnel who are not part of the laboratory.

This report is not used by LAUSD to claim product endorsement by NVLAP
or any agency of the U.S. Government.
This report may not be reproduced except in its entirety.

Los Angeles Unified School District
Facilities Services Division Laboratory
1449 S. San Pedro St.
Los Angeles, CA 90015
(213)745-1138

Asbestos Bulk Sample Analysis Laboratory Report

Laboratory Report

BASSETT ST ELEM
2323

NVLAP (TESTING) LAB# 101505-0
Method EPA/600/R-93/116(MOD) July 1993
Date Received: 07/08/2024

LAUSD Lab#	MIC	Date Analyzed	BUILDING/AREA SAMPLED	MATERIAL DESCRIPTION	CHR %	AM %	CROC %	TREM %	ACT %	ANTH %	TOTAL %	MATERIAL BACKGROUND
2024070647-A	VP	07/11/2024	005DAN : BLDG. C BOY'S RR (NW AREA) NW	HOMOGENEOUS; NON-FRIABLE; WHITE; PAINT; PAINT MATERIAL	0	0	0	0	0	0	0	PAINT
2024070647-B	VP	07/11/2024	005DAN : BLDG. C BOY'S RR (NW AREA) NW	HOMOGENEOUS; NON-FRIABLE; WHITE; JOINT COMPOUND; CHALKY	0	0	0	0	0	0	0	MINERAL FILLER
2024070647-C	VP	07/11/2024	005DAN : BLDG. C BOY'S RR (NW AREA) NW	HOMOGENEOUS; NON-FRIABLE; BEIGE; PLASTER; GRANULAR	0	0	0	0	0	0	0	MINERAL FILLER
					COMMENT(S): SMALL AMOUNT OF MATERIAL							
2024070648-A	VP	07/11/2024	005DAN : BLDG. C BOY'S RR (NW AREA) NW	HOMOGENEOUS; NON-FRIABLE; WHITE; PAINT; PAINT MATERIAL	0	0	0	0	0	0	0	PAINT
2024070648-B	VP	07/11/2024	005DAN : BLDG. C BOY'S RR (NW AREA) NW	HOMOGENEOUS; NON-FRIABLE; WHITE; JOINT COMPOUND; CHALKY	0	0	0	0	0	0	0	MINERAL FILLER
2024070648-C	VP	07/11/2024	005DAN : BLDG. C BOY'S RR (NW AREA) NW	HOMOGENEOUS; NON-FRIABLE; BEIGE; PLASTER; GRANULAR	0	0	0	0	0	0	0	MINERAL FILLER
					COMMENT(S): SMALL AMOUNT OF MATERIAL							
2024070649-A	VP	07/11/2024	005DAN : BLDG. C BOY'S RR (NW AREA) W	HOMOGENEOUS; NON-FRIABLE; WHITE; PAINT; PAINT MATERIAL	0	0	0	0	0	0	0	PAINT

Lab Supervisor Signature and Date _____ 7 / 12 / 24

Signature of Analyst _____

Note: 0%: No Asbestos Detected; <1%: Asbestos Detected Above 0% and Below or Equal to 1%
NA: Not Applicable. ""Quantification done by optical estimate"" 1 - 5 % considered non-quantifiable.
This report relates to only the material tested. An asterisk '*' indicates preliminary results.
The laboratory is not responsible for samples and data collected by personnel who are not part of the laboratory.

This report is not used by LAUSD to claim product endorsement by NVLAP
or any agency of the U.S. Government.
This report may not be reproduced except in its entirety.

Los Angeles Unified School District
Facilities Services Division Laboratory
1449 S. San Pedro St.
Los Angeles, CA 90015
(213)745-1138

Asbestos Bulk Sample Analysis Laboratory Report

Laboratory Report

BASSETT ST ELEM
2323

NVLAP (TESTING) LAB# 101505-0
Method EPA/600/R-93/116(MOD) July 1993
Date Received: 07/08/2024

LAUSD Lab#	MIC	Date Analyzed	BUILDING/AREA SAMPLED	MATERIAL DESCRIPTION	CHR %	AM %	CROC %	TREM %	ACT %	ANTH %	TOTAL %	MATERIAL BACKGROUND
2024070649-B	VP	07/11/2024	005DAN : BLDG. C BOY'S RR (NW AREA) W	HOMOGENEOUS; NON-FRIABLE; WHITE; JOINT COMPOUND; CHALKY	0	0	0	0	0	0	0	MINERAL FILLER
2024070649-C	VP	07/11/2024	005DAN : BLDG. C BOY'S RR (NW AREA) W	HOMOGENEOUS; NON-FRIABLE; BEIGE; PLASTER; GRANULAR	0	0	0	0	0	0	0	MINERAL FILLER
2024070649-D	VP	07/11/2024	005DAN : BLDG. C BOY'S RR (NW AREA) W	HOMOGENEOUS; NON-FRIABLE; LITE BROWN; WOOD; FIBROUS	0	0	0	0	0	0	0	100% CELLULOSE

Lab Supervisor Signature and Date _____ 7 / 12 / 24

Signature of Analyst _____

Note: 0%: No Asbestos Detected; <1%: Asbestos Detected Above 0% and Below or Equal to 1%
NA: Not Applicable. ""Quantification done by optical estimate"" 1 - 5 % considered non-quantifiable.
This report relates to only the material tested. An asterisk '*' indicates preliminary results.
The laboratory is not responsible for samples and data collected by personnel who are not part of the laboratory.

This report is not used by LAUSD to claim product endorsement by NVLAP
or any agency of the U.S. Government.
This report may not be reproduced except in its entirety.

LOS ANGELES UNIFIED SCHOOL DISTRICT
FACILITIES SERVICES DIVISION
CHAIN-OF-CUSTODY FOR BULK ANALYSIS

54175

SITE NAME: Bassett Elementary School CODE: 2323 PROJECT DESC ADA Improvements COLIN #: 10373370

SAMPLED BY: Eric Bracamontes DATE SAMPLED: 07-01-2024 DEPT. / CONSULTANT: CNS Environmental, Inc. TEL: (714) 525-5115

Fill in all information legibly and precisely. Original must be submitted with the samples. Make a copy before submitting samples. Results and a copy of the Chain of Custody (COC) with sample numbers will be submitted to FETU when analysis is completed. ***USE BLACK/BLUE INK ONLY. DO NOT USE WHITE OUT! ALL RUSH ANALYSIS AND POINT COUNT REQUESTS MUST BE APPROVED BY FETU SUPERVISORS.***

LAB NUMBER	SAMPLE NUMBER	BUILDING NUMBER	BUILDING NAME	ROOM NUMBER AND/OR NAME	LOCATION IN ROOM	MATERIAL TYPE (DESCRIBE)	FRIABLE (YES or NO)
2407-0650	37	OOSDAN	Bldg C	Exterior Wall: behind stucco	East	Vapor Barrier Paper-walls	No
2407-0651	38	↓	↓	↓	S/E	↓	↓
2407-0652	39	↓	↓	↓	S/W	↓	↓

	NAME (PRINT & SIGN)	DEPT./AREA/CONSULTANT	# OF SAMPLES	DATE	TIME
Relinquished By:	E.Bracamontes [signature]	CNS Env.	3	07-08-2024	12:00p
Received By:	Arturo Cuevas [signature]	FSD LAB	3	7/8/24	12:00pm
Relinquished By:					
Received By:					

Maximo Work Order Number: 38050584 Project Type: ☐ Maintenance (MA) ☐ Deferred Maintenance ☐ Bond (specify: K,R,Y,Q) ☐ Other:

FETU USE ONLY

FETU REVIEWED BY: [signature] RUSH? ☐ Yes ☐ No APPROVAL:

FETU REVIEW DATE: 7-8-24 POINT COUNT? ☐ Yes ☐ No PT. CT. RUSH? ☐ Yes ☐ No APPROVAL:

Los Angeles Unified School District
Facilities Services Division Laboratory
1449 S. San Pedro St.
Los Angeles, CA 90015
(213)745-1138

Asbestos Bulk Sample Analysis Laboratory Report

Laboratory Report

BASSETT ST ELEM

2323

NVLAP (TESTING) LAB# 101505-0
Method EPA/600/R-93/116(MOD) July 1993
Date Received: 07/08/2024

LAUSD Lab#	MIC	Date Analyzed	BUILDING/AREA SAMPLED	MATERIAL DESCRIPTION	CHR %	AM %	CROC %	TREM %	ACT %	ANTH %	TOTAL %	MATERIAL BACKGROUND
2024070650	VP	07/11/2024	005DAN : BLDG. C EXTERIOR WALL: BEHIND STUCCO E	HOMOGENEOUS; NON-FRIABLE; BLACK; VAPOR BARRIER; FELT/ TAR	0	0	0	0	0	0	0	90% CELLULOSE TAR
2024070651	VP	07/11/2024	005DAN : BLDG. C EXTERIOR WALL: BEHIND STUCCO SE	HOMOGENEOUS; NON-FRIABLE; BLACK; VAPOR BARRIER; FELT/ TAR	0	0	0	0	0	0	0	90% CELLULOSE TAR
2024070652	VP	07/11/2024	005DAN : BLDG. C EXTERIOR WALL: BEHIND STUCCO SW	HOMOGENEOUS; NON-FRIABLE; BLACK; VAPOR BARRIER; FELT/ TAR	0	0	0	0	0	0	0	90% CELLULOSE TAR

Lab Supervisor Signature and Date _____ 7 / 12 / 24

Signature of Analyst _____

Note: 0%: No Asbestos Detected; <1%: Asbestos Detected Above 0% and Below or Equal to 1%
NA: Not Applicable. ""Quantification done by optical estimate"" 1 - 5 % considered non-quantifiable.
This report relates to only the material tested. An asterisk '*' indicates preliminary results.
The laboratory is not responsible for samples and data collected by personnel who are not part of the laboratory.

This report is not used by LAUSD to claim product endorsement by NVLAP
or any agency of the U.S. Government.
This report may not be reproduced except in its entirety.

LOS ANGELES UNIFIED SCHOOL DISTRICT
FACILITIES SERVICES DIVISION
CHAIN-OF-CUSTODY FOR BULK ANALYSIS

54271

SITE NAME: Bassett Elementary School CODE: 2323 PROJECT DESC ADA Improvements COLIN #: 10373370

SAMPLED BY: Eric Bracamontes DATE SAMPLED: 07-11-2024 DEPT. / CONSULTANT: CNS Environmental, Inc. TEL: (714) 525-5115

Fill in all information legibly and precisely. Original must be submitted with the samples. Make a copy before submitting samples. Results and a copy of the Chain of Custody (COC) with sample numbers will be submitted to FETU when analysis is completed. ***USE BLACK/BLUE INK ONLY. DO NOT USE WHITE OUT! ALL RUSH ANALYSIS AND POINT COUNT REQUESTS MUST BE APPROVED BY FETU SUPERVISORS.***

LAB NUMBER	SAMPLE NUMBER	BUILDING NUMBER	BUILDING NAME	ROOM NUMBER AND/OR NAME	LOCATION IN ROOM	MATERIAL TYPE (DESCRIBE)	FRIABLE (YES or NO)
2407-1481	40	006DAN	Bldg D	Rm. 39	N/E	12x12 Blue, 12x12 Lt. Blue Floor Tile - Mixed w/ Adhesive (over concrete)	No
2407-1482	41	↓	↓	↓	S/E	↓	↓
2407-1483	42	↓	↓	↓	S/W	↓	↓
2407-1484	43	↓	↓	Girl's R/R	S/E	Green/Lt. Green Ceramic Floor Tile w/ Grout (over concrete)	No
2407-1485	44	↓	↓	Boy's R/R	S/W	↓	↓
2407-1486	45	↓	↓	Faculty R/R	S/E	↓	↓
2407-1487	46	↓	↓	Girl's R/R	East	White Ceramic Wall Tile w/ Grout & Mortar (Core Sample)	No
2407-1488	47	↓	↓	↓	South	↓	↓
2407-1489	48	↓	↓	Boy's R/R	S/E	↓	↓
2407-1490	49	↓	↓	Exterior Wall: behind stucco	West	Vapor Barrier Paper - walls	No
2407-1491	50	↓	↓	↓	South	↓	↓
2407-1492	51	↓	↓	↓	East	↓	↓

	NAME (PRINT & SIGN)	DEPT./AREA/CONSULTANT	# OF SAMPLES	DATE	TIME
Relinquished By:	E. Bracamontes	CNS Env.	12	07-16-2024	8:30p
Received By:	Ahmad Abdelhalim /	CNS	12	07-17-24	12:20 Pm
Relinquished By:	Ahmad Abdelhalim /	CNS	12	07-17-24	12:45 pm
Received By:	VY PHAN	FSD Lab	12	07/17/24	12:45pm

Maximo Work Order Number: 38050584 Project Type: ☒ Maintenance (MA) ☐ Deferred Maintenance ☐ Bond (specify: K,R,Y,Q) ☐ Other:

FETU USE ONLY

FETU REVIEWED BY: RUSH? ☒ Yes ☐ No APPROVAL:

FETU REVIEW DATE: 7/17/24 POINT COUNT? ☐ Yes ☐ No PT. CT. RUSH? ☐ Yes ☐ No APPROVAL:

Los Angeles Unified School District
Facilities Services Division Laboratory
1449 S. San Pedro St.
Los Angeles, CA 90015
(213)745-1138

Asbestos Bulk Sample Analysis Laboratory Report

Laboratory Report

BASSETT ST ELEM

2323

NVLAP (TESTING) LAB# 101505-0
Method EPA/600/R-93/116(MOD) July 1993
Date Received: 07/17/2024

LAUSD Lab#	MIC	Date Analyzed	BUILDING/AREA SAMPLED	MATERIAL DESCRIPTION	CHR %	AM %	CROC %	TREM %	ACT %	ANTH %	TOTAL %	MATERIAL BACKGROUND
2024071481-A	AC	07/17/2024	006DAN : BLDG D RM. 39 N/E	HOMOGENEOUS; NON-FRIABLE; BLUE; FLOOR TILE; VINYL	0	0	0	0	0	0	0	BINDER, CARBONATES
				COMMENT(S): INSUFFICIENT BLACK MASTIC FOR ANALYSIS								
2024071481-B	AC	07/17/2024	006DAN : BLDG D RM. 39 N/E	HOMOGENEOUS; NON-FRIABLE; YELLOW; ADHESIVE; RESIN-LIKE	0	0	0	0	0	0	0	ADHESIVE
2024071481-C	AC	07/17/2024	006DAN : BLDG D RM. 39 N/E	HOMOGENEOUS; NON-FRIABLE; WHITE; ENCAPSULATION; COATED MATERIAL	0	0	0	0	0	0	0	BINDER
2024071481-D	AC	07/17/2024	006DAN : BLDG D RM. 39 N/E	HOMOGENEOUS; NON-FRIABLE; LT. BLUE; FLOOR TILE; VINYL	0	0	0	0	0	0	0	BINDER, CARBONATES
				COMMENT(S): INSUFFICIENT BLACK MASTIC FOR ANALYSIS								
2024071481-E	AC	07/17/2024	006DAN : BLDG D RM. 39 N/E	HOMOGENEOUS; NON-FRIABLE; YELLOW; ADHESIVE; RESIN-LIKE	0	0	0	0	0	0	0	ADHESIVE
2024071481-F	AC	07/17/2024	006DAN : BLDG D RM. 39 N/E	HOMOGENEOUS; NON-FRIABLE; WHITE; ENCAPSULATION; COATED MATERIAL	0	0	0	0	0	0	0	BINDER
2024071482-A	AC	07/17/2024	006DAN : BLDG D RM. 39 S/E	HOMOGENEOUS; NON-FRIABLE; BLUE; FLOOR TILE; VINYL	0	0	0	0	0	0	0	BINDER, CARBONATES

Lab Supervisor Signature and Date _____ 7 / 18 / 24

Signature of Analyst _____

Note: 0%: No Asbestos Detected; <1%: Asbestos Detected Above 0% and Below or Equal to 1%
NA: Not Applicable. ""Quantification done by optical estimate"" 1 - 5 % considered non-quantifiable.
This report relates to only the material tested. An asterisk '*' indicates preliminary results.
The laboratory is not responsible for samples and data collected by personnel who are not part of the laboratory.

This report is not used by LAUSD to claim product endorsement by NVLAP
or any agency of the U.S. Government.
This report may not be reproduced except in its entirety.

Los Angeles Unified School District
Facilities Services Division Laboratory
1449 S. San Pedro St.
Los Angeles, CA 90015
(213)745-1138

Asbestos Bulk Sample Analysis Laboratory Report

Laboratory Report

BASSETT ST ELEM

2323

NVLAP (TESTING) LAB# 101505-0
Method EPA/600/R-93/116(MOD) July 1993
Date Received: 07/17/2024

LAUSD Lab#	MIC	Date Analyzed	BUILDING/AREA SAMPLED	MATERIAL DESCRIPTION	CHR %	AM %	CROC %	TREM %	ACT %	ANTH %	TOTAL %	MATERIAL BACKGROUND
2024071482-B	AC	07/17/2024	006DAN : BLDG D RM. 39 S/E	HOMOGENEOUS; NON-FRIABLE; YELLOW; ADHESIVE; RESIN-LIKE	0	0	0	0	0	0	0	ADHESIVE
2024071482-C	AC	07/17/2024	006DAN : BLDG D RM. 39 S/E	HOMOGENEOUS; NON-FRIABLE; GRAY; LEVELING MATERIAL; CHALKY	0	0	0	0	0	0	0	MINERAL FILLER
2024071482-D	AC	07/17/2024	006DAN : BLDG D RM. 39 S/E	HOMOGENEOUS; NON-FRIABLE; WHITE; ENCAPSULATION; COATED MATERIAL	0	0	0	0	0	0	0	BINDER
2024071482-E	AC	07/17/2024	006DAN : BLDG D RM. 39 S/E	HOMOGENEOUS; NON-FRIABLE; BLACK; MASTIC; TAR	2	0	0	0	0	0	2	TAR
					COMMENT(S): SMALL AMOUNT OF MATERIAL							
2024071482-F	AC	07/17/2024	006DAN : BLDG D RM. 39 S/E	HOMOGENEOUS; NON-FRIABLE; LT. BLUE; FLOOR TILE; VINYL	0	0	0	0	0	0	0	BINDER, CARBONATES
2024071482-G	AC	07/17/2024	006DAN : BLDG D RM. 39 S/E	HOMOGENEOUS; NON-FRIABLE; YELLOW; ADHESIVE; RESIN-LIKE	0	0	0	0	0	0	0	ADHESIVE
2024071482-H	AC	07/17/2024	006DAN : BLDG D RM. 39 S/E	HOMOGENEOUS; NON-FRIABLE; GRAY; LEVELING MATERIAL; CHALKY	0	0	0	0	0	0	0	MINERAL FILLER

Lab Supervisor Signature and Date _____ 7 / 18 / 24

Signature of Analyst _____

Note: 0%: No Asbestos Detected; <1%: Asbestos Detected Above 0% and Below or Equal to 1%
NA: Not Applicable. ""Quantification done by optical estimate"" 1 - 5 % considered non-quantifiable.
This report relates to only the material tested. An asterisk '*' indicates preliminary results.
The laboratory is not responsible for samples and data collected by personnel who are not part of the laboratory.

This report is not used by LAUSD to claim product endorsement by NVLAP
or any agency of the U.S. Government.
This report may not be reproduced except in its entirety.

Los Angeles Unified School District
Facilities Services Division Laboratory
1449 S. San Pedro St.
Los Angeles, CA 90015
(213)745-1138

Asbestos Bulk Sample Analysis Laboratory Report

Laboratory Report

BASSETT ST ELEM

2323

NVLAP (TESTING) LAB# 101505-0
Method EPA/600/R-93/116(MOD) July 1993
Date Received: 07/17/2024

LAUSD Lab#	MIC	Date Analyzed	BUILDING/AREA SAMPLED	MATERIAL DESCRIPTION	CHR %	AM %	CROC %	TREM %	ACT %	ANTH %	TOTAL %	MATERIAL BACKGROUND
2024071482-I	AC	07/17/2024	006DAN : BLDG D RM. 39 S/E	HOMOGENEOUS; NON-FRIABLE; WHITE; ENCAPSULATION; COATED MATERIAL	0	0	0	0	0	0	0	BINDER
2024071482-J	AC	07/17/2024	006DAN : BLDG D RM. 39 S/E	HOMOGENEOUS; NON-FRIABLE; BLACK; MASTIC; TAR	2	0	0	0	0	0	2	TAR
					COMMENT(S): SMALL AMOUNT OF MATERIAL							
2024071483-A	AC	07/17/2024	006DAN : BLDG D RM. 39 S/W	HOMOGENEOUS; NON-FRIABLE; BLUE; FLOOR TILE; VINYL	0	0	0	0	0	0	0	BINDER, CARBONATES
					COMMENT(S): INSUFFICIENT BLACK MASTIC FOR ANALYSIS							
2024071483-B	AC	07/17/2024	006DAN : BLDG D RM. 39 S/W	HOMOGENEOUS; NON-FRIABLE; YELLOW; ADHESIVE; RESIN-LIKE	0	0	0	0	0	0	0	ADHESIVE
2024071483-C	AC	07/17/2024	006DAN : BLDG D RM. 39 S/W	HOMOGENEOUS; NON-FRIABLE; GRAY; LEVELING MATERIAL; CHALKY	0	0	0	0	0	0	0	MINERAL FILLER
2024071483-D	AC	07/17/2024	006DAN : BLDG D RM. 39 S/W	HOMOGENEOUS; NON-FRIABLE; WHITE; ENCAPSULATION; COATED MATERIAL	0	0	0	0	0	0	0	BINDER
2024071483-E	AC	07/17/2024	006DAN : BLDG D RM. 39 S/W	HOMOGENEOUS; NON-FRIABLE; LT. BLUE; FLOOR TILE; VINYL	0	0	0	0	0	0	0	BINDER, CARBONATES
					COMMENT(S): INSUFFICIENT BLACK MASTIC FOR ANALYSIS							

Lab Supervisor Signature and Date _____ 7 / 18 / 24

Signature of Analyst _____

Note: 0%: No Asbestos Detected; <1%: Asbestos Detected Above 0% and Below or Equal to 1%
NA: Not Applicable. ""Quantification done by optical estimate"" 1 - 5 % considered non-quantifiable.
This report relates to only the material tested. An asterisk '*' indicates preliminary results.
The laboratory is not responsible for samples and data collected by personnel who are not part of the laboratory.

This report is not used by LAUSD to claim product endorsement by NVLAP
or any agency of the U.S. Government.
This report may not be reproduced except in its entirety.

Los Angeles Unified School District
Facilities Services Division Laboratory
1449 S. San Pedro St.
Los Angeles, CA 90015
(213)745-1138

Asbestos Bulk Sample Analysis Laboratory Report

Laboratory Report

BASSETT ST ELEM

2323

NVLAP (TESTING) LAB# 101505-0
Method EPA/600/R-93/116(MOD) July 1993
Date Received: 07/17/2024

LAUSD Lab#	MIC	Date Analyzed	BUILDING/AREA SAMPLED	MATERIAL DESCRIPTION	CHR %	AM %	CROC %	TREM %	ACT %	ANTH %	TOTAL %	MATERIAL BACKGROUND
2024071483-F	AC	07/17/2024	006DAN : BLDG D RM. 39 S/W	HOMOGENEOUS; NON-FRIABLE; YELLOW; ADHESIVE; RESIN-LIKE	0	0	0	0	0	0	0	ADHESIVE
2024071483-G	AC	07/17/2024	006DAN : BLDG D RM. 39 S/W	HOMOGENEOUS; NON-FRIABLE; GRAY; LEVELING MATERIAL; CHALKY	0	0	0	0	0	0	0	MINERAL FILLER
2024071483-H	AC	07/17/2024	006DAN : BLDG D RM. 39 S/W	HOMOGENEOUS; NON-FRIABLE; GRAY/ WHITE; ENCAPSULATION; COATED MATERIAL	0	0	0	0	0	0	0	BINDER
2024071484-A	AC	07/17/2024	006DAN : BLDG D GIRL'S R/R S/E	HOMOGENEOUS; NON-FRIABLE; GREEN; CERAMIC TILES; SOLID	0	0	0	0	0	0	0	MINERAL FILLER
2024071484-B	AC	07/17/2024	006DAN : BLDG D GIRL'S R/R S/E	HOMOGENEOUS; NON-FRIABLE; GRAY; GROUT; CHALKY	0	0	0	0	0	0	0	MINERAL FILLER
2024071484-C	AC	07/17/2024	006DAN : BLDG D GIRL'S R/R S/E	HOMOGENEOUS; NON-FRIABLE; GRAY; CONCRETE; GRANULAR/ CEMENTITIOUS	0	0	0	0	0	0	0	MINERAL FILLER
2024071484-D	AC	07/17/2024	006DAN : BLDG D GIRL'S R/R S/E	HOMOGENEOUS; NON-FRIABLE; LT.GREEN; CERAMIC TILES; SOLID	0	0	0	0	0	0	0	MINERAL FILLER

Lab Supervisor Signature and Date _____ 7 / 18 / 24

Signature of Analyst _____

Note: 0%: No Asbestos Detected; <1%: Asbestos Detected Above 0% and Below or Equal to 1%
NA: Not Applicable. ""Quantification done by optical estimate"" 1 - 5 % considered non-quantifiable.
This report relates to only the material tested. An asterisk '*' indicates preliminary results.
The laboratory is not responsible for samples and data collected by personnel who are not part of the laboratory.

This report is not used by LAUSD to claim product endorsement by NVLAP
or any agency of the U.S. Government.
This report may not be reproduced except in its entirety.

Los Angeles Unified School District
Facilities Services Division Laboratory
1449 S. San Pedro St.
Los Angeles, CA 90015
(213)745-1138

Asbestos Bulk Sample Analysis Laboratory Report

Laboratory Report

BASSETT ST ELEM

2323

NVLAP (TESTING) LAB# 101505-0
Method EPA/600/R-93/116(MOD) July 1993
Date Received: 07/17/2024

LAUSD Lab#	MIC	Date Analyzed	BUILDING/AREA SAMPLED	MATERIAL DESCRIPTION	CHR %	AM %	CROC %	TREM %	ACT %	ANTH %	TOTAL %	MATERIAL BACKGROUND
2024071484-E	AC	07/17/2024	006DAN : BLDG D GIRL'S R/R S/E	HOMOGENEOUS; NON-FRIABLE; GRAY; GROUT; CHALKY	0	0	0	0	0	0	0	MINERAL FILLER
2024071484-F	AC	07/17/2024	006DAN : BLDG D GIRL'S R/R S/E	HOMOGENEOUS; NON-FRIABLE; GRAY; CONCRETE; GRANULAR/ CEMENTITIOUS	0	0	0	0	0	0	0	MINERAL FILLER
2024071485-A	AC	07/17/2024	006DAN : BLDG D BOY'S R/R S/W	HOMOGENEOUS; NON-FRIABLE; GREEN; CERAMIC TILES; SOLID	0	0	0	0	0	0	0	MINERAL FILLER
2024071485-B	AC	07/17/2024	006DAN : BLDG D BOY'S R/R S/W	HOMOGENEOUS; NON-FRIABLE; GRAY; GROUT; CHALKY	0	0	0	0	0	0	0	MINERAL FILLER
2024071485-C	AC	07/17/2024	006DAN : BLDG D BOY'S R/R S/W	HOMOGENEOUS; NON-FRIABLE; GRAY; CONCRETE; GRANULAR/ CEMENTITIOUS	0	0	0	0	0	0	0	MINERAL FILLER
2024071485-D	AC	07/17/2024	006DAN : BLDG D BOY'S R/R S/W	HOMOGENEOUS; NON-FRIABLE; LT.GREEN; CERAMIC TILES; SOLID	0	0	0	0	0	0	0	MINERAL FILLER
2024071485-E	AC	07/17/2024	006DAN : BLDG D BOY'S R/R S/W	HOMOGENEOUS; NON-FRIABLE; GRAY; GROUT; CHALKY	0	0	0	0	0	0	0	MINERAL FILLER

Lab Supervisor Signature and Date _____ 7 / 18 / 24

Signature of Analyst _____

Note: 0%: No Asbestos Detected; <1%: Asbestos Detected Above 0% and Below or Equal to 1%
NA: Not Applicable. ""Quantification done by optical estimate"" 1 - 5 % considered non-quantifiable.
This report relates to only the material tested. An asterisk '*' indicates preliminary results.
The laboratory is not responsible for samples and data collected by personnel who are not part of the laboratory.

This report is not used by LAUSD to claim product endorsement by NVLAP
or any agency of the U.S. Government.
This report may not be reproduced except in its entirety.

Los Angeles Unified School District
Facilities Services Division Laboratory
1449 S. San Pedro St.
Los Angeles, CA 90015
(213)745-1138

Asbestos Bulk Sample Analysis Laboratory Report

Laboratory Report

BASSETT ST ELEM

2323

NVLAP (TESTING) LAB# 101505-0
Method EPA/600/R-93/116(MOD) July 1993
Date Received: 07/17/2024

LAUSD Lab#	MIC	Date Analyzed	BUILDING/AREA SAMPLED	MATERIAL DESCRIPTION	CHR %	AM %	CROC %	TREM %	ACT %	ANTH %	TOTAL %	MATERIAL BACKGROUND
2024071485-F	AC	07/17/2024	006DAN : BLDG D BOY'S R/R S/W	HOMOGENEOUS; NON-FRIABLE; GRAY; CONCRETE; GRANULAR/ CEMENTITIOUS	0	0	0	0	0	0	0	MINERAL FILLER
2024071486-A	AC	07/17/2024	006DAN : BLDG D FACULTY R/R S/E	HOMOGENEOUS; NON-FRIABLE; GREEN; CERAMIC TILES; SOLID	0	0	0	0	0	0	0	MINERAL FILLER
2024071486-B	AC	07/17/2024	006DAN : BLDG D FACULTY R/R S/E	HOMOGENEOUS; NON-FRIABLE; GRAY; GROUT; CHALKY	0	0	0	0	0	0	0	MINERAL FILLER
2024071486-C	AC	07/17/2024	006DAN : BLDG D FACULTY R/R S/E	HOMOGENEOUS; NON-FRIABLE; LT.GREEN; CERAMIC TILES; SOLID	0	0	0	0	0	0	0	MINERAL FILLER
2024071486-D	AC	07/17/2024	006DAN : BLDG D FACULTY R/R S/E	HOMOGENEOUS; NON-FRIABLE; GRAY; GROUT; CHALKY	0	0	0	0	0	0	0	MINERAL FILLER
2024071487-A	AC	07/17/2024	006DAN : BLDG D GIRL'S R/R EAST	HOMOGENEOUS; NON-FRIABLE; WHITE; CERAMIC TILES; SOLID	0	0	0	0	0	0	0	MINERAL FILLER
2024071487-B	AC	07/17/2024	006DAN : BLDG D GIRL'S R/R EAST	HOMOGENEOUS; NON-FRIABLE; GRAY; GROUT; CEMENTITIOUS	0	0	0	0	0	0	0	MINERAL FILLER

Lab Supervisor Signature and Date _____ 7 / 18 / 24

Signature of Analyst _____

Note: 0%: No Asbestos Detected; <1%: Asbestos Detected Above 0% and Below or Equal to 1%
NA: Not Applicable. ""Quantification done by optical estimate"" 1 - 5 % considered non-quantifiable.
This report relates to only the material tested. An asterisk '*' indicates preliminary results.
The laboratory is not responsible for samples and data collected by personnel who are not part of the laboratory.

This report is not used by LAUSD to claim product endorsement by NVLAP
or any agency of the U.S. Government.
This report may not be reproduced except in its entirety.

Los Angeles Unified School District
Facilities Services Division Laboratory
1449 S. San Pedro St.
Los Angeles, CA 90015
(213)745-1138

Asbestos Bulk Sample Analysis Laboratory Report

Laboratory Report

BASSETT ST ELEM

2323

NVLAP (TESTING) LAB# 101505-0
Method EPA/600/R-93/116(MOD) July 1993
Date Received: 07/17/2024

LAUSD Lab#	MIC	Date Analyzed	BUILDING/AREA SAMPLED	MATERIAL DESCRIPTION	CHR %	AM %	CROC %	TREM %	ACT %	ANTH %	TOTAL %	MATERIAL BACKGROUND
2024071487-C	AC	07/17/2024	006DAN : BLDG D GIRL'S R/R EAST	HOMOGENEOUS; NON-FRIABLE; LT.GRAY; MORTAR; CEMENTITIOUS	0	0	0	0	0	0	0	MINERAL FILLER
2024071487-D	AC	07/17/2024	006DAN : BLDG D GIRL'S R/R EAST	HOMOGENEOUS; NON-FRIABLE; OFF WHITE; CONCRETE; GRANULAR/ CEMENTITIOUS	0	0	0	0	0	0	0	MINERAL FILLER
2024071488-A	AC	07/17/2024	006DAN : BLDG D GIRL'S R/R SOUTH	HOMOGENEOUS; NON-FRIABLE; WHITE; CERAMIC TILES; SOLID	0	0	0	0	0	0	0	MINERAL FILLER
2024071488-B	AC	07/17/2024	006DAN : BLDG D GIRL'S R/R SOUTH	HOMOGENEOUS; NON-FRIABLE; GRAY; GROUT; CEMENTITIOUS	0	0	0	0	0	0	0	MINERAL FILLER
2024071488-C	AC	07/17/2024	006DAN : BLDG D GIRL'S R/R SOUTH	HOMOGENEOUS; NON-FRIABLE; LT.GRAY; MORTAR; CEMENTITIOUS	0	0	0	0	0	0	0	MINERAL FILLER
2024071488-D	AC	07/17/2024	006DAN : BLDG D GIRL'S R/R SOUTH	HOMOGENEOUS; NON-FRIABLE; OFF WHITE; CONCRETE; GRANULAR/ CEMENTITIOUS	0	0	0	0	0	0	0	MINERAL FILLER
2024071489-A	AC	07/17/2024	006DAN : BLDG D BOY'S R/R S/E	HOMOGENEOUS; NON-FRIABLE; WHITE; CERAMIC TILES; SOLID	0	0	0	0	0	0	0	MINERAL FILLER

Lab Supervisor Signature and Date _____ 7 / 18 / 24

Signature of Analyst _____

Note: 0%: No Asbestos Detected, <1%: Asbestos Detected Above 0% and Below or Equal to 1%
NA: Not Applicable. ""Quantification done by optical estimate"" 1 - 5 % considered non-quantifiable.
This report relates to only the material tested. An asterisk '*' indicates preliminary results.
The laboratory is not responsible for samples and data collected by personnel who are not part of the laboratory.

This report is not used by LAUSD to claim product endorsement by NVLAP
or any agency of the U.S. Government.
This report may not be reproduced except in its entirety.

Los Angeles Unified School District
Facilities Services Division Laboratory
1449 S. San Pedro St.
Los Angeles, CA 90015
(213)745-1138

Asbestos Bulk Sample Analysis Laboratory Report

Laboratory Report

BASSETT ST ELEM

2323

NVLAP (TESTING) LAB# 101505-0
Method EPA/600/R-93/116(MOD) July 1993
Date Received: 07/17/2024

LAUSD Lab#	MIC	Date Analyzed	BUILDING/AREA SAMPLED	MATERIAL DESCRIPTION	CHR %	AM %	CROC %	TREM %	ACT %	ANTH %	TOTAL %	MATERIAL BACKGROUND
2024071489-B	AC	07/17/2024	006DAN : BLDG D BOY'S R/R S/E	HOMOGENEOUS; NON-FRIABLE; GRAY; GROUT; CEMENTITIOUS	0	0	0	0	0	0	0	MINERAL FILLER
2024071489-C	AC	07/17/2024	006DAN : BLDG D BOY'S R/R S/E	HOMOGENEOUS; NON-FRIABLE; LT.GRAY; MORTAR; CEMENTITIOUS	0	0	0	0	0	0	0	MINERAL FILLER
2024071489-D	AC	07/17/2024	006DAN : BLDG D BOY'S R/R S/E	HOMOGENEOUS; NON-FRIABLE; OFF WHITE; CONCRETE; GRANULAR/ CEMENTITIOUS	0	0	0	0	0	0	0	MINERAL FILLER
2024071490	AC	07/17/2024	006DAN : BLDG D EXTERIOR WALL: BEHIND STUCCO WEST	HOMOGENEOUS; NON-FRIABLE; BLACK; BARRIER PAPER; FELT/ TAR	0	0	0	0	0	0	0	90% CELLULOSE TAR
2024071491	AC	07/17/2024	006DAN : BLDG D EXTERIOR WALL: BEHIND STUCCO SOUTH	HOMOGENEOUS; NON-FRIABLE; BLACK; BARRIER PAPER; FELT/ TAR	0	0	0	0	0	0	0	90% CELLULOSE TAR
2024071492	AC	07/17/2024	006DAN : BLDG D EXTERIOR WALL: BEHIND STUCCO EAST	HOMOGENEOUS; NON-FRIABLE; BLACK; BARRIER PAPER; FELT/ TAR	0	0	0	0	0	0	0	90% CELLULOSE TAR

Lab Supervisor Signature and Date _____ 7 / 18 / 24

Signature of Analyst _____

Note: 0%: No Asbestos Detected; <1%: Asbestos Detected Above 0% and Below or Equal to 1%
NA: Not Applicable. ""Quantification done by optical estimate"" 1 - 5 % considered non-quantifiable.
This report relates to only the material tested. An asterisk '*' indicates preliminary results.
The laboratory is not responsible for samples and data collected by personnel who are not part of the laboratory.

This report is not used by LAUSD to claim product endorsement by NVLAP
or any agency of the U.S. Government.
This report may not be reproduced except in its entirety.

LOS ANGELES UNIFIED SCHOOL DISTRICT
FACILITIES SERVICES DIVISION
CHAIN-OF-CUSTODY FOR BULK ANALYSIS

54272

SITE NAME: Bassett Elementary School CODE: 2323 PROJECT DESC ADA Improvements COLIN #: 10373370

SAMPLED BY: Eric Bracamontes / Ahmad Abdallah DATE SAMPLED: 07-11-2024 DEPT. / CONSULTANT: CNS Environmental, Inc. TEL: (714) 525-5115

Fill in all information legibly and precisely. Original must be submitted with the samples. Make a copy before submitting samples. Results and a copy of the Chain of Custody (COC) with sample numbers will be submitted to FETU when analysis is completed. ***USE BLACK/BLUE INK ONLY. DO NOT USE WHITE OUT! ALL RUSH ANALYSIS AND POINT COUNT REQUESTS MUST BE APPROVED BY FETU SUPERVISORS.***

LAB NUMBER	SAMPLE NUMBER	BUILDING NUMBER	BUILDING NAME	ROOM NUMBER AND/OR NAME	LOCATION IN ROOM	MATERIAL TYPE (DESCRIBE)	FRIABLE (YES or NO)
2407-1493	52	007DAN	Kindergarten Bldg	Tot's R/R	N/E	Green / Lt. Green Ceramic Floor Tile w/ Grout (over concrete)	No
2407-1494	53	↓	↓	↓	S/E	↓	↓
2407-1495	54	↓	↓	↓	N/W	↓	↓
2407-1496	55	↓	↓	Rm. 23	South	12x12 Lt. Blue Floor Tile w/ Mastic (over concrete)	No
2407-1497	56	↓	↓	↓	N/W	↓	↓
2407-1498	57	↓	↓	Rm. 22	N/E	↓	↓
2407-1499	58	↓	↓	Exterior Wall behind stucco	North	Vapor Barrier Paper - walls	No
2407-1500	59 (E6)	↓	↓	↓	S/E	↓	↓
2407-1501	60	↓	↓	↓	South	↓	↓
2407-1502	61	001DAN	Admin Bldg	↓	North	↓	No
2407-1503	62	↓	↓	↓	East	↓	↓
2407-1504	63	↓	↓	↓	West	↓	↓

	NAME (PRINT & SIGN)	DEPT./AREA/CONSULTANT	# OF SAMPLES	DATE	TIME
Relinquished By:	E. Bracamontes [signature]	CNS Env.	12	07-16-2024	8:30p
Received By:	Ahmad Abdallah / [signature]	CNS	12	07-17-24	12:30 PM
Relinquished By:	Ahmad Abdallah / [signature]	CNS	12	07-17-24	12:45 PM
Received By:	VY PHAN [signature]	P&D Lab	12	07/17/24	12:45 pm

Maximo Work Order Number: 38050584 Project Type: ☐ Maintenance (MA) ☐ Deferred Maintenance ☐ Bond (specify: K,R,Y,Q) ☐ Other:

FETU USE ONLY

FETU REVIEWED BY: [signature] RUSH? ☒ Yes ☐ No APPROVAL: [signature]

FETU REVIEW DATE: 7/17/24 POINT COUNT? ☐ Yes ☐ No PT. CT. RUSH? ☐ Yes ☐ No APPROVAL:

Los Angeles Unified School District
Facilities Services Division Laboratory
1449 S. San Pedro St.
Los Angeles, CA 90015
(213)745-1138

Asbestos Bulk Sample Analysis Laboratory Report

Laboratory Report

BASSETT ST ELEM

2323

NVLAP (TESTING) LAB# 101505-0
Method EPA/600/R-93/116(MOD) July 1993
Date Received: 07/17/2024

LAUSD Lab#	MIC	Date Analyzed	BUILDING/AREA SAMPLED	MATERIAL DESCRIPTION	CHR %	AM %	CROC %	TREM %	ACT %	ANTH %	TOTAL %	MATERIAL BACKGROUND
2024071493-A	VP	07/18/2024	007DAN : KINDERGARTEN BLDG TOT'S R/R N/E	HOMOGENEOUS; NON-FRIABLE; GREEN; CERAMIC TILES; SOLID	0	0	0	0	0	0	0	MINERAL FILLER
2024071493-B	VP	07/18/2024	007DAN : KINDERGARTEN BLDG TOT'S R/R N/E	HOMOGENEOUS; NON-FRIABLE; GRAY; GROUT; GRANULAR/ CHALKY	0	0	0	0	0	0	0	MINERAL FILLER
2024071493-C	VP	07/18/2024	007DAN : KINDERGARTEN BLDG TOT'S R/R N/E	HOMOGENEOUS; NON-FRIABLE; GRAY; MORTAR; GRANULAR/ CHALKY	0	0	0	0	0	0	0	MINERAL FILLER
2024071493-D	VP	07/18/2024	007DAN : KINDERGARTEN BLDG TOT'S R/R N/E	HOMOGENEOUS; NON-FRIABLE; GRAY; CONCRETE; CEMENTITIOUS	0	0	0	0	0	0	0	MINERAL FILLER
2024071494-A	VP	07/18/2024	007DAN : KINDERGARTEN BLDG TOT'S R/R S/E	HOMOGENEOUS; NON-FRIABLE; GREEN; CERAMIC TILES; SOLID	0	0	0	0	0	0	0	MINERAL FILLER
2024071494-B	VP	07/18/2024	007DAN : KINDERGARTEN BLDG TOT'S R/R S/E	HOMOGENEOUS; NON-FRIABLE; GRAY; GROUT; GRANULAR/ CHALKY	0	0	0	0	0	0	0	MINERAL FILLER
2024071494-C	VP	07/18/2024	007DAN : KINDERGARTEN BLDG TOT'S R/R S/E	HOMOGENEOUS; NON-FRIABLE; GRAY; MORTAR; GRANULAR/ CHALKY	0	0	0	0	0	0	0	MINERAL FILLER

Lab Supervisor Signature and Date _____ 7 / 18 / 24

Signature of Analyst _____

Note: 0%: No Asbestos Detected; <1%: Asbestos Detected Above 0% and Below or Equal to 1%
NA: Not Applicable. ""Quantification done by optical estimate"" 1 - 5 % considered non-quantifiable.
This report relates to only the material tested. An asterisk '*' indicates preliminary results.
The laboratory is not responsible for samples and data collected by personnel who are not part of the laboratory.

This report is not used by LAUSD to claim product endorsement by NVLAP
or any agency of the U.S. Government.
This report may not be reproduced except in its entirety.

Los Angeles Unified School District
Facilities Services Division Laboratory
1449 S. San Pedro St.
Los Angeles, CA 90015
(213)745-1138

Asbestos Bulk Sample Analysis Laboratory Report

Laboratory Report

BASSETT ST ELEM

2323

NVLAP (TESTING) LAB# 101505-0
Method EPA/600/R-93/116(MOD) July 1993
Date Received: 07/17/2024

LAUSD Lab#	MIC	Date Analyzed	BUILDING/AREA SAMPLED	MATERIAL DESCRIPTION	CHR %	AM %	CROC %	TREM %	ACT %	ANTH %	TOTAL %	MATERIAL BACKGROUND
2024071494-D	VP	07/18/2024	007DAN : KINDERGARTEN BLDG TOT'S R/R S/E	HOMOGENEOUS; NON-FRIABLE; GRAY; CONCRETE; CEMENTITIOUS	0	0	0	0	0	0	0	MINERAL FILLER
2024071495-A	VP	07/18/2024	007DAN : KINDERGARTEN BLDG TOT'S R/R N/W	HOMOGENEOUS; NON-FRIABLE; GREEN; CERAMIC TILES; SOLID	0	0	0	0	0	0	0	MINERAL FILLER
2024071495-B	VP	07/18/2024	007DAN : KINDERGARTEN BLDG TOT'S R/R N/W	HOMOGENEOUS; NON-FRIABLE; GRAY; GROUT; GRANULAR/ CHALKY	0	0	0	0	0	0	0	MINERAL FILLER
2024071495-C	VP	07/18/2024	007DAN : KINDERGARTEN BLDG TOT'S R/R N/W	HOMOGENEOUS; NON-FRIABLE; GRAY; MORTAR; GRANULAR/ CHALKY	0	0	0	0	0	0	0	MINERAL FILLER
2024071495-D	VP	07/18/2024	007DAN : KINDERGARTEN BLDG TOT'S R/R N/W	HOMOGENEOUS; NON-FRIABLE; GRAY; CONCRETE; CEMENTITIOUS	0	0	0	0	0	0	0	MINERAL FILLER
2024071496-A	VP	07/18/2024	007DAN : KINDERGARTEN BLDG RM. 23 SOUTH	HOMOGENEOUS; NON-FRIABLE; LT. BLUE; FLOOR TILE; VINYL	0	0	0	0	0	0	0	BINDER, MINERAL FILLER
2024071496-B	VP	07/18/2024	007DAN : KINDERGARTEN BLDG RM. 23 SOUTH	HOMOGENEOUS; NON-FRIABLE; BLACK; MASTIC; TAR	3	0	0	0	0	0	3	TAR

Lab Supervisor Signature and Date _____ 7 / 18 / 24

Signature of Analyst _____

Note: 0%: No Asbestos Detected; <1%: Asbestos Detected Above 0% and Below or Equal to 1%
NA: Not Applicable. ""Quantification done by optical estimate"" 1 - 5 % considered non-quantifiable.
This report relates to only the material tested. An asterisk '*' indicates preliminary results.
The laboratory is not responsible for samples and data collected by personnel who are not part of the laboratory.

This report is not used by LAUSD to claim product endorsement by NVLAP
or any agency of the U.S. Government.
This report may not be reproduced except in its entirety.

Los Angeles Unified School District
Facilities Services Division Laboratory
1449 S. San Pedro St.
Los Angeles, CA 90015
(213)745-1138

Asbestos Bulk Sample Analysis Laboratory Report

Laboratory Report

BASSETT ST ELEM

2323

NVLAP (TESTING) LAB# 101505-0
Method EPA/600/R-93/116(MOD) July 1993
Date Received: 07/17/2024

LAUSD Lab#	MIC	Date Analyzed	BUILDING/AREA SAMPLED	MATERIAL DESCRIPTION	CHR %	AM %	CROC %	TREM %	ACT %	ANTH %	TOTAL %	MATERIAL BACKGROUND
2024071496-C	VP	07/18/2024	007DAN : KINDERGARTEN BLDG RM. 23 SOUTH	HOMOGENEOUS; NON-FRIABLE; WHITE; LEVELING MATERIAL; CHALKY	0	0	0	0	0	0	0	MINERAL FILLER
2024071497-A	VP	07/18/2024	007DAN : KINDERGARTEN BLDG RM. 23 N/W	HOMOGENEOUS; NON-FRIABLE; LT. BLUE; FLOOR TILE; VINYL	0	0	0	0	0	0	0	BINDER, MINERAL FILLER
2024071497-B	VP	07/18/2024	007DAN : KINDERGARTEN BLDG RM. 23 N/W	HOMOGENEOUS; NON-FRIABLE; BLACK; MASTIC; TAR	3	0	0	0	0	0	3	TAR
2024071498-A	VP	07/18/2024	007DAN : KINDERGARTEN BLDG RM. 22 N/E	HOMOGENEOUS; NON-FRIABLE; LT. BLUE; FLOOR TILE; VINYL	0	0	0	0	0	0	0	BINDER, MINERAL FILLER
2024071498-B	VP	07/18/2024	007DAN : KINDERGARTEN BLDG RM. 22 N/E	HOMOGENEOUS; NON-FRIABLE; BLACK; MASTIC; TAR	3	0	0	0	0	0	3	TAR
2024071499	VP	07/18/2024	007DAN : KINDERGARTEN BLDG EXTERIRO WALL: BEHIND STUCCO NORTH	HOMOGENEOUS; NON-FRIABLE; BLACK; BARRIER PAPER; FELT/ TAR	0	0	0	0	0	0	0	90% CELLULOSE TAR
2024071500	VP	07/18/2024	007DAN : KINDERGARTEN BLDG EXTERIRO WALL: BEHIND STUCCO S/E	HOMOGENEOUS; NON-FRIABLE; BLACK; BARRIER PAPER; FELT/ TAR	0	0	0	0	0	0	0	90% CELLULOSE TAR

Lab Supervisor Signature and Date _____ 7 / 18 / 24

Signature of Analyst _____

Note: 0%: No Asbestos Detected, <1%: Asbestos Detected Above 0% and Below or Equal to 1%
NA: Not Applicable. ""Quantification done by optical estimate"" 1 - 5 % considered non-quantifiable.
This report relates to only the material tested. An asterisk '*' indicates preliminary results.
The laboratory is not responsible for samples and data collected by personnel who are not part of the laboratory.

This report is not used by LAUSD to claim product endorsement by NVLAP
or any agency of the U.S. Government.
This report may not be reproduced except in its entirety.

Los Angeles Unified School District
Facilities Services Division Laboratory
1449 S. San Pedro St.
Los Angeles, CA 90015
(213)745-1138

Asbestos Bulk Sample Analysis Laboratory Report

Laboratory Report

BASSETT ST ELEM

2323

NVLAP (TESTING) LAB# 101505-0
Method EPA/600/R-93/116(MOD) July 1993
Date Received: 07/17/2024

LAUSD Lab#	MIC	Date Analyzed	BUILDING/AREA SAMPLED	MATERIAL DESCRIPTION	CHR %	AM %	CROC %	TREM %	ACT %	ANTH %	TOTAL %	MATERIAL BACKGROUND
2024071501	VP	07/18/2024	007DAN : KINDERGARTEN BLDG EXTERIRO WALL: BEHIND STUCCO SOUTH	HOMOGENEOUS; NON-FRIABLE; BLACK; BARRIER PAPER; FELT/ TAR	0	0	0	0	0	0	0	90% CELLULOSE TAR
2024071502	VP	07/18/2024	001DAN : ADMIN BLDG EXTERIRO WALL: BEHIND STUCCO NORTH	HOMOGENEOUS; NON-FRIABLE; BLACK; BARRIER PAPER; FELT/ TAR	0	0	0	0	0	0	0	90% CELLULOSE TAR
2024071503	VP	07/18/2024	001DAN : ADMIN BLDG EXTERIRO WALL: BEHIND STUCCO EAST	HOMOGENEOUS; NON-FRIABLE; BLACK; BARRIER PAPER; FELT/ TAR	0	0	0	0	0	0	0	90% CELLULOSE TAR
2024071504	VP	07/18/2024	001DAN : ADMIN BLDG EXTERIRO WALL: BEHIND STUCCO WEST	HOMOGENEOUS; NON-FRIABLE; BLACK; BARRIER PAPER; FELT/ TAR	0	0	0	0	0	0	0	90% CELLULOSE TAR

Lab Supervisor Signature and Date _____ 7 / 18 / 24

Signature of Analyst _____

Note: 0%: No Asbestos Detected; <1%: Asbestos Detected Above 0% and Below or Equal to 1%
NA: Not Applicable. ""Quantification done by optical estimate"" 1 - 5 % considered non-quantifiable.
This report relates to only the material tested. An asterisk '*' indicates preliminary results.
The laboratory is not responsible for samples and data collected by personnel who are not part of the laboratory.

This report is not used by LAUSD to claim product endorsement by NVLAP
or any agency of the U.S. Government.
This report may not be reproduced except in its entirety.

LOS ANGELES UNIFIED SCHOOL DISTRICT
FACILITIES SERVICES DIVISION
CHAIN-OF-CUSTODY FOR BULK ANALYSIS

54273

SITE NAME: Bassett Elementary School CODE: 2323 PROJECT DESC ADA Improvements COLIN #: 10373370

SAMPLED BY: Eric Bracamontes / Ahmad Abdollahian DATE SAMPLED: 07-11-2024 DEPT. / CONSULTANT: CNS Environmental, Inc. TEL: (714) 525-5115

Fill in all information legibly and precisely. Original must be submitted with the samples. Make a copy before submitting samples. Results and a copy of the Chain of Custody (COC) with sample numbers will be submitted to FETU when analysis is completed. ***USE BLACK/BLUE INK ONLY. DO NOT USE WHITE OUT! ALL RUSH ANALYSIS AND POINT COUNT REQUESTS MUST BE APPROVED BY FETU SUPERVISORS.***

LAB NUMBER	SAMPLE NUMBER	BUILDING NUMBER	BUILDING NAME	ROOM NUMBER AND/OR NAME	LOCATION IN ROOM	MATERIAL TYPE (DESCRIBE)	FRIABLE (YES or NO)
2407-1505	64	X3495Y	2/3 Unit Relocatable	Rm. 19	East	12x12 White Floor Tile w/ Adhesive (CORE)	No
2407-1506	65	↓	↓	↓	N/W	↓	↓
2407-1507	66	↓	↓	Rm. 18	S/W	↓	↓
2407-1508	67	↓	↓	Rm. 19	N/W	4" Brown Cove Base w/ Adhesive	No
2407-1509	68	↓	↓	Rm. 18	S/W	↓	↓
2407-1510	69	↓	↓	↓	West	↓	↓
2407-1511	70	↓	↓	Rm. 19	West	Fiberboard Wall Panel	No
2407-1512	71	↓	↓	↓	N/W	↓	↓
2407-1513	72	↓	↓	Rm. 18	S/W	↓	↓

	NAME (PRINT & SIGN)	DEPT./AREA/CONSULTANT	# OF SAMPLES	DATE	TIME
Relinquished By:	E. Bracamontes	CNS Env.	9	7/17/24	12:30 PM
Received By:	Ahmad Abdollahian / AA	CNS Env	9 AA	7/17/24	12:30 PM
Relinquished By:	Ahmad Abdollahian / AA	CNS Env.	9 AA	7/17/24	12:45 PM
Received By:	VY PHAN	FSD Lab	9	07/17/24	12:45 pm

Maximo Work Order Number: 38050584 Project Type: ☒ Maintenance (MA) ☐ Deferred Maintenance ☐ Bond (specify: K,R,Y,Q) ☐ Other:

FETU USE ONLY

FETU REVIEWED BY: FETU REVIEW DATE: 7/17/24

RUSH? ☒ Yes ☐ No APPROVAL:

POINT COUNT? ☐ Yes ☐ No PT. CT. RUSH? ☐ Yes ☐ No APPROVAL:

Los Angeles Unified School District
Facilities Services Division Laboratory
1449 S. San Pedro St.
Los Angeles, CA 90015
(213)745-1138

Asbestos Bulk Sample Analysis Laboratory Report

Laboratory Report

BASSETT ST ELEM

2323

NVLAP (TESTING) LAB# 101505-0
Method EPA/600/R-93/116(MOD) July 1993
Date Received: 07/17/2024

LAUSD Lab#	MIC	Date Analyzed	BUILDING/AREA SAMPLED	MATERIAL DESCRIPTION	CHR %	AM %	CROC %	TREM %	ACT %	ANTH %	TOTAL %	MATERIAL BACKGROUND
2024071505-A	VP	07/17/2024	X3495Y : 2/3 UNIT RELOCATABLE RM. 19 EAST	HOMOGENEOUS; NON-FRIABLE; WHITE; FLOOR TILE; VINYL	0	0	0	0	0	0	0	BINDER, CARBONATES
2024071505-B	VP	07/17/2024	X3495Y : 2/3 UNIT RELOCATABLE RM. 19 EAST	HOMOGENEOUS; NON-FRIABLE; BLACK; MASTIC; TAR	0	0	0	0	0	0	0	TAR
2024071505-C	VP	07/17/2024	X3495Y : 2/3 UNIT RELOCATABLE RM. 19 EAST	HOMOGENEOUS; NON-FRIABLE; LITE BROWN; WOOD; FIBROUS	0	0	0	0	0	0	0	100% CELLULOSE
2024071506-A	VP	07/17/2024	X3495Y : 2/3 UNIT RELOCATABLE RM. 19 N/W	HOMOGENEOUS; NON-FRIABLE; WHITE; FLOOR TILE; VINYL	0	0	0	0	0	0	0	BINDER, CARBONATES
2024071506-B	VP	07/17/2024	X3495Y : 2/3 UNIT RELOCATABLE RM. 19 N/W	HOMOGENEOUS; NON-FRIABLE; BLACK; MASTIC; TAR	0	0	0	0	0	0	0	TAR
2024071506-C	VP	07/17/2024	X3495Y : 2/3 UNIT RELOCATABLE RM. 19 N/W	HOMOGENEOUS; NON-FRIABLE; LITE BROWN; WOOD; FIBROUS	0	0	0	0	0	0	0	100% CELLULOSE
2024071507-A	VP	07/17/2024	X3495Y : 2/3 UNIT RELOCATABLE RM. 18 S/W	HOMOGENEOUS; NON-FRIABLE; WHITE; FLOOR TILE; VINYL	0	0	0	0	0	0	0	BINDER, CARBONATES

Lab Supervisor Signature and Date _____ 7 / 18 / 24

Signature of Analyst _____

Note: 0%: No Asbestos Detected; <1%: Asbestos Detected Above 0% and Below or Equal to 1%
NA: Not Applicable "*Quantification done by optical estimate"* 1 - 5 % considered non-quantifiable.
This report relates to only the material tested. An asterisk '*' indicates preliminary results.
The laboratory is not responsible for samples and data collected by personnel who are not part of the laboratory.

This report is not used by LAUSD to claim product endorsement by NVLAP
or any agency of the U.S. Government.
This report may not be reproduced except in its entirety.

Los Angeles Unified School District
Facilities Services Division Laboratory
1449 S. San Pedro St.
Los Angeles, CA 90015
(213)745-1138

Asbestos Bulk Sample Analysis Laboratory Report

Laboratory Report

BASSETT ST ELEM

2323

NVLAP (TESTING) LAB# 101505-0
Method EPA/600/R-93/116(MOD) July 1993
Date Received: 07/17/2024

LAUSD Lab#	MIC	Date Analyzed	BUILDING/AREA SAMPLED	MATERIAL DESCRIPTION	CHR %	AM %	CROC %	TREM %	ACT %	ANTH %	TOTAL %	MATERIAL BACKGROUND
2024071507-B	VP	07/17/2024	X3495Y : 2/3 UNIT RELOCATABLE RM. 18 S/W	HOMOGENEOUS; NON-FRIABLE; BLACK; MASTIC; TAR	0	0	0	0	0	0	0	TAR
2024071507-C	VP	07/17/2024	X3495Y : 2/3 UNIT RELOCATABLE RM. 18 S/W	HOMOGENEOUS; NON-FRIABLE; LITE BROWN; WOOD; FIBROUS	0	0	0	0	0	0	0	100% CELLULOSE
2024071508-A	VP	07/17/2024	X3495Y : 2/3 UNIT RELOCATABLE RM. 19 N/W	HOMOGENEOUS; NON-FRIABLE; BROWN; COVE BASE; RUBBER-LIKE	0	0	0	0	0	0	0	BINDER, MINERAL FILLER
2024071508-B	VP	07/17/2024	X3495Y : 2/3 UNIT RELOCATABLE RM. 19 N/W	HOMOGENEOUS; NON-FRIABLE; YELLOW; ADHESIVE; RESIN-LIKE	0	0	0	0	0	0	0	ADHESIVE
2024071508-C	VP	07/17/2024	X3495Y : 2/3 UNIT RELOCATABLE RM. 19 N/W	HOMOGENEOUS; NON-FRIABLE; WHITE; WALL COVERING; COATED MATERIAL	0	0	0	0	0	0	0	10% SYNTHETIC BINDER
2024071508-D	VP	07/17/2024	X3495Y : 2/3 UNIT RELOCATABLE RM. 19 N/W	HOMOGENEOUS; NON-FRIABLE; CLEAR; ADHESIVE; GLUE	0	0	0	0	0	0	0	ADHESIVE
2024071508-E	VP	07/17/2024	X3495Y : 2/3 UNIT RELOCATABLE RM. 19 N/W	HOMOGENEOUS; NON-FRIABLE; LITE BROWN; FIBERBOARD; FIBROUS	0	0	0	0	0	0	0	100% CELLULOSE

Lab Supervisor Signature and Date _____ 7 / 18 / 24

Signature of Analyst _____

Note: 0%: No Asbestos Detected; <1%: Asbestos Detected Above 0% and Below or Equal to 1%
NA: Not Applicable. **Quantification done by optical estimate** 1 - 5 % considered non-quantifiable.
This report relates to only the material tested. An asterisk '*' indicates preliminary results.
The laboratory is not responsible for samples and data collected by personnel who are not part of the laboratory.

This report is not used by LAUSD to claim product endorsement by NVLAP
or any agency of the U.S. Government.
This report may not be reproduced except in its entirety.

Los Angeles Unified School District
Facilities Services Division Laboratory
1449 S. San Pedro St.
Los Angeles, CA 90015
(213)745-1138

Asbestos Bulk Sample Analysis Laboratory Report

Laboratory Report

BASSETT ST ELEM

2323

NVLAP (TESTING) LAB# 101505-0
Method EPA/600/R-93/116(MOD) July 1993
Date Received: 07/17/2024

LAUSD Lab#	MIC	Date Analyzed	BUILDING/AREA SAMPLED	MATERIAL DESCRIPTION	CHR %	AM %	CROC %	TREM %	ACT %	ANTH %	TOTAL %	MATERIAL BACKGROUND
2024071509-A	VP	07/17/2024	X3495Y : 2/3 UNIT RELOCATABLE RM. 18 S/W	HOMOGENEOUS; NON-FRIABLE; BROWN; COVE BASE; RUBBER-LIKE	0	0	0	0	0	0	0	BINDER, MINERAL FILLER
2024071509-B	VP	07/17/2024	X3495Y : 2/3 UNIT RELOCATABLE RM. 18 S/W	HOMOGENEOUS; NON-FRIABLE; YELLOW; ADHESIVE; RESIN-LIKE	0	0	0	0	0	0	0	ADHESIVE
2024071509-C	VP	07/17/2024	X3495Y : 2/3 UNIT RELOCATABLE RM. 18 S/W	HOMOGENEOUS; NON-FRIABLE; WHITE; WALL COVERING; COATED MATERIAL	0	0	0	0	0	0	0	10% SYNTHETIC BINDER
2024071509-D	VP	07/17/2024	X3495Y : 2/3 UNIT RELOCATABLE RM. 18 S/W	HOMOGENEOUS; NON-FRIABLE; CLEAR; ADHESIVE; GLUE	0	0	0	0	0	0	0	ADHESIVE
2024071509-E	VP	07/17/2024	X3495Y : 2/3 UNIT RELOCATABLE RM. 18 S/W	HOMOGENEOUS; NON-FRIABLE; LITE BROWN; FIBERBOARD; FIBROUS	0	0	0	0	0	0	0	100% CELLULOSE
2024071510-A	VP	07/17/2024	X3495Y : 2/3 UNIT RELOCATABLE RM. 18 WEST	HOMOGENEOUS; NON-FRIABLE; BROWN; COVE BASE; RUBBER-LIKE	0	0	0	0	0	0	0	BINDER, MINERAL FILLER
2024071510-B	VP	07/17/2024	X3495Y : 2/3 UNIT RELOCATABLE RM. 18 WEST	HOMOGENEOUS; NON-FRIABLE; YELLOW; ADHESIVE; RESIN-LIKE	0	0	0	0	0	0	0	ADHESIVE

Lab Supervisor Signature and Date _____ 7/18/24

Signature of Analyst _____

Note: 0%: No Asbestos Detected; <1%: Asbestos Detected Above 0% and Below or Equal to 1%
NA: Not Applicable. ""Quantification done by optical estimate"" 1 - 5 % considered non-quantifiable.
This report relates to only the material tested. An asterisk '*' indicates preliminary results.
The laboratory is not responsible for samples and data collected by personnel who are not part of the laboratory.

This report is not used by LAUSD to claim product endorsement by NVLAP or any agency of the U.S. Government.
This report may not be reproduced except in its entirety.

Los Angeles Unified School District
Facilities Services Division Laboratory
1449 S. San Pedro St.
Los Angeles, CA 90015
(213)745-1138

Asbestos Bulk Sample Analysis Laboratory Report

Laboratory Report

BASSETT ST ELEM

2323

NVLAP (TESTING) LAB# 101505-0
Method EPA/600/R-93/116(MOD) July 1993
Date Received: 07/17/2024

LAUSD Lab#	MIC	Date Analyzed	BUILDING/AREA SAMPLED	MATERIAL DESCRIPTION	CHR %	AM %	CROC %	TREM %	ACT %	ANTH %	TOTAL %	MATERIAL BACKGROUND
2024071510-C	VP	07/17/2024	X3495Y : 2/3 UNIT RELOCATABLE RM. 18 WEST	HOMOGENEOUS; NON-FRIABLE; WHITE; WALL COVERING; COATED MATERIAL	0	0	0	0	0	0	0	10% SYNTHETIC BINDER
2024071510-D	VP	07/17/2024	X3495Y : 2/3 UNIT RELOCATABLE RM. 18 WEST	HOMOGENEOUS; NON-FRIABLE; CLEAR; ADHESIVE; GLUE	0	0	0	0	0	0	0	ADHESIVE
2024071510-E	VP	07/17/2024	X3495Y : 2/3 UNIT RELOCATABLE RM. 18 WEST	HOMOGENEOUS; NON-FRIABLE; LITE BROWN; FIBERBOARD; FIBROUS	0	0	0	0	0	0	0	100% CELLULOSE
2024071511-A	VP	07/17/2024	X3495Y : 2/3 UNIT RELOCATABLE RM. 19 WEST	HOMOGENEOUS; NON-FRIABLE; WHITE; WALL COVERING; COATED MATERIAL	0	0	0	0	0	0	0	10% SYNTHETIC BINDER
2024071511-B	VP	07/17/2024	X3495Y : 2/3 UNIT RELOCATABLE RM. 19 WEST	HOMOGENEOUS; NON-FRIABLE; CLEAR; ADHESIVE; GLUE	0	0	0	0	0	0	0	ADHESIVE
2024071511-C	VP	07/17/2024	X3495Y : 2/3 UNIT RELOCATABLE RM. 19 WEST	HOMOGENEOUS; NON-FRIABLE; LITE BROWN; FIBERBOARD; FIBROUS	0	0	0	0	0	0	0	100% CELLULOSE
2024071512-A	VP	07/17/2024	X3495Y : 2/3 UNIT RELOCATABLE RM. 19 N/W	HOMOGENEOUS; NON-FRIABLE; WHITE; WALL COVERING; COATED MATERIAL	0	0	0	0	0	0	0	10% SYNTHETIC BINDER

Lab Supervisor Signature and Date _____ 7 / 18 / 24

Signature of Analyst _____

Note: 0%: No Asbestos Detected; <1%: Asbestos Detected Above 0% and Below or Equal to 1%
NA: Not Applicable. ""Quantification done by optical estimate"" 1 - 5 % considered non-quantifiable.
This report relates to only the material tested. An asterisk '*' indicates preliminary results.
The laboratory is not responsible for samples and data collected by personnel who are not part of the laboratory.

This report is not used by LAUSD to claim product endorsement by NVLAP or any agency of the U.S. Government.
This report may not be reproduced except in its entirety.

Los Angeles Unified School District
Facilities Services Division Laboratory
1449 S. San Pedro St.
Los Angeles, CA 90015
(213)745-1138

Asbestos Bulk Sample Analysis Laboratory Report

Laboratory Report

BASSETT ST ELEM

2323

NVLAP (TESTING) LAB# 101505-0
Method EPA/600/R-93/116(MOD) July 1993
Date Received: 07/17/2024

LAUSD Lab#	MIC	Date Analyzed	BUILDING/AREA SAMPLED	MATERIAL DESCRIPTION	CHR %	AM %	CROC %	TREM %	ACT %	ANTH %	TOTAL %	MATERIAL BACKGROUND
2024071512-B	VP	07/17/2024	X3495Y : 2/3 UNIT RELOCATABLE RM. 19 N/W	HOMOGENEOUS; NON-FRIABLE; CLEAR; ADHESIVE; GLUE	0	0	0	0	0	0	0	ADHESIVE
2024071512-C	VP	07/17/2024	X3495Y : 2/3 UNIT RELOCATABLE RM. 19 N/W	HOMOGENEOUS; NON-FRIABLE; LITE BROWN; FIBERBOARD; FIBROUS	0	0	0	0	0	0	0	100% CELLULOSE
2024071513-A	VP	07/17/2024	X3495Y : 2/3 UNIT RELOCATABLE RM. 18 S/W	HOMOGENEOUS; NON-FRIABLE; WHITE; WALL COVERING; COATED MATERIAL	0	0	0	0	0	0	0	10% SYNTHETIC BINDER
2024071513-B	VP	07/17/2024	X3495Y : 2/3 UNIT RELOCATABLE RM. 18 S/W	HOMOGENEOUS; NON-FRIABLE; CLEAR; ADHESIVE; GLUE	0	0	0	0	0	0	0	ADHESIVE
2024071513-C	VP	07/17/2024	X3495Y : 2/3 UNIT RELOCATABLE RM. 18 S/W	HOMOGENEOUS; NON-FRIABLE; LITE BROWN; FIBERBOARD; FIBROUS	0	0	0	0	0	0	0	100% CELLULOSE

Lab Supervisor Signature and Date _____ 7 / 18 / 24

Signature of Analyst _____

Note: 0%: No Asbestos Detected; <1%: Asbestos Detected Above 0% and Below or Equal to 1%
NA: Not Applicable. ""Quantification done by optical estimate"" 1 - 5 % considered non-quantifiable.
This report relates to only the material tested. An asterisk '*' indicates preliminary results.
The laboratory is not responsible for samples and data collected by personnel who are not part of the laboratory.

This report is not used by LAUSD to claim product endorsement by NVLAP
or any agency of the U.S. Government.
This report may not be reproduced except in its entirety.

Bassett Elementary School (2323)
15756 Bassett St., Lake Balboa, CA 91406
EB ~~Vot~~ ADA Improvements Project

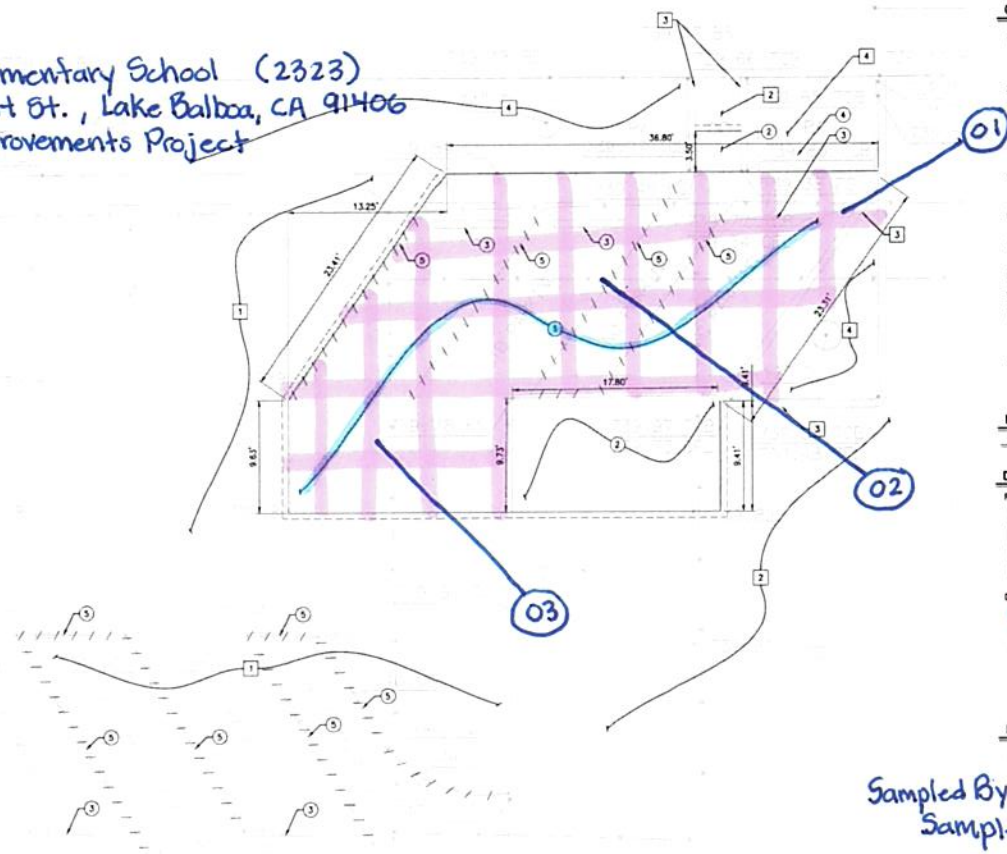

GENERAL DEMOLITION NOTES:

1. CONTRACTOR TO CLEAR PROJECT SITE AREA WITHIN THE CONFINES OF THE DEMOLITION LIMIT LINE. THE CONTRACTOR SHALL DEMOLISH AND REMOVE FROM THE SITE ALL EXISTING UTILITIES, STRUCTURES, PLANTERS, TREES, AND ALL OTHER SITE FEATURES, UNLESS OTHERWISE NOTED ON THE PLAN.
2. REMOVAL OF LANDSCAPING SHALL INCLUDE ROOTS AND ORGANIC MATERIALS.
3. THE CONTRACTOR SHALL BE RESPONSIBLE FOR OBTAINING ANY AND ALL PERMITS AND SHALL PAY ALL FEES NECESSARY FOR ENCROACHMENT, GRADING, DEMOLITION AND DISPOSAL OF SAID MATERIALS AS REQUIRED BY PRIVATE, LOCAL AND STATE JURISDICTIONS.
4. THE CONTRACTOR SHALL BE RESPONSIBLE FOR A SITE INSPECTION TO FULLY ACKNOWLEDGE THE EXTENT OF THE DEMOLITION WORK.
5. THE CONTRACTOR SHALL VERIFY AND LOCATE ALL EXISTING ABOVE AND UNDERGROUND UTILITIES. LOCATIONS SHOWN ON THE PLANS ARE APPROXIMATE AND ARE SHOWN FOR GENERAL INFORMATION ONLY.
6. DAMAGE TO ANY EXISTING UTILITIES AND SERVICES TO REMAIN SHALL BE THE RESPONSIBILITY OF THE CONTRACTOR. CONTRACTOR SHALL REPAIR AND/OR REPLACE IN KIND.
7. EROSION CONTROL MEASURES SHALL BE IMPLEMENTED TO PREVENT DEBRIS AND UNSUITABLE MATERIALS FROM ENTERING STORM DRAINS, SANITARY SEWERS AND STREETS.
8. DUST CONTROL SHALL BE IMPLEMENTED DURING DEMOLITION.
9. DEMOLITION IS LIMITED TO WITHIN DEMOLITION LIMIT LINE UNLESS NOTED OTHERWISE.
10. THE CONTRACTOR SHALL VERIFY THE LOCATION AND QUANTITY OF EXISTING SURFACE STRUCTURES AND SHALL BE SOLELY RESPONSIBLE FOR ANY UNIDENTIFIED UTILITIES, IMPROVEMENTS, TREES, ETC. TO BE DEMOLISHED AND REMOVED WITHIN THE DEMOLITION LIMIT LINE, INCLUDING APPURTENANT FOUNDATIONS OR SUPPORTS.
11. DEMOLITION CALLOUTS IN THIS SECTION ARE REPRESENTATIVE OF WHAT IS TO BE DONE, NOT AN ITEMIZED ACCOUNTING FOR EACH PIPE, CATCH BASIN, MANHOLE, VAULT, ETC. THAT IS TO BE DEMOLISHED, REMOVED AND DISPOSED OF.

LEGEND:

SAWCUT AND JOIN

DEMOLITION NOTES:

PROTECT-IN-PLACE

1. PROTECT-IN-PLACE EXISTING ASPHALT PAVEMENT.
2. PROTECT-IN-PLACE EXISTING CONCRETE PAVEMENT.
3. PROTECT-IN-PLACE EXISTING CURB.
4. PROTECT-IN-PLACE EXISTING LANDSCAPE.

DEMOLISH & REMOVE

1. DEMOLISH & REMOVE EXISTING ASPHALT PAVEMENT.
2. DEMOLISH & REMOVE EXISTING CONCRETE PAVEMENT.
3. DEMOLISH & REMOVE EXISTING WHEEL STOP.
4. DEMOLISH & REMOVE EXISTING STEEL SIGN POST AND CONCRETE FOOTING.
5. REMOVE EXISTING PARKING STRIPING. REFER TO ARCHITECTURAL SHEETS A1.70 & A1.71 FOR PARKING STRIPING DETAILS.

NOTES:

1. REFER TO ARCHITECTURAL SHEET A1.70 FOR ADDITIONAL INFORMATION.

Sampled By: CNS Eric Bracamontes
Sample Date: 07-12-2024

ARCHITECTUAL BARRIER LIST:
#30-LAASITE-134901

PARKING LOT DEMOLITION PLAN
SCALE: 1" = 5'

Sample Material:
- Asphalt Paving (CORE)
Sample #: 01-03
892 S.f

N
0 2.5' 5'
SCALE: 1"=5'

N

Grounds
(2323-G)
AREA "A"
North Parking Lot
(N/E area)

DIVISION OF THE STATE ARCHITECT

DSA APP # 03-XXXXXX

LOS ANGELES UNIFIED SCHOOL DISTRICT

ASSET MANAGEMENT
FACILITIES SERVICES DIVISION
333 S. BEAUDRY AVENUE, 23RD FLOOR
LOS ANGELES, CALIFORNIA 90017

PROJECT TITLE AND SCHOOL LOCATION

BASSETT STREET
ELEMENTARY SCHOOL
15756 BASSETT ST
LAKE BALBOA, CA 91406

VOLUNTARY BARRIER REMOVAL

COLIN NO:10371927

COMMISSIONED ARCHITECT

Swift Lee Office
543A S. Raymond Ave
Pasadena, CA 91105
T. 323.257.8200
www.swiftleeoffice.com

CONSULTANT

kpff
700 South Flower Street
Suite 2100
Los Angeles, CA 90017
O: 213.418.0201
www.kpff.com

STAMPS/SEALS

50% CD	12.18.23
100% CD PROGRESS SET	04.02.24
100% CD	06.03.24

SHEET TITLE

PARKING LOT
DEMOLITION PLAN

PROJECT NO.: PROJECT ARCH
DRAWN: CHECKED:
SHEET NUMBER

C1.10

DATE: SHEET OF

P:\2023\2023345 LAUSD Bassett ES - ADA Upgrades & CAD Drawings\2023345-C1-1100-CD-PV.dwg, Jun 03, 2024 - 10:05am

Grounds
(2323-G)
AREA "B"
(Patch #1)

Bassett Elementary School (2323)
15756 Bassett St., Lake Balboa, CA 91406
ADA Improvements Project
Sampled By: CNS Eric Bracamontes
Sample Date: 07-12-2024

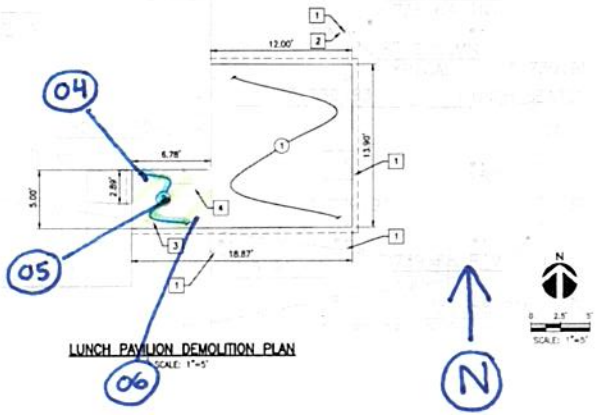

ARCHITECTURAL BARRIER LIST
#118-LTASNG-136290
#119-LATSNG-136291

LUNCH PAVILION DEMOLITION PLAN
SCALE: 1"=5'

GENERAL DEMOLITION NOTES:

1. CONTRACTOR TO CLEAR PROJECT SITE AREA WITHIN THE CONFINES OF THE DEMOLITION LIMIT LINE. THE CONTRACTOR SHALL DEMOLISH AND REMOVE FROM THE SITE ALL EXISTING UTILITIES, STRUCTURES, PLANTERS, TREES, AND ALL OTHER SITE FEATURES, UNLESS OTHERWISE NOTED ON THE PLAN.
2. REMOVAL OF LANDSCAPING SHALL INCLUDE ROOTS AND ORGANIC MATERIALS.
3. THE CONTRACTOR SHALL BE RESPONSIBLE FOR OBTAINING ANY AND ALL PERMITS AND SHALL PAY ALL FEES NECESSARY FOR ENCROACHMENT, GRADING, DEMOLITION AND DISPOSAL OF SAID MATERIALS AS REQUIRED BY PRIVATE, LOCAL AND STATE JURISDICTIONS.
4. THE CONTRACTOR SHALL BE RESPONSIBLE FOR A SITE INSPECTION TO FULLY ACKNOWLEDGE THE EXTENT OF THE DEMOLITION WORK.
5. THE CONTRACTOR SHALL VERIFY AND LOCATE ALL EXISTING ABOVE AND UNDERGROUND UTILITIES. LOCATIONS SHOWN ON THE PLANS ARE APPROXIMATE AND ARE SHOWN FOR GENERAL INFORMATION ONLY.
6. DAMAGE TO ANY EXISTING UTILITIES AND SERVICES TO REMAIN SHALL BE THE RESPONSIBILITY OF THE CONTRACTOR. CONTRACTOR SHALL REPAIR AND/OR REPLACE IN KIND.
7. EROSION CONTROL MEASURES SHALL BE IMPLEMENTED TO PREVENT DEBRIS AND UNSUITABLE MATERIALS FROM ENTERING STORM DRAINS, SANITARY SEWERS AND STREETS.
8. DUST CONTROL SHALL BE IMPLEMENTED DURING DEMOLITION.
9. DEMOLITION IS LIMITED TO WITHIN DEMOLITION LIMIT LINE UNLESS NOTED OTHERWISE.
10. THE CONTRACTOR SHALL VERIFY THE LOCATION AND QUANTITY OF EXISTING SURFACE STRUCTURES AND SHALL BE SOLELY RESPONSIBLE FOR ANY UNIDENTIFIED UTILITIES, IMPROVEMENTS, TREES, ETC. TO BE DEMOLISHED AND REMOVED WITHIN THE DEMOLITION LIMIT LINE, INCLUDING APPURTENANT FOUNDATIONS OR SUPPORTS.
11. DEMOLITION CALLOUTS IN THIS SECTION ARE REPRESENTATIVE OF WHAT IS TO BE DONE, NOT AN ITEMIZED ACCOUNTING FOR EACH PIPE, CATCH BASIN, MANHOLE, VAULT, ETC. THAT IS TO BE DEMOLISHED, REMOVED AND DISPOSED OF.

LEGEND:

SAWCUT AND JOIN

EXISTING FOUNDATION

DEMOLITION NOTES:

PROTECT-IN-PLACE OR PROTECT AND ADJUST

1. PROTECT-IN-PLACE EXISTING COLUMN PER DETAIL 8, SHEET C5.00.
2. PROTECT AND ADJUST EXISTING ROOF DRAIN PER DETAIL 1, SHEET C5.01.
3. PROTECT-IN-PLACE EXISTING STORM DRAIN LINE.
4. PROTECT-IN-PLACE EXISTING ELECTRICAL GROUND BOX. ADJUST TO GRADE.

DEMOLISH & REMOVE

1. DEMOLISH & REMOVE EXISTING CONCRETE PAVEMENT.
2. DEMOLISH & REMOVE EXISTING ASPHALT PAVEMENT.

NOTES

1. REFER TO ARCHITECTURAL SHEET A3.40 FOR ADDITIONAL INFORMATION.

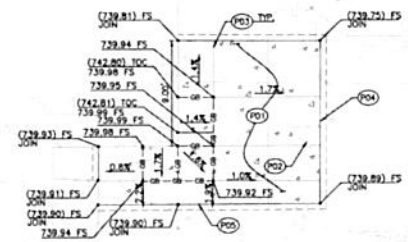

ARCHITECTURAL BARRIER LIST
#118-LTASNG-136290
#119-LATSNG-136291

LUNCH PAVILION GRADING & PAVING PLAN
SCALE: 1"=5'

PAVING CONSTRUCTION NOTES

- P01 CONCRETE WALK PER DETAIL 2, SHEET C5.00.
- P02 CONCRETE PAVEMENT REPLACEMENT AROUND EXISTING COLUMN PER DETAIL 8, SHEET C5.00.
- P03 CONTROL JOINT PER DETAIL 7, SHEET C5.01.
- P04 CONCRETE PAVEMENT CONNECTION TO EXISTING CONCRETE PAVEMENT PER DETAIL 5, SHEET C5.01.
- P05 CONCRETE PAVEMENT CONNECTION TO EXISTING ASPHALT PAVEMENT PER DETAIL 6, SHEET C5.01.

LEGEND

SAWCUT AND JOIN

CONCRETE PAVING
(REFER TO SHEET C5.00 FOR DETAILS)

EXISTING FOUNDATION

NOTE TO CONTRACTOR/CONSTRUCTION SURVEYOR:
CONSTRUCTION STAKING FOR IMPROVEMENTS SHOWN ON THESE PLANS SHALL BE PERFORMED BY A LICENSED LAND SURVEYOR. CONSTRUCTION STAKING SURVEYOR SHALL BE RESPONSIBLE FOR COORDINATION OF THESE PLANS WITH SOURCE DRAWINGS PREPARED BY ARCHITECT, LANDSCAPE ARCHITECT, STRUCTURAL ENGINEER, MEP CONSULTANT AND ANY OTHER DISCIPLINE PRIOR TO START OF STAKING AND CONSTRUCTION. ANY DISCREPANCIES THAT OCCUR SHALL BE BROUGHT TO THE ATTENTION OF THE ARCHITECT PRIOR TO THE START OF CONSTRUCTION SO THAT A CLARIFICATION CAN BE ISSUED.

NOTES

1. CONTRACTOR TO VERIFY LIMITS OF HARDSCAPE REPLACEMENT WITH EXISTING CONSTRUCTION JOINTS. CONTRACTOR TO NOTIFY ENGINEER IF DISCREPANCIES ARE FOUND.
2. REFER TO ARCHITECTURAL SHEET A3.41 FOR ADDITIONAL INFORMATION.

Sample Material:

- Asphalt Paving-Patch (CORE)
  Sample #: 04-06
  34 s.f

DIVISION OF THE STATE ARCHITECT

DSA APP # 03-XXXXXX

LOS ANGELES UNIFIED SCHOOL DISTRICT

ASSET MANAGEMENT
FACILITIES SERVICES DIVISION
333 S. BEAUDRY AVENUE, 23RD FLOOR
LOS ANGELES, CALIFORNIA 90017

PROJECT TITLE AND SCHOOL LOCATION

BASSETT STREET
ELEMENTARY SCHOOL
15756 BASSETT ST
LAKE BALBOA, CA 91406

VOLUNTARY BARRIER REMOVAL

COLIN NO: 10371927

COMMISSIONED ARCHITECT

Swift Lee Office
543A S. Raymond Ave
Pasadena, CA 91105
T. 323.257.8200
www.swiftleeoffice.com

CONSULTANT

kpff
700 South Flower Street
Suite 2100
Los Angeles, CA 90017
O: 213.418.0201
www.kpff.com

STAMPS/SEALS

50% CD	12.18.23
100% CD PROGRESS SET	04.02.24
100% CD	06.03.24

SHEET TITLE

LUNCH PAVILION DEMOLITION, GRADING AND PAVING PLAN

PROJECT NO.: | PROJECT MGR.:
DRAWN: | CHECKED:

SHEET NUMBER

C1.12

DATE: | SHEET OF:

P:\2023\2303545 LAUSD Bassett ES - ADA Upgrades & CAD Drawings\2303545-C1.12(G)-GP-PV.dwg, Jun 03, 2024 - 10:05am

Bassett Elementary School (2323)
15756 Bassett St., Lake Balboa, CA 91406
ADA Improvements Project
Sampled By: CNS Eric Bracamontes
Sample Date: 07-12-2024

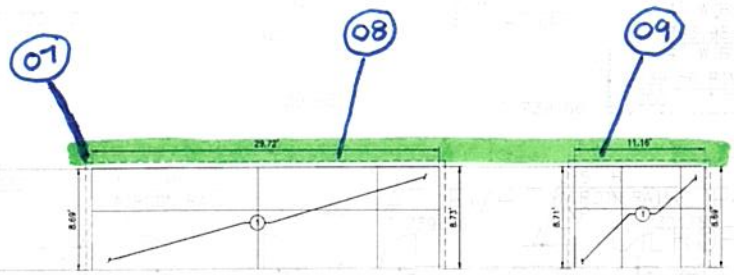

Grounds
(2323-G)
AREA "C"
(Kindergarden)
play area
South area

N

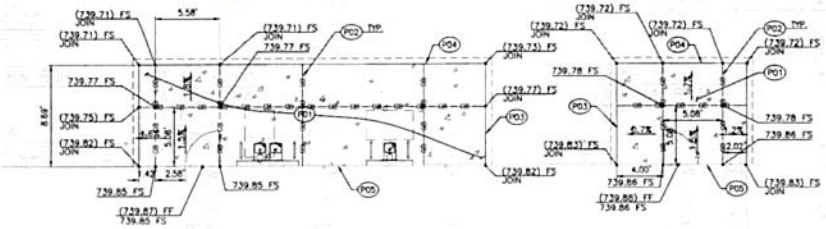

Sample Material:

- Asphalt Paving (CORE)
  Sample #: 07-09
  ≈ 180 S.f.

N

0 2.5' 5'
SCALE: 1"=5'

ARCHITECTUAL BARRIER LIST:
#97-LTASTEN-135632
#102-LTASTEN-135644

KINDERGARTEN BUILDING DEMOLITION PLAN
SCALE: 1"=5'

GENERAL DEMOLITION NOTES:

1. CONTRACTOR TO CLEAR PROJECT SITE AREA WITHIN THE CONFINES OF THE DEMOLITION LIMIT LINE. THE CONTRACTOR SHALL DEMOLISH AND REMOVE FROM THE SITE ALL EXISTING UTILITIES, STRUCTURES, PLANTERS, TREES, AND ALL OTHER SITE FEATURES, UNLESS OTHERWISE NOTED ON THE PLAN.
2. REMOVAL OF LANDSCAPING SHALL INCLUDE ROOTS AND ORGANIC MATERIALS.
3. THE CONTRACTOR SHALL BE RESPONSIBLE FOR OBTAINING ANY AND ALL PERMITS AND SHALL PAY ALL FEES NECESSARY FOR ENCROACHMENT, GRADING, DEMOLITION AND DISPOSAL OF SAID MATERIALS AS REQUIRED BY PRIVATE, LOCAL AND STATE JURISDICTIONS.
4. THE CONTRACTOR SHALL BE RESPONSIBLE FOR A SITE INSPECTION TO FULLY ACKNOWLEDGE THE EXTENT OF THE DEMOLITION WORK.
5. THE CONTRACTOR SHALL VERIFY AND LOCATE ALL EXISTING ABOVE AND UNDERGROUND UTILITIES. LOCATIONS SHOWN ON THE PLANS ARE APPROXIMATE AND ARE SHOWN FOR GENERAL INFORMATION ONLY.
6. DAMAGE TO ANY EXISTING UTILITIES AND SERVICES TO REMAIN SHALL BE THE RESPONSIBILITY OF THE CONTRACTOR. CONTRACTOR SHALL REPAIR AND/OR REPLACE IN KIND.
7. EROSION CONTROL MEASURES SHALL BE IMPLEMENTED TO PREVENT DEBRIS AND UNSUITABLE MATERIALS FROM ENTERING STORM DRAINS, SANITARY SEWERS AND STREETS.
8. DUST CONTROL SHALL BE IMPLEMENTED DURING DEMOLITION.
9. DEMOLITION IS LIMITED TO WITHIN DEMOLITION LIMIT LINE UNLESS NOTED OTHERWISE.
10. THE CONTRACTOR SHALL VERIFY THE LOCATION AND QUANTITY OF EXISTING SURFACE STRUCTURES AND SHALL BE SOLELY RESPONSIBLE FOR ANY UNIDENTIFIED UTILITIES, IMPROVEMENTS, TREES, ETC. TO BE DEMOLISHED AND REMOVED WITHIN THE DEMOLITION LIMIT LINE, INCLUDING APPURTENANT FOUNDATIONS OR SUPPORTS.
11. DEMOLITION CALLOUTS IN THIS SECTION ARE REPRESENTATIVE OF WHAT IS TO BE DONE, NOT AN ITEMIZED ACCOUNTING FOR EACH PIPE, CATCH BASIN, MANHOLE, VAULT, ETC. THAT IS TO BE DEMOLISHED, REMOVED AND DISPOSED OF.

LEGEND

SAWCUT AND JOIN

DEMOLITION NOTES:

DEMOLISH & REMOVE

(1) DEMOLISH & REMOVE EXISTING CONCRETE PAVEMENT.

NOTES

1. REFER TO ARCHITECTURAL SHEET A2.10 FOR ADDITIONAL INFORMATION.

ARCHITECTUAL BARRIER LIST:
#97-LTASTEN-135632
#102-LTASTEN-135644

KINDERGARTEN BUILDING GRADING & PAVING PLAN
SCALE: 1"=5'

PAVING CONSTRUCTION NOTES

(P01) CONCRETE WALK PER DETAIL 2, SHEET C5.00.

(P02) CONTROL JOINT PER DETAIL 7, SHEET C5.01.

(P03) CONCRETE PAVEMENT CONNECTON TO EXISTING CONCRETE PAVEMENT PER DETAIL 5, SHEET C5.01.

(P04) CONCRETE PAVEMENT CONNECTON TO EXISTING ASPHALT PAVEMENT PER DETAIL 6, SHEET C5.01.

(P05) CONCRETE PAVEMENT AGAINST EXISTING WALL PER DETAIL 2, SHEET C5.01.

LEGEND

SAWCUT AND JOIN

GRADE BREAK

CONCRETE PAVING
(REFER TO SHEET C5.00 FOR DETAILS)

NOTE TO CONTRACTOR/CONSTRUCTION SURVEYOR:
CONSTRUCTION STAKING FOR IMPROVEMENTS SHOWN ON THESE PLANS SHALL BE PERFORMED BY A LICENSED LAND SURVEYOR. CONSTRUCTION STAKING SURVEYOR SHALL BE RESPONSIBLE FOR COORDINATION OF THESE PLANS WITH SOURCE DRAWINGS PREPARED BY ARCHITECT, LANDSCAPE ARCHITECT, STRUCTURAL ENGINEER, MEP CONSULTANT AND ANY OTHER DISCIPLINE. PRIOR TO START OF STAKING AND CONSTRUCTION, ANY DISCREPANCIES THAT OCCUR SHALL BE BROUGHT TO THE ATTENTION OF THE ARCHITECT PRIOR TO THE START OF CONSTRUCTION SO THAT A CLARIFICATION CAN BE ISSUED.

NOTES

1. CONTRACTOR TO VERIFY LIMITS OF HARDSCAPE REPLACEMENT ALIGN WITH EXISTING CONSTRUCTION JOINTS. CONTRACTOR TO NOTIFY ENGINEER IF DISCREPANCIES ARE FOUND.
2. REFER TO ARCHITECTURAL SHEET A2.11 FOR ADDITIONAL INFORMATION.

DIVISION OF THE STATE ARCHITECT

DSA APP # 03-XXXXXX

LOS ANGELES UNIFIED SCHOOL DISTRICT

ASSET MANAGEMENT
FACILITIES SERVICES DIVISION
333 S. BEAUDRY AVENUE, 23RD FLOOR
LOS ANGELES, CALIFORNIA 90017

PROJECT TITLE AND SCHOOL LOCATION

BASSETT STREET
ELEMENTARY SCHOOL
15756 BASSETT ST
LAKE BALBOA, CA 91406

VOLUNTARY BARRIER REMOVAL

COLIN NO: 10371927

COMMISSIONED ARCHITECT

Swift Lee Office
543A S. Raymond Ave.
Pasadena, CA 91105
T. 323 257 8200
www.swiftleeoffice.com

CONSULTANT

kpff
700 South Flower Street
Suite 2100
Los Angeles, CA 90017
O: 213.418.0201
www.kpff.com

STAMPS/SEALS

△ 50% CD	12.18.23
△ 100% CD PROGRESS SET	04.02.24
△ 100% CD	06.03.24
△	

SHEET TITLE

KINDERGARTEN BUILDING DEMOLITION, GRADING AND PAVING PLAN

PROJECT NO.: PROJECT ARCH.
DRAWN: CHECKED:

SHEET NUMBER

C1.15

DATE: SHEET OF

Bassett Elementary School (2323)
15756 Bassett St., Lake Balboa, CA 91406
ADA Improvements Project
Sampled By: CNS Eric Bracamontes
Sample Date: 07-12-2024

Grounds
(2323-G)
AREA "D" w/
Patch #2 & #3

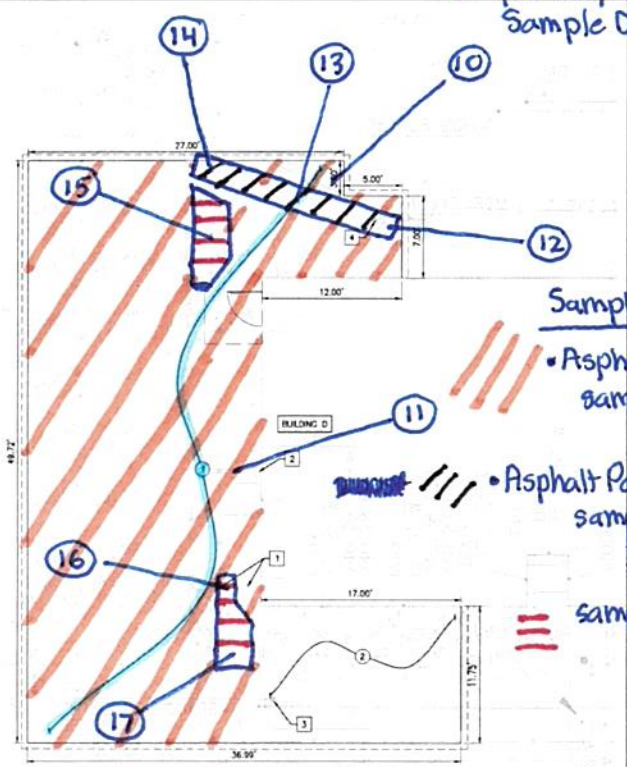

Sample Material:

- Asphalt Paving (CORE)
  sample #: 10, 11
  1,045 s.f
- Asphalt Paving - Patch (CORE)
  sample #: 12-14
  30 s.f.

= sample #: 15-17
55 s.f.

ARCHITECTUAL BARRIER LIST:
#82-LKASNCD-135179
#83-LKASNCD-135180

BUILDING D WEST EXTERIOR DEMOLITION PLAN
SCALE: 1"=5'

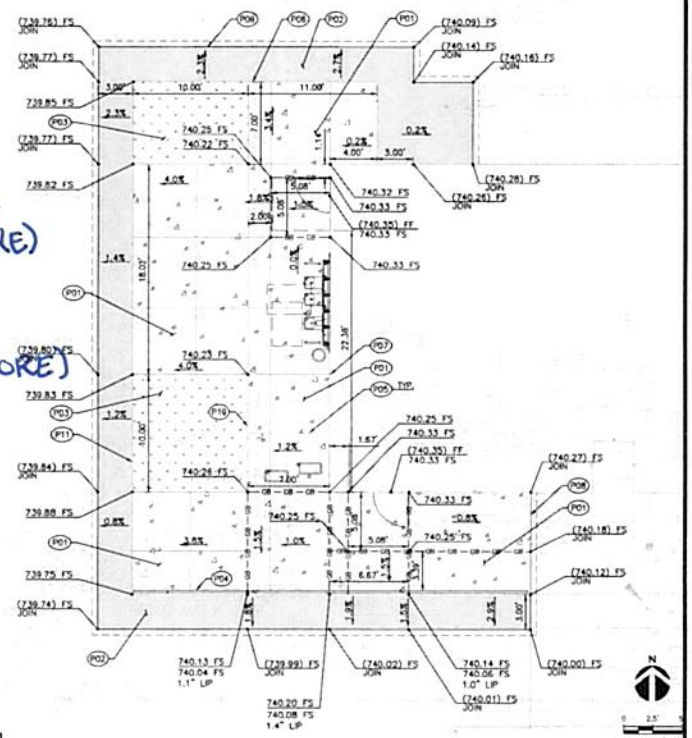

ARCHITECTUAL BARRIER LIST:
#82-LKASNCD-135179
#83-LKASNCD-135180

BUILDING D WEST EXTERIOR GRADING & PAVING PLAN
SCALE: 1"=5'

GENERAL DEMOLITION NOTES:

1. CONTRACTOR TO CLEAR PROJECT SITE AREA WITHIN THE CONFINES OF THE DEMOLITION LIMIT LINE. THE CONTRACTOR SHALL DEMOLISH AND REMOVE FROM THE SITE ALL EXISTING UTILITIES, STRUCTURES, PLANTERS, TREES, AND ALL OTHER SITE FEATURES, UNLESS OTHERWISE NOTED ON THE PLAN.
2. REMOVAL OF LANDSCAPING SHALL INCLUDE ROOTS AND ORGANIC MATERIALS.
3. THE CONTRACTOR SHALL BE RESPONSIBLE FOR OBTAINING ANY AND ALL PERMITS AND SHALL PAY ALL FEES NECESSARY FOR ENCROACHMENT, GRADING, DEMOLITION AND DISPOSAL OF SAID MATERIALS AS REQUIRED BY PRIVATE, LOCAL AND STATE JURISDICTIONS.
4. THE CONTRACTOR SHALL BE RESPONSIBLE FOR A SITE INSPECTION TO FULLY ACKNOWLEDGE THE EXTENT OF THE DEMOLITION WORK.
5. THE CONTRACTOR SHALL VERIFY AND LOCATE ALL EXISTING ABOVE AND UNDERGROUND UTILITIES. LOCATIONS SHOWN ON THE PLANS ARE APPROXIMATE AND ARE SHOWN FOR GENERAL INFORMATION ONLY.
6. DAMAGE TO ANY EXISTING UTILITIES AND SERVICES TO REMAIN SHALL BE THE RESPONSIBILITY OF THE CONTRACTOR. CONTRACTOR SHALL REPAIR AND/OR REPLACE IN KIND.
7. EROSION CONTROL MEASURES SHALL BE IMPLEMENTED TO PREVENT DEBRIS AND UNSUITABLE MATERIALS FROM ENTERING STORM DRAINS, SANITARY SEWERS AND STREETS.
8. DUST CONTROL SHALL BE IMPLEMENTED DURING DEMOLITION.
9. DEMOLITION IS LIMITED TO WITHIN DEMOLITION LIMIT LINE UNLESS NOTED OTHERWISE.
10. THE CONTRACTOR SHALL VERIFY THE LOCATION AND QUANTITY OF EXISTING SURFACE STRUCTURES AND SHALL BE SOLELY RESPONSIBLE FOR ANY UNIDENTIFIED UTILITIES, IMPROVEMENTS, TREES, ETC. TO BE DEMOLISHED AND REMOVED WITHIN THE DEMOLITION LIMIT LINE, INCLUDING APPURTENANT FOUNDATIONS OR SUPPORTS.
11. DEMOLITION CALLOUTS IN THIS SECTION ARE REPRESENTATIVE OF WHAT IS TO BE DONE, NOT AN ITEMIZED ACCOUNTING FOR EACH PIPE, CATCH BASIN, MANHOLE, VAULT, ETC. THAT IS TO BE DEMOLISHED, REMOVED AND DISPOSED OF.

LEGEND:

SAWCUT AND JOIN

DEMOLITION NOTES:

PROTECT-IN-PLACE

1. PROTECT-IN-PLACE EXISTING WATER VALVE BOX. ADJUST TO GRADE.
2. PROTECT-IN-PLACE EXISTING PULL BOX. ADJUST TO GRADE.
3. PROTECT-IN-PLACE EXISTING CHISELED SQUARE BENCHMARK.
4. PROTECT-IN-PLACE EXISTING CLEANOUT. ADJUST TO GRADE.

DEMOLISH & REMOVE

1. DEMOLISH & REMOVE EXISTING ASPHALT PAVEMENT.
2. DEMOLISH & REMOVE EXISTING CONCRETE PAVEMENT.

NOTES

1. REFER TO ARCHITECTURAL SHEET A4.20 FOR ADDITIONAL INFORMATION.

PAVING CONSTRUCTION NOTES

- (P01) CONCRETE WALK PER DETAIL 2, SHEET C5.00.
- (P02) ASPHALT PAVEMENT PER DETAIL 3, SHEET C5.00.
- (P03) LANDSCAPE. REFER TO LANDSCAPE PLANS FOR DETAILS.
- (P04) HANDRAIL PER ARCHITECTURAL PLANS.
- (P05) CONTROL JOINT PER DETAIL 7, SHEET C5.01.
- (P06) CONCRETE PAVEMENT CONNECTION TO EXISTING ASPHALT PAVEMENT PER DETAIL 6, SHEET C5.01.
- (P07) CONCRETE PAVEMENT REPLACEMENT AGAINST EXISTING WALL PER DETAIL 2, SHEET C5.01.
- (P08) CONCRETE PAVEMENT CONNECTION TO EXISTING CONCRETE PAVEMENT PER DETAIL 5, SHEET C5.01.
- (P09) ASPHALT PAVEMENT CONNECTION TO EXISTING ASPHALT PAVEMENT PER DETAIL 8, SHEET C5.01.
- (P10) CONCRETE PAVEMENT CONNECTION TO PLANTER PER DETAIL 10, SHEET C5.01.
- (P11) ASPHALT PAVEMENT CONNECTION TO PLANTER PER DETAIL 1, SHEET C5.02.

LEGEND

SAWCUT AND JOIN
GRADE BREAK
CONCRETE PAVING (REFER TO SHEET C5.00 FOR DETAILS)
ASPHALT PAVING (REFER TO SHEET C5.00 FOR DETAILS)
LANDSCAPE (REFER TO LANDSCAPE PLANS FOR DETAILS)

NOTES

1. CONTRACTOR TO VERIFY LIMITS OF HARDSCAPE REPLACEMENT. MATCH EXISTING CONSTRUCTION JOINTS. CONTRACTOR TO NOTIFY ENGINEER IF DISCREPANCIES ARE FOUND.
2. REFER TO ARCHITECTURAL SHEET A4.21 FOR ADDITIONAL INFORMATION.

NOTE TO CONTRACTOR/CONSTRUCTION SURVEYOR:
CONSTRUCTION STAKING FOR IMPROVEMENTS SHOWN ON THESE PLANS SHALL BE PERFORMED BY A LICENSED LAND SURVEYOR. CONSTRUCTION STAKING SURVEYOR SHALL BE RESPONSIBLE FOR COORDINATION OF THESE PLANS WITH SOURCE DRAWINGS PREPARED BY ARCHITECT, LANDSCAPE ARCHITECT, STRUCTURAL ENGINEER, MEP CONSULTANT AND ANY OTHER DISCIPLINE PRIOR TO START OF STAKING AND CONSTRUCTION. ANY DISCREPANCIES THAT OCCUR SHALL BE BROUGHT TO THE ATTENTION OF THE ARCHITECT PRIOR TO THE START OF CONSTRUCTION SO THAT A CLARIFICATION CAN BE ISSUED.

DIVISION OF THE STATE ARCHITECT

DSA APP # 03-XXXXXX

LOS ANGELES UNIFIED SCHOOL DISTRICT

ASSET MANAGEMENT
FACILITIES SERVICES DIVISION
333 S. BEAUDRY AVENUE, 23RD FLOOR
LOS ANGELES, CALIFORNIA 90017

PROJECT TITLE AND SCHOOL LOCATION

BASSETT STREET
ELEMENTARY SCHOOL
15756 BASSETT ST
LAKE BALBOA, CA 91406

VOLUNTARY BARRIER REMOVAL

COLIN NO: 10371927

COMMISSIONED ARCHITECT

Swift Lee Office
543A S. Raymond Ave
Pasadena, CA 91105
T. 323.257.8200
www.swiftleeoffice.com

CONSULTANT

kpff
700 South Flower Street
Suite 2100
Los Angeles, CA 90017
O: 213.418.0201
www.kpff.com

STAMPS/SEALS

△ 50% CD	12.18.23
△ 100% CD PROGRESS SET	04.02.24
△ 100% CD	06.03.24
△	

SHEET TITLE:

BUILDING D WEST EXTERIOR DEMOLITION, GRADING AND PAVING PLAN

PROJECT NO.: | PROJECT ARCH.
DRAWN: | CHECKED:

SHEET NUMBER

C1.16

DATE: | SHEET OF:

P:\2023\2300349 LAUSD Bassett ES- ADA Upgrades & CAD\Drawing\2300349-C1.16DD-GP-PV.dwg Jun 03, 2024 - 10:01am

Grounds
(2323-G)
AREA "E"

Bassett Elementary School (2323)
15756 Bassett St., Lake Balboa, CA 91406
ADA Improvements Project
Sampled By: CNS Eric Bracamontes
Sample Date: 07-12-2024

Sample Material:

5 sf • Asphalt Paving (CORE)
Sample #: 18 - 20

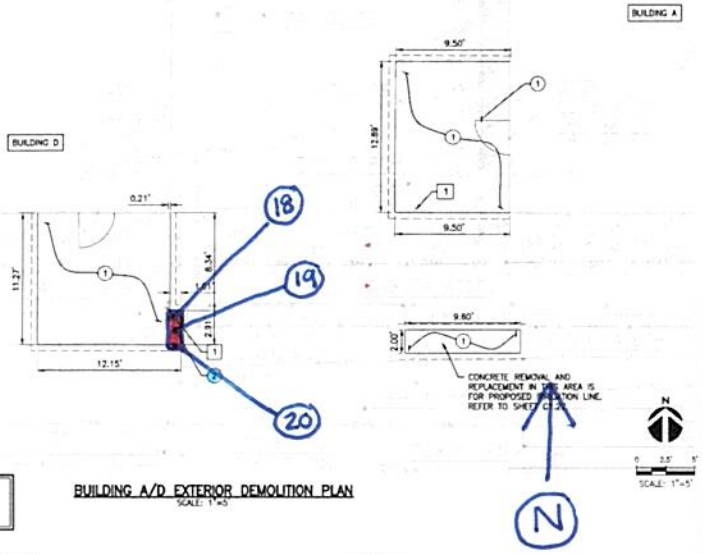

ARCHITECTUAL BARRIER LIST:
#87-LKASNCD-135188
#48-LKASNGA-135100

BUILDING A/D EXTERIOR DEMOLITION PLAN
SCALE: 1"=5'

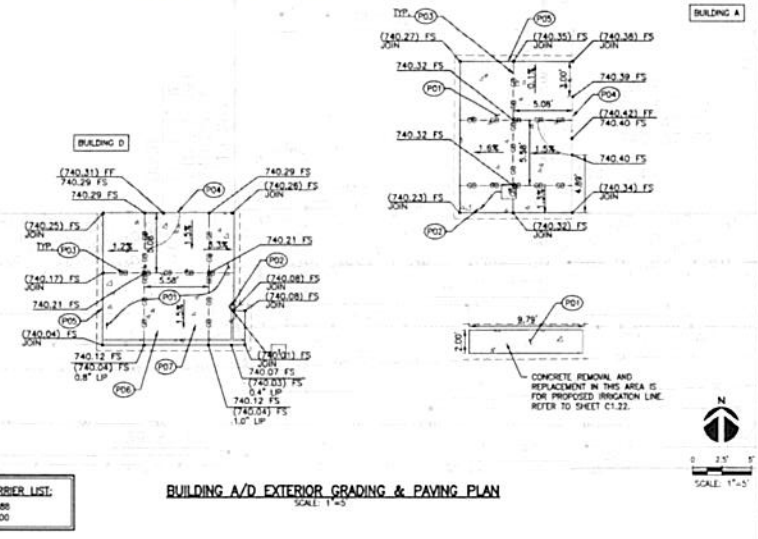

ARCHITECTUAL BARRIER LIST:
#87-LKASNCD-135188
#48-LKASNGA-135100

BUILDING A/D EXTERIOR GRADING & PAVING PLAN
SCALE: 1"=5'

GENERAL DEMOLITION NOTES:

1. CONTRACTOR TO CLEAR PROJECT SITE AREA WITHIN THE CONFINES OF THE DEMOLITION LIMIT LINE. THE CONTRACTOR SHALL DEMOLISH AND REMOVE FROM THE SITE ALL EXISTING UTILITIES, STRUCTURES, PLANTERS, TREES, AND ALL OTHER SITE FEATURES, UNLESS OTHERWISE NOTED ON THE PLAN.
2. REMOVAL OF LANDSCAPING SHALL INCLUDE ROOTS AND ORGANIC MATERIALS.
3. THE CONTRACTOR SHALL BE RESPONSIBLE FOR OBTAINING ANY AND ALL PERMITS AND SHALL PAY ALL FEES NECESSARY FOR ENCROACHMENT, GRADING, DEMOLITION AND DISPOSAL OF SAID MATERIALS AS REQUIRED BY PRIVATE, LOCAL AND STATE JURISDICTIONS.
4. THE CONTRACTOR SHALL BE RESPONSIBLE FOR A SITE INSPECTION TO FULLY ACKNOWLEDGE THE EXTENT OF THE DEMOLITION WORK.
5. THE CONTRACTOR SHALL VERIFY AND LOCATE ALL EXISTING ABOVE AND UNDERGROUND UTILITIES. LOCATIONS SHOWN ON THE PLANS ARE APPROXIMATE AND ARE SHOWN FOR GENERAL INFORMATION ONLY.
6. DAMAGE TO ANY EXISTING UTILITIES AND SERVICES TO REMAIN SHALL BE THE RESPONSIBILITY OF THE CONTRACTOR. CONTRACTOR SHALL REPAIR AND/OR REPLACE IN KIND.
7. EROSION CONTROL MEASURES SHALL BE IMPLEMENTED TO PREVENT DEBRIS AND UNSUITABLE MATERIALS FROM ENTERING STORM DRAINS, SANITARY SEWERS AND STREETS.
8. DUST CONTROL SHALL BE IMPLEMENTED DURING DEMOLITION.
9. DEMOLITION IS LIMITED TO WITHIN DEMOLITION LIMIT LINE UNLESS NOTED OTHERWISE.
10. THE CONTRACTOR SHALL VERIFY THE LOCATION AND QUANTITY OF EXISTING SURFACE STRUCTURES AND SHALL BE SOLELY RESPONSIBLE FOR ANY UNIDENTIFIED UTILITIES, IMPROVEMENTS, TREES, ETC. TO BE DEMOLISHED AND REMOVED WITHIN THE DEMOLITION LIMIT LINE, INCLUDING APPURTENANT FOUNDATIONS OR SUPPORTS.
11. DEMOLITION CALLOUTS IN THIS SECTION ARE REPRESENTATIVE OF WHAT IS TO BE DONE, NOT AN ITEMIZED ACCOUNTING FOR EACH PIPE, CATCH BASIN, MANHOLE, VAULT, ETC. THAT IS TO BE DEMOLISHED, REMOVED AND DISPOSED OF.

LEGEND:

SAWCUT AND JOIN

EXISTING FOUNDATION

DEMOLITION NOTES:

PROTECT-IN-PLACE

1. PROTECT-IN-PLACE EXISTING COLUMN PER DETAIL 8 ON SHEET C5.00.
2. PROTECT-IN-PLACE EXISTING WATER LINE.
3. PROTECT-IN-PLACE EXISTING COMMUNICATION LINE.

DEMOLISH & REMOVE

1. DEMOLISH & REMOVE EXISTING CONCRETE PAVEMENT.
2. DEMOLISH & REMOVE EXISTING ASPHALT PAVEMENT.

NOTES

1. REFER TO ARCHITECTURAL SHEETS A4.20 AND A8.20 FOR ADDITIONAL INFORMATION.

PAVING CONSTRUCTION NOTES

- (P01) CONCRETE WALK, PER DETAIL 2, SHEET C5.00.
- (P02) CONCRETE PAVEMENT REPLACEMENT AROUND EXISTING COLUMN PER DETAIL 8,SHEET C5.00.
- (P03) CONTROL JOINT PER DETAIL 7, SHEET C5.01.
- (P04) CONCRETE PAVEMENT REPLACEMENT AGAINST EXISTING WALL PER DETAIL 2, SHEET C5.01.
- (P05) CONCRETE PAVEMENT CONNECTION TO EXISTING CONCRETE PAVEMENT PER DETAIL 5, SHEET C5.01.
- (P06) STEEL PIPE GUARDRAIL. REFER TO ARCHITECTURAL SHEET A4.21.
- (P07) 10"Wx6"H CONCRETE CURB. REFER TO ARCHITECTURAL SHEET A4.21.

LEGEND

SAWCUT AND JOIN

GRADE BREAK

CONCRETE PAVING
(REFER TO SHEET C5.00 FOR DETAILS)

EXISTING FOUNDATION

NOTES

1. CONTRACTOR TO VERIFY LIMITS OF HARDSCAPE REPLACEMENT MATCH EXISTING CONSTRUCTION JOINTS. CONTRACTOR TO NOTIFY ENGINEER IF DISCREPANCIES ARE FOUND.
2. REFER TO ARCHITECTURAL SHEETS A4.21 AND A8.21 FOR ADDITIONAL INFORMATION.

NOTE TO CONTRACTOR/CONSTRUCTION SURVEYOR:
CONSTRUCTION STAKING FOR IMPROVEMENTS SHOWN ON THESE PLANS SHALL BE PERFORMED BY A LICENSED LAND SURVEYOR. CONSTRUCTION STAKING SURVEYOR SHALL BE RESPONSIBLE FOR COORDINATION OF THESE PLANS WITH SOURCE DRAWINGS PREPARED BY ARCHITECT, LANDSCAPE ARCHITECT, STRUCTURAL ENGINEER, MEP CONSULTANT AND ANY OTHER DISCIPLINE PRIOR TO START OF STAKING AND CONSTRUCTION. ANY DISCREPANCIES THAT OCCUR SHALL BE BROUGHT TO THE ATTENTION OF THE ARCHITECT PRIOR TO THE START OF CONSTRUCTION SO THAT A CLARIFICATION CAN BE ISSUED.

DIVISION OF THE STATE ARCHITECT

DSA APP # 03-XXXXXX

LOS ANGELES UNIFIED SCHOOL DISTRICT

ASSET MANAGEMENT
FACILITIES SERVICES DIVISION
333 S. BEAUDRY AVENUE, 23RD FLOOR
LOS ANGELES, CALIFORNIA 90017

PROJECT TITLE AND SCHOOL LOCATION

BASSETT STREET
ELEMENTARY SCHOOL
15756 BASSETT ST
LAKE BALBOA, CA 91406

VOLUNTARY BARRIER REMOVAL

COLIN NO: 10371927

COMMISSIONED ARCHITECT

Swift Lee Office
543A S. Raymond Ave.
Pasadena, CA 91105
T. 323.257.8200
www.swiftleeoffice.com

CONSULTANT

kpff
700 South Flower Street
Suite 2100
Los Angeles, CA 90017
O: 213.418.0201
www.kpff.com

STAMPS/SEALS

△ 50% CD	12.18.23
△ 100% CD PROGRESS SET	04.02.24
△ 100% CD	06.03.24
△	

SHEET TITLE

BUILDING A-D
EXTERIOR
DEMOLITION, GRADING
AND PAVING PLAN

PROJECT NO.: | PROJECT ARCH.
DRAWN: | CHECKED:

SHEET NUMBER

C1.17

DATE: | SHEET | OF

P:\2021-210148 LAUSD Bassett ES - ADA Upgrade\5 CAD\Sheets\210148-C1.17CD-GP.PV Aug Jun 03, 2024 - 10:01am

Sample Material:

250sf • Asphalt Paving (CORE)
Sample #: 21-23

235sf • Asphalt Paving - Patch (CORE)
Sample #: 24-26

Grounds
(2323-G)
AREA "F" w/
Patch #4

Bassett Elementary School (2323)
15756 Bassett St., Lake Balboa, CA 91406
ADA Improvements Project
Sampled By: CNS Eric Bracamontes
Sample Date: 07-12-2024

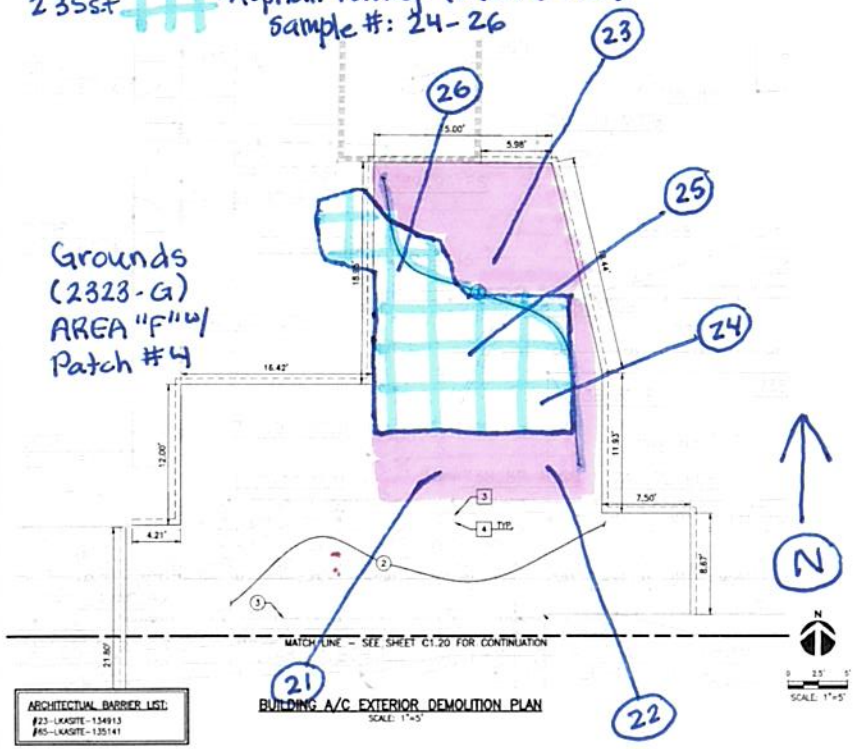

ARCHITECTUAL BARRIER LIST:
#23-LKASITE-134913
#65-LKASITE-135141

BUILDING A/C EXTERIOR DEMOLITION PLAN
SCALE: 1"=5'

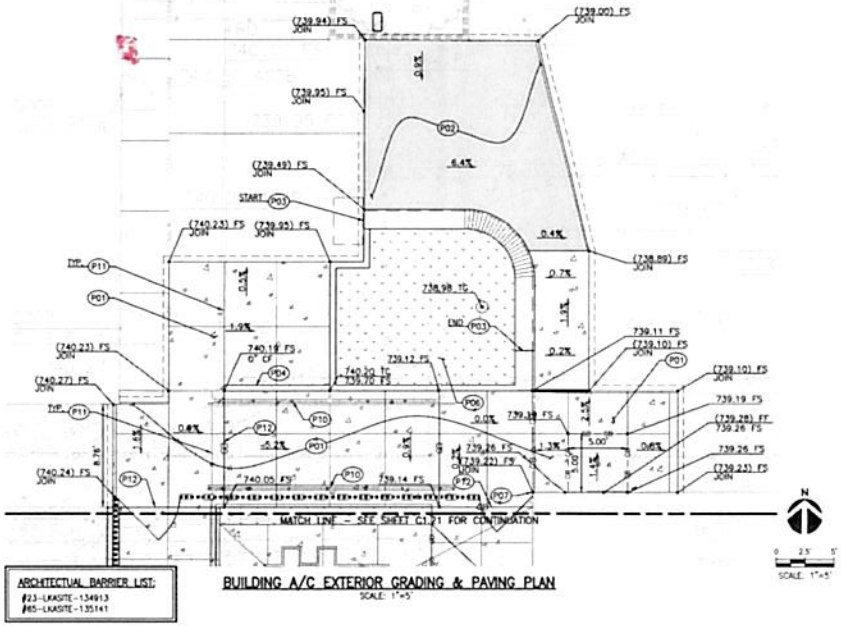

ARCHITECTUAL BARRIER LIST:
#23-LKASITE-134913
#65-LKASITE-135141

BUILDING A/C EXTERIOR GRADING & PAVING PLAN
SCALE: 1"=5'

GENERAL DEMOLITION NOTES:

1. CONTRACTOR TO CLEAR PROJECT SITE AREA WITHIN THE CONFINES OF THE DEMOLITION LIMIT LINE. THE CONTRACTOR SHALL DEMOLISH AND REMOVE FROM THE SITE ALL EXISTING UTILITIES, STRUCTURES, PLANTERS, TREES, AND ALL OTHER SITE FEATURES, UNLESS OTHERWISE NOTED ON THE PLAN.
2. REMOVAL OF LANDSCAPING SHALL INCLUDE ROOTS AND ORGANIC MATERIALS.
3. THE CONTRACTOR SHALL BE RESPONSIBLE FOR OBTAINING ANY AND ALL PERMITS AND SHALL PAY ALL FEES NECESSARY FOR ENCROACHMENT, GRADING, DEMOLITION AND DISPOSAL OF SAID MATERIALS AS REQUIRED BY PRIVATE, LOCAL AND STATE JURISDICTIONS.
4. THE CONTRACTOR SHALL BE RESPONSIBLE FOR A SITE INSPECTION TO FULLY ACKNOWLEDGE THE EXTENT OF THE DEMOLITION WORK.
5. THE CONTRACTOR SHALL VERIFY AND LOCATE ALL EXISTING ABOVE AND UNDERGROUND UTILITIES. LOCATIONS SHOWN ON THE PLANS ARE APPROXIMATE AND ARE SHOWN FOR GENERAL INFORMATION ONLY.
6. DAMAGE TO ANY EXISTING UTILITIES AND SERVICES TO REMAIN SHALL BE THE RESPONSIBILITY OF THE CONTRACTOR. CONTRACTOR SHALL REPAIR AND/OR REPLACE IN KIND.
7. EROSION CONTROL MEASURES SHALL BE IMPLEMENTED TO PREVENT DEBRIS AND UNSUITABLE MATERIALS FROM ENTERING STORM DRAINS, SANITARY SEWERS AND STREETS.
8. DUST CONTROL SHALL BE IMPLEMENTED DURING DEMOLITION.
9. DEMOLITION IS LIMITED TO WITHIN DEMOLITION LIMIT LINE UNLESS NOTED OTHERWISE.
10. THE CONTRACTOR SHALL VERIFY THE LOCATION AND QUANTITY OF EXISTING SURFACE STRUCTURES AND SHALL BE SOLELY RESPONSIBLE FOR ANY UNIDENTIFIED UTILITIES, IMPROVEMENTS, TREES, ETC. TO BE DEMOLISHED AND REMOVED WITHIN THE DEMOLITION LIMIT LINE, INCLUDING APPURTENANT FOUNDATIONS OR SUPPORTS.
11. DEMOLITION CALLOUTS IN THIS SECTION ARE REPRESENTATIVE OF WHAT IS TO BE DONE, NOT AN ITEMIZED ACCOUNTING FOR EACH PIPE, CATCH BASIN, MANHOLE, VAULT, ETC. THAT IS TO BE DEMOLISHED, REMOVED AND DISPOSED OF.

DEMOLITION NOTES:

PROTECT-IN-PLACE

1. PROTECT-IN-PLACE EXISTING FENCE.
2. PROTECT-IN-PLACE EXISTING LANDSCAPE AREA.
3. PROTECT-IN-PLACE EXISTING ROOF DRAIN. PER DETAIL 9 ON SHEET C5.00.
4. PROTECT-IN-PLACE EXISTING COLUMN PER DETAIL 8 ON SHEET C5.00.

DEMOLISH & REMOVE

1. DEMOLISH & REMOVE EXISTING ASPHALT PAVEMENT.
2. DEMOLISH & REMOVE EXISTING CONCRETE PAVEMENT.
3. DEMOLISH & REMOVE EXISTING FENCE.
4. DEMOLISH & REMOVE EXISTING CATCH BASINS.
5. DEMOLISH & REMOVE EXISTING PAVEMENT ADJACENT TO BUILDING PER DETAIL 10 ON SHEET C5.00.

LEGEND:

SAWCUT AND JOIN

EXISTING FOUNDATION

PAVING CONSTRUCTION NOTES

- P01 CONCRETE PAVEMENT. PER DETAIL 2 ON SHEET C5.00.
- P02 ASPHALT PAVEMENT. PER DETAIL 3 ON SHEET C5.00.
- P03 CONCRETE SEAT WALL. PER DETAILS ON ARCHITECTURAL SHEET A1.42.
- P04 CONCRETE CURB. PER DETAIL 6 ON SHEET C5.00.
- P05 DECOMPOSED GRANITE. REFER TO LANDSCAPE SHEETS L3.02 AND L3.03 FOR PLANTING DETAILS.
- P06 LANDSCAPE. REFER TO LANDSCAPE SHEETS L3.02 AND L3.03 FOR PLANTING DETAILS.
- P07 CONCRETE PAVEMENT REPLACEMENT AROUND EXISTING COLUMN. PER DETAIL 8 ON SHEET C5.00.
- P08 ROOF DRAIN ADJUSTMENT PER DETAIL 9 ON SHEET C5.00.
- P09 CONCRETE PAVEMENT CONNECTION TO PROPOSED LANDSCAPE/DG. PER DETAIL 2 ON SHEET C5.00.
- P10 HANDRAIL. PER DETAILS 2 & 11, ARCHITECTURAL SHEET A9.8.
- P11 CONTROL JOINT PER DETAIL 7, SHEET C5.01.
- P12 EXPANSION JOINT PER DETAIL 11, SHEET C5.00.

LEGEND

SAWCUT AND JOIN

GB GRADE BREAK

CONCRETE PAVING
(REFER TO SHEET C5.00 FOR DETAILS)

ASPHALT
(REFER TO SHEET C5.00 FOR DETAILS)

LANDSCAPE
(REFER TO LANDSCAPE PLANS FOR DETAILS)

EXISTING FOUNDATION

NOTE TO CONTRACTOR/CONSTRUCTION SURVEYOR:
CONSTRUCTION STAKING FOR IMPROVEMENTS SHOWN ON THESE PLANS SHALL BE PERFORMED BY A LICENSED LAND SURVEYOR. CONSTRUCTION STAKING SURVEYOR SHALL BE RESPONSIBLE FOR COORDINATION OF THESE PLANS WITH SOURCE DRAWINGS PREPARED BY ARCHITECT, LANDSCAPE ARCHITECT, STRUCTURAL ENGINEER, MEP CONSULTANT AND ANY OTHER DISCIPLINE PRIOR TO START OF STAKING AND CONSTRUCTION. ANY DISCREPANCIES THAT OCCUR SHALL BE BROUGHT TO THE ATTENTION OF THE ARCHITECT PRIOR TO THE START OF CONSTRUCTION SO THAT A CLARIFICATION CAN BE ISSUED.

NOTES

1. CONTRACTOR TO VERIFY LIMITS OF HARDSCAPE REPLACEMENT WITH EXISTING CONSTRUCTION JOINTS. CONTRACTOR TO NOTIFY ENGINEER IF DISCREPANCIES ARE FOUND.

DIVISION OF THE STATE ARCHITECT

DSA APP # 03-XXXXXX

LOS ANGELES UNIFIED SCHOOL DISTRICT

ASSET MANAGEMENT
FACILITIES SERVICES DIVISION
333 S. BEAUDRY AVENUE, 23RD FLOOR
LOS ANGELES, CALIFORNIA 90017

PROJECT TITLE AND SCHOOL LOCATION

BASSETT STREET
ELEMENTARY SCHOOL
15756 BASSETT ST
LAKE BALBOA, CA 91406

VOLUNTARY BARRIER REMOVAL

COLIN NO: 10371927

COMMISSIONED ARCHITECT

Swift Lee Office
543A S. Raymond Ave
Pasadena, CA 91105
T. 323.257.8200
www.swifteeoffice.com

CONSULTANT

kpff
700 South Flower Street
Suite 2100
Los Angeles, CA 90017
O: 213.418.0201
www.kpff.com

STAMPS/SEALS

△ 50% CD	12.18.23
△ 100% CD PROGRESS SET	04.02.24
△ 100% CD	06.03.24
△	

SHEET TITLE

BUILDING A-C
EXTERIOR
DEMOLITION, GRADING
AND PAVING PLAN

PROJECT NO.: PROJECT ARCH:
DRAWN: CHECKED:
SHEET NUMBER

C1.19

SHEET OF

P:\2023\2303349 LAUSD Bassett ES - ADA Upgrades\CAD\Arch\2303349-C1.19DD-GP-PV.dwg, Jun 03, 2024 - 10:02am

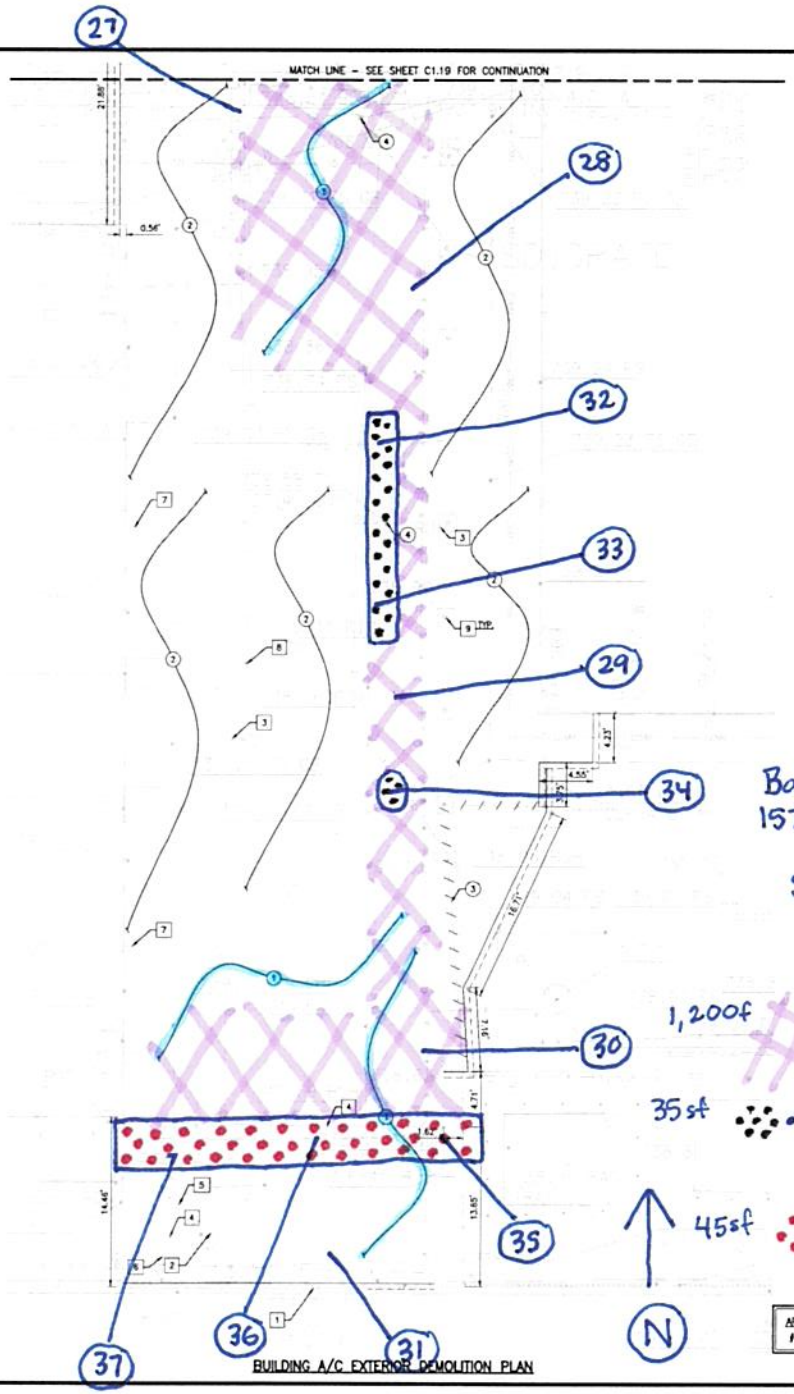

BUILDING A/C EXTERIOR DEMOLITION PLAN

Grounds
(2323-G)
AREA "G" w/
Patches #5 & #6

GENERAL DEMOLITION NOTES:

1. CONTRACTOR TO CLEAR PROJECT SITE AREA WITHIN THE CONFINES OF THE DEMOLITION LIMIT LINE. THE CONTRACTOR SHALL DEMOLISH AND REMOVE FROM THE SITE ALL EXISTING UTILITIES, STRUCTURES, PLANTERS, TREES, AND ALL OTHER SITE FEATURES, UNLESS OTHERWISE NOTED ON THE PLAN.
2. REMOVAL OF LANDSCAPING SHALL INCLUDE ROOTS AND ORGANIC MATERIALS.
3. THE CONTRACTOR SHALL BE RESPONSIBLE FOR OBTAINING ANY AND ALL PERMITS AND SHALL PAY ALL FEES NECESSARY FOR ENCROACHMENT, GRADING, DEMOLITION AND DISPOSAL OF SAID MATERIALS AS REQUIRED BY PRIVATE, LOCAL AND STATE JURISDICTIONS.
4. THE CONTRACTOR SHALL BE RESPONSIBLE FOR A SITE INSPECTION TO FULLY ACKNOWLEDGE THE EXTENT OF THE DEMOLITION WORK.
5. THE CONTRACTOR SHALL VERIFY AND LOCATE ALL EXISTING ABOVE AND UNDERGROUND UTILITIES. LOCATIONS SHOWN ON THE PLANS ARE APPROXIMATE AND ARE SHOWN FOR GENERAL INFORMATION ONLY.
6. DAMAGE TO ANY EXISTING UTILITIES AND SERVICES TO REMAIN SHALL BE THE RESPONSIBILITY OF THE CONTRACTOR. CONTRACTOR SHALL REPAIR AND/OR REPLACE IN KIND.
7. EROSION CONTROL MEASURES SHALL BE IMPLEMENTED TO PREVENT DEBRIS AND UNSUITABLE MATERIALS FROM ENTERING STORM DRAINS, SANITARY SEWERS AND STREETS.
8. DUST CONTROL SHALL BE IMPLEMENTED DURING DEMOLITION.
9. DEMOLITION IS LIMITED TO WITHIN DEMOLITION LIMIT LINE UNLESS NOTED OTHERWISE.
10. THE CONTRACTOR SHALL VERIFY THE LOCATION AND QUANTITY OF EXISTING SURFACE STRUCTURES AND SHALL BE SOLELY RESPONSIBLE FOR ANY UNIDENTIFIED UTILITIES, IMPROVEMENTS, TREES, ETC. TO BE DEMOLISHED AND REMOVED WITHIN THE DEMOLITION LIMIT LINE, INCLUDING APPURTENANT FOUNDATIONS OR SUPPORTS.
11. DEMOLITION CALLOUTS IN THIS SECTION ARE REPRESENTATIVE OF WHAT IS TO BE DONE, NOT AN ITEMIZED ACCOUNTING FOR EACH PIPE, CATCH BASIN, MANHOLE, VAULT, ETC. THAT IS TO BE DEMOLISHED, REMOVED AND DISPOSED OF.

DEMOLITION NOTES:

PROTECT-IN-PLACE

1. PROTECT-IN-PLACE EXISTING FENCE.
2. PROTECT-IN-PLACE EXISTING LANDSCAPE AREA.
3. PROTECT-IN-PLACE EXISTING ROOF DRAIN.
4. PROTECT-IN-PLACE EXISTING WATER VALVE. ADJUST TO GRADE.
5. PROTECT-IN-PLACE EXISTING GROUND BOX. ADJUST TO GRADE.
6. PROTECT-IN-PLACE EXISTING STUB UPS.
7. PROTECT-IN-PLACE EXISTING HVAC UNIT.
8. PROTECT-IN-PLACE EXISTING STORM DRAIN CLEANOUT. ADJUST TO GRADE.
9. PROTECT-IN-PLACE EXISTING COLUMN PER DETAIL 8 ON SHEET C5.00.

DEMOLISH & REMOVE

1. DEMOLISH & REMOVE EXISTING ASPHALT PAVEMENT.
2. DEMOLISH & REMOVE EXISTING CONCRETE PAVEMENT.
3. DEMOLISH & REMOVE EXISTING FENCE.
4. DEMOLISH & REMOVE EXISTING CATCH BASINS.

LEGEND:

SAWCUT AND JOIN

EXISTING FOUNDATION

Bassett Elementary School (2323)
15756 Bassett St., Lake Balboa, CA 91406
ADA Improvements Project
Sampled By: GNS Eric Bracamontes
Sample Date: 07-12-2024

Sample Material:

1,200sf • Asphalt Paving (CORE)
sample #: 27-31

35sf • Asphalt Paving - Patch (CORE)
sample #: 32-34

45sf sample #: 35-37

ARCHITECTUAL BARRIER LIST:
#137-NO ABL

SCALE: 1"=5'

DIVISION OF THE STATE ARCHITECT

DSA APP # 03-XXXXXX

LOS ANGELES UNIFIED SCHOOL DISTRICT

ASSET MANAGEMENT FACILITIES SERVICES DIVISION
333 S. BEAUDRY AVENUE, 23RD FLOOR
LOS ANGELES, CALIFORNIA 90017

PROJECT TITLE AND SCHOOL LOCATION

BASSETT STREET ELEMENTARY SCHOOL
15756 BASSETT ST
LAKE BALBOA, CA 91406

VOLUNTARY BARRIER REMOVAL

COLIN NO 10371927

COMMISSIONED ARCHITECT

Swift Lee Office
543A S. Raymond Ave.
Pasadena, CA 91105
T. 323.257.8200
www.swiftleeoffice.com

CONSULTANT

kpff
700 South Flower Street
Suite 2100
Los Angeles, CA 90017
O: 213.418.0201
www.kpff.com

STAMPS/SEALS

50% CD	12.18.23
100% CD PROGRESS SET	04.02.24
100% CD	06.03.24

SHEET TITLE

BUILDING B-C PLAY AREA DEMOLITION PLAN

PROJECT NO.: PROJECT MGR.
DRAWN: CHECKED:
SHEET NUMBER

C1.20

DATE: SHEET OF

P:\2021\2001343 LAUSD Bassett ES ADA Upgrades\CAD\Drawings\2001343-C1.20-GP-PV.dwg Jun 03, 2024 - 10:20am

Grounds
(2323-G)
AREA "H"
Patch #7

Bassett Elementary School (2323)
15756 Bassett St., Lake Balboa, CA 91406
ADA Improvements Project
Sampled By: CNS Eric Bracamontes
Sample Date: 07-12-2024

Sample Material:

300sf • Asphalt Paving (CORE)
Sample #: 38-40

58sf [redacted] • Asphalt Paving - Patch (CORE)
Sample #: 41-43

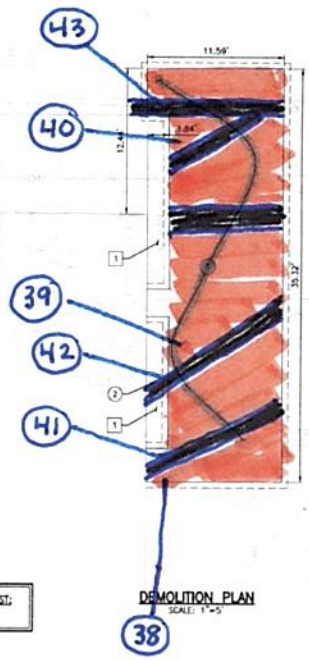

N

ARCHITECTUAL BARRIER LIST:
#125-LKASITE-134915

DEMOLITION PLAN
SCALE: 1"=5'

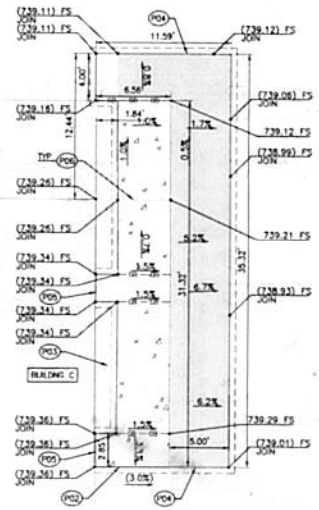

ARCHITECTUAL BARRIER LIST:
#125-LKASITE-134915

GRADING & PAVING PLAN
SCALE: 1"=5'

GENERAL DEMOLITION NOTES:

1. CONTRACTOR TO CLEAR PROJECT SITE AREA WITHIN THE CONFINES OF THE DEMOLITION LIMIT LINE. THE CONTRACTOR SHALL DEMOLISH AND REMOVE FROM THE SITE ALL EXISTING UTILITIES, STRUCTURES, PLANTERS, TREES, AND ALL OTHER SITE FEATURES, UNLESS OTHERWISE NOTED ON THE PLAN.
2. REMOVAL OF LANDSCAPING SHALL INCLUDE ROOTS AND ORGANIC MATERIALS.
3. THE CONTRACTOR SHALL BE RESPONSIBLE FOR OBTAINING ANY AND ALL PERMITS AND SHALL PAY ALL FEES NECESSARY FOR ENCROACHMENT, GRADING, DEMOLITION AND DISPOSAL OF SAID MATERIALS AS REQUIRED BY PRIVATE, LOCAL AND STATE JURISDICTIONS.
4. THE CONTRACTOR SHALL BE RESPONSIBLE FOR A SITE INSPECTION TO FULLY ACKNOWLEDGE THE EXTENT OF THE DEMOLITION WORK.
5. THE CONTRACTOR SHALL VERIFY AND LOCATE ALL EXISTING ABOVE AND UNDERGROUND UTILITIES. LOCATIONS SHOWN ON THE PLANS ARE APPROXIMATE AND ARE SHOWN FOR GENERAL INFORMATION ONLY.
6. DAMAGE TO ANY EXISTING UTILITIES AND SERVICES TO REMAIN SHALL BE THE RESPONSIBILITY OF THE CONTRACTOR. CONTRACTOR SHALL REPAIR AND/OR REPLACE IN KIND.
7. EROSION CONTROL MEASURES SHALL BE IMPLEMENTED TO PREVENT DEBRIS AND UNSUITABLE MATERIALS FROM ENTERING STORM DRAINS, SANITARY SEWERS AND STREETS.
8. DUST CONTROL SHALL BE IMPLEMENTED DURING DEMOLITION.
9. DEMOLITION IS LIMITED TO WITHIN DEMOLITION LIMIT LINE UNLESS NOTED OTHERWISE.
10. THE CONTRACTOR SHALL VERIFY THE LOCATION AND QUANTITY OF EXISTING SURFACE STRUCTURES AND SHALL BE SOLELY RESPONSIBLE FOR ANY UNIDENTIFIED UTILITIES, IMPROVEMENTS, TREES, ETC. TO BE DEMOLISHED AND REMOVED WITHIN THE DEMOLITION LIMIT LINE, INCLUDING APPURTENANT FOUNDATIONS OR SUPPORTS.
11. DEMOLITION CALLOUTS IN THIS SECTION ARE REPRESENTATIVE OF WHAT IS TO BE DONE, NOT AN ITEMIZED ACCOUNTING FOR EACH PIPE, CATCH BASIN, MANHOLE, VAULT, ETC. THAT IS TO BE DEMOLISHED, REMOVED AND DISPOSED OF.

DEMOLITION NOTES:

DEMOLISH & REMOVE

1. DEMOLISH & REMOVE EXISTING ASPHALT PAVEMENT.
2. DEMOLISH & REMOVE EXISTING DRINKING FOUNTAIN. REFER TO ARCHITECTURAL DETAIL 8, SHEET A5.20.

PROTECT-IN-PLACE

1. PROTECT-IN-PLACE EXISTING CONCRETE PAVEMENT AND FOUNDATION.

LEGEND:

SAWCUT AND JOIN

PAVING CONSTRUCTION NOTES

(P01) ASPHALT PAVEMENT. PER DETAIL 1 ON SHEET C5.00.

(P02) CONCRETE PAVEMENT CONNECTION TO EXISTING CONCRETE PAVEMENT PER DETAIL 5, SHEET C5.01.

(P03) DRINKING FOUNTAIN. REFER TO ARCHITECTURAL DETAIL 8, SHEET A5.21.

(P04) ASPHALT PAVEMENT CONNECTION TO EXISTING ASPHALT PAVEMENT PER DETAIL 8, SHEET C5.01.

(P05) CONCRETE PAVEMENT AGAINST EXISTING WALL PER DETAIL 2, SHEET C5.01.

(P06) CONTROL JOINT PER DETAIL 7, SHEET C5.01.

NOTE TO CONTRACTOR/CONSTRUCTION SURVEYOR:
CONSTRUCTION STAKING FOR IMPROVEMENTS SHOWN ON THESE PLANS SHALL BE PERFORMED BY A LICENSED LAND SURVEYOR. CONSTRUCTION STAKING SURVEYOR SHALL BE RESPONSIBLE FOR COORDINATION OF THESE PLANS WITH SOURCE DRAWINGS PREPARED BY ARCHITECT, LANDSCAPE ARCHITECT, STRUCTURAL ENGINEER, MEP CONSULTANT AND ANY OTHER DISCIPLINE PRIOR TO START OF STAKING AND CONSTRUCTION. ANY DISCREPANCIES THAT OCCUR SHALL BE BROUGHT TO THE ATTENTION OF THE ARCHITECT PRIOR TO THE START OF CONSTRUCTION SO THAT A CLARIFICATION CAN BE ISSUED.

NOTES

1. CONTRACTOR TO VERIFY LIMITS OF HARDSCAPE REPLACEMENT. MATCH EXISTING CONSTRUCTION JOINTS. CONTRACTOR TO NOTIFY ENGINEER IF DISCREPANCIES ARE FOUND.

LEGEND

SAWCUT AND JOIN

GRADE BREAK

ASPHALT
(REFER TO SHEET C5.00 FOR DETAILS)

DIVISION OF THE STATE ARCHITECT

DSA APP # 03-XXXXXX

LOS ANGELES UNIFIED SCHOOL DISTRICT

ASSET MANAGEMENT
FACILITIES SERVICES DIVISION
333 S. BEAUDRY AVENUE, 23RD FLOOR
LOS ANGELES, CALIFORNIA 90017

PROJECT TITLE AND SCHOOL LOCATION

BASSETT STREET
ELEMENTARY SCHOOL
15756 BASSETT ST
LAKE BALBOA, CA 91406

VOLUNTARY BARRIER REMOVAL

COLN NO: 10371927

COMMISSIONED ARCHITECT

Swift Lee Office
543A S. Raymond Ave
Pasadena, CA 91105
T. 323.257.8200
www.swiftleeoffice.com

CONSULTANT

kpff
700 South Flower Street
Suite 2100
Los Angeles, CA 90017
O: 213.418.0201
www.kpff.com

STAMPS/SEALS

50% CD	12.18.23
100% CD PROGRESS SET	04.02.24
100% CD	06.03.24

SHEET TITLE

BUILDING C EAST
DEMOLITION, GRADING
AND PAVING PLAN

PROJECT NO.: | PROJECT ARCH.
DRAWN: | CHECKED:
SHEET NUMBER

C1.24

DATE: | SHEET OF:

P:\2023\2300340 LAUSD Bassett ES- ADA Upgrade\CAD\Sheets\2300340-C1.24(C-GP-PV).dwg, Jul 01, 2024 - 10:22am

LOS ANGELES UNIFIED SCHOOL DISTRICT
FACILITIES SERVICES DIVISION
CHAIN-OF-CUSTODY FOR BULK ANALYSIS

54238

SITE NAME: Bassett Elementary School CODE: 2323 PROJECT DESC ADA Improvements COLIN #: 10373370

SAMPLED BY: Eric Bracamontes DATE SAMPLED: 07-12-2024 DEPT. / CONSULTANT: CNS Environmental, Inc. TEL: (714) 525-5115

Fill in all information legibly and precisely. Original must be submitted with the samples. Make a copy before submitting samples. Results and a copy of the Chain of Custody (COC) with sample numbers will be submitted to FETU when analysis is completed. ***USE BLACK/BLUE INK ONLY. DO NOT USE WHITE OUT! ALL RUSH ANALYSIS AND POINT COUNT REQUESTS MUST BE APPROVED BY FETU SUPERVISORS.***

LAB NUMBER	SAMPLE NUMBER	BUILDING NUMBER	BUILDING NAME	ROOM NUMBER AND/OR NAME	LOCATION IN ROOM	MATERIAL TYPE (DESCRIBE)	FRIABLE (YES or NO)
2407-1222	01	2323-G	Grounds	Area A N. Parking Lot	N/E Area - North East	Asphalt Paving (core)	No
2407-1223	02	↓	↓	↓	↓ - center	↓	↓
2407-1224	03	↓	↓	↓	↓ - south West	↓	↓
2407-1225	04	↓	↓	Area B Patch #1	North West	Asphalt Paving - Patch (core)	↓
2407-1226	05	↓	↓	↓	Center	↓	↓
2407-1227	06	↓	↓	↓	South East	↓	↓
2407-1228	07	↓	↓	Area C Kindergarden Play area	south area - South West	Asphalt Paving (core)	↓
2407-1229	08	↓	↓	↓	↓ - south	↓	↓
2407-1230	09	↓	↓	↓	↓ - East	↓	↓

	NAME (PRINT & SIGN)	DEPT./AREA/CONSULTANT	# OF SAMPLES	DATE	TIME
Relinquished By:	E. Bracamontes	CNS Env.	9	07-12-24	10:15p
Received By:	Luis Flores	CNS Env.	9	07-12-24	10:15p
Relinquished By:	Luis Flores	CNS Env.	9	07-12-24	11:30am
Received By:	ARTURO CASOS	FSD LAB	9	7/12/24	11:50A

Maximo Work Order Number: 38050584 Project Type: ☐ Maintenance (MA) ☐ Deferred Maintenance ☐ Bond (specify: K,R,Y,Q) ☐ Other:

FETU USE ONLY

FETU REVIEWED BY: MR RUSH? ☐ Yes ☐ No APPROVAL:

FETU REVIEW DATE: 7-13-24 POINT COUNT? ☐ Yes ☐ No PT. CT. RUSH? ☐ Yes ☐ No APPROVAL:

Los Angeles Unified School District
Facilities Services Division Laboratory
1449 S. San Pedro St.
Los Angeles, CA 90015
(213)745-1138

Asbestos Bulk Sample Analysis Laboratory Report

Laboratory Report

BASSETT ST ELEM

2323

NVLAP (TESTING) LAB# 101505-0
Method EPA/600/R-93/116(MOD) July 1993
Date Received: 07/12/2024

LAUSD Lab#	MIC	Date Analyzed	BUILDING/AREA SAMPLED	MATERIAL DESCRIPTION	CHR %	AM %	CROC %	TREM %	ACT %	ANTH %	TOTAL %	MATERIAL BACKGROUND
2024071222	RC	07/16/2024	2323-G : GROUNDS AREA A N. PARKING LOT N/E AREA - NORTHEAST	HOMOGENEOUS; NON-FRIABLE; BLACK; ASPHALT; TARLIKE, ROCK	0	0	0	0	0	0	0	ASPHALT, ROCK, TAR
2024071223	RC	07/16/2024	2323-G : GROUNDS AREA A N. PARKING LOT N/E AREA - CENTER	HOMOGENEOUS; NON-FRIABLE; BLACK; ASPHALT; TARLIKE, ROCK	0	0	0	0	0	0	0	ASPHALT, ROCK, TAR
2024071224	RC	07/16/2024	2323-G : GROUNDS AREA A N. PARKING LOT N/E AREA - SOUTHWEST	HOMOGENEOUS; NON-FRIABLE; BLACK; ASPHALT; TARLIKE, ROCK	0	0	0	0	0	0	0	ASPHALT, ROCK, TAR
2024071225	RC	07/16/2024	2323-G : GROUNDS AREA B PATCH #1 NORTHWEST	HOMOGENEOUS; NON-FRIABLE; BLACK; ASPHALT; TARLIKE, ROCK	0	0	0	0	0	0	0	ASPHALT, ROCK, TAR
2024071226	RC	07/16/2024	2323-G : GROUNDS AREA B PATCH #1 CENTER	HOMOGENEOUS; NON-FRIABLE; BLACK; ASPHALT; TARLIKE, ROCK	0	0	0	0	0	0	0	ASPHALT, ROCK, TAR
2024071227	RC	07/16/2024	2323-G : GROUNDS AREA B PATCH #1 SOUTHEAST	HOMOGENEOUS; NON-FRIABLE; BLACK; ASPHALT; TARLIKE, ROCK	0	0	0	0	0	0	0	ASPHALT, ROCK, TAR
2024071228	RC	07/16/2024	2323-G : GROUNDS AREA C KINDERGARTEN PLAY AREA SOUTH AREA - SOUTHWEST	HOMOGENEOUS; NON-FRIABLE; BLACK; ASPHALT; TARLIKE, ROCK	0	0	0	0	0	0	0	ASPHALT, ROCK, TAR

Lab Supervisor Signature and Date _____ 7 / 17 / 24

Signature of Analyst _____

Note: 0%: No Asbestos Detected; <1%: Asbestos Detected Above 0% and Below or Equal to 1%
NA: Not Applicable ""Quantification done by optical estimate"" 1 - 5 % considered non-quantifiable.
This report relates to only the material tested. An asterisk '*' indicates preliminary results.
The laboratory is not responsible for samples and data collected by personnel who are not part of the laboratory.

This report is not used by LAUSD to claim product endorsement by NVLAP or any agency of the U.S. Government.
This report may not be reproduced except in its entirety.

Los Angeles Unified School District
Facilities Services Division Laboratory
1449 S. San Pedro St.
Los Angeles, CA 90015
(213)745-1138

Asbestos Bulk Sample Analysis Laboratory Report

Laboratory Report

BASSETT ST ELEM
2323

NVLAP (TESTING) LAB# 101505-0
Method EPA/600/R-93/116(MOD) July 1993
Date Received: 07/12/2024

LAUSD Lab#	MIC	Date Analyzed	BUILDING/AREA SAMPLED	MATERIAL DESCRIPTION	CHR %	AM %	CROC %	TREM %	ACT %	ANTH %	TOTAL %	MATERIAL BACKGROUND
2024071229	RC	07/16/2024	2323-G : GROUNDS AREA C KINDERGARTEN PLAY AREA SOUTH AREA - SOUTH	HOMOGENEOUS; NON-FRIABLE; BLACK; ASPHALT; TARLIKE, ROCK	0	0	0	0	0	0	0	ASPHALT, ROCK, TAR
2024071230	RC	07/16/2024	2323-G : GROUNDS AREA C KINDERGARTEN PLAY AREA SOUTH AREA - EAST	HOMOGENEOUS; NON-FRIABLE; BLACK; ASPHALT; TARLIKE, ROCK	0	0	0	0	0	0	0	ASPHALT, ROCK, TAR

Lab Supervisor Signature and Date _____ 7 / 17 / 24

Signature of Analyst _____

Note: 0%: No Asbestos Detected; <1%: Asbestos Detected Above 0% and Below or Equal to 1%
NA: Not Applicable. ""Quantification done by optical estimate"" 1 - 5 % considered non-quantifiable.
This report relates to only the material tested. An asterisk '*' indicates preliminary results.
The laboratory is not responsible for samples and data collected by personnel who are not part of the laboratory.

This report is not used by LAUSD to claim product endorsement by NVLAP
or any agency of the U.S. Government.
This report may not be reproduced except in its entirety.

LOS ANGELES UNIFIED SCHOOL DISTRICT
FACILITIES SERVICES DIVISION
CHAIN-OF-CUSTODY FOR BULK ANALYSIS

54239

SITE NAME: Bassett Elementary School CODE: 2323 PROJECT DESC ADA Improvements COLIN #: 10373370

SAMPLED BY: Eric Bracamontes DATE SAMPLED: 07-12-2024 DEPT. / CONSULTANT: CNS Environmental, Inc. TEL: (714) 525-5115

Fill in all information legibly and precisely. Original must be submitted with the samples. Make a copy before submitting samples. Results and a copy of the Chain of Custody (COC) with sample numbers will be submitted to FETU when analysis is completed. ***USE BLACK/BLUE INK ONLY. DO NOT USE WHITE OUT! ALL RUSH ANALYSIS AND POINT COUNT REQUESTS MUST BE APPROVED BY FETU SUPERVISORS.***

LAB NUMBER	SAMPLE NUMBER	BUILDING NUMBER	BUILDING NAME	ROOM NUMBER AND/OR NAME	LOCATION IN ROOM	MATERIAL TYPE (DESCRIBE)	FRIABLE (YES or NO)
2407-1231	10	2323-G	Grounds	Area D	North East	Asphalt Paving (core)	No
2407-1232	11	↓	↓	↓	East	↓	↓
2407-1233	12	↓	↓	Patch #2	East	Asphalt Paving - Patch (core)	↓
2407-1234	13	↓	↓	↓	center	↓	↓
2407-1235	14	↓	↓	↓	West	↓	↓
2407-1236	15	↓	↓	Patch #3	North Patch - center	↓	↓
2407-1237	16	↓	↓	↓	South Patch - North	↓	↓
2407-1238	17	↓	↓	↓	↓ - South	↓	↓
2407-1239	18	↓	↓	Area E	North	Asphalt Paving (core)	↓
2407-1240	19	↓	↓	↓	Center	↓	↓
2407-1241	20	↓	↓	↓	South	↓	↓

	NAME (PRINT & SIGN)	DEPT./AREA/CONSULTANT	# OF SAMPLES	DATE	TIME
Relinquished By:	E. Bracamontes / [signature]	CNS Env.	11	07-12-24	10:15p
Received By:	Luis Flores [signature]	CNS Env.	11	07-12-24	10:15p
Relinquished By:	Luis Flores [signature]	CNS Env.	11	07-12-24	11:30am
Received By:	Arturo Cosos [signature]	FSD LAB	11	7/12/24	11:30am

Maximo Work Order Number: 38050584 Project Type: ☐ Maintenance (MA) ☐ Deferred Maintenance ☐ Bond (specify: K,R,Y,Q) ☐ Other:

FETU USE ONLY

FETU REVIEWED BY: [signature] RUSH? ☐ Yes ☐ No APPROVAL:

FETU REVIEW DATE: 7-12-24 POINT COUNT? ☐ Yes ☐ No PT. CT. RUSH? ☐ Yes ☐ No APPROVAL:

Los Angeles Unified School District
Facilities Services Division Laboratory
1449 S. San Pedro St.
Los Angeles, CA 90015
(213)745-1138

Asbestos Bulk Sample Analysis Laboratory Report

Laboratory Report

BASSETT ST ELEM

2323

NVLAP (TESTING) LAB# 101505-0
Method EPA/600/R-93/116(MOD) July 1993
Date Received: 07/12/2024

LAUSD Lab#	MIC	Date Analyzed	BUILDING/AREA SAMPLED	MATERIAL DESCRIPTION	CHR %	AM %	CROC %	TREM %	ACT %	ANTH %	TOTAL %	MATERIAL BACKGROUND
2024071231	RC	07/16/2024	2323-G : GROUNDS AREA D NORTHEAST	HOMOGENEOUS; NON-FRIABLE; BLACK; ASPHALT; TARLIKE, ROCK	0	0	0	0	0	0	0	ASPHALT, ROCK, TAR
2024071232	RC	07/16/2024	2323-G : GROUNDS AREA D EAST	HOMOGENEOUS; NON-FRIABLE; BLACK; ASPHALT; TARLIKE, ROCK	0	0	0	0	0	0	0	ASPHALT, ROCK, TAR
2024071233	RC	07/16/2024	2323-G : GROUNDS PATCH #2 EAST	HOMOGENEOUS; NON-FRIABLE; BLACK; ASPHALT; TARLIKE, ROCK	0	0	0	0	0	0	0	ASPHALT, ROCK, TAR
2024071234	RC	07/16/2024	2323-G : GROUNDS PATCH #2 CENTER	HOMOGENEOUS; NON-FRIABLE; BLACK; ASPHALT; TARLIKE, ROCK	0	0	0	0	0	0	0	ASPHALT, ROCK, TAR
2024071235	RC	07/16/2024	2323-G : GROUNDS PATCH #2 WEST	HOMOGENEOUS; NON-FRIABLE; BLACK; ASPHALT; TARLIKE, ROCK	0	0	0	0	0	0	0	ASPHALT, ROCK, TAR
2024071236	RC	07/16/2024	2323-G : GROUNDS PATCH #3 NORTH PATCH - CENTER	HOMOGENEOUS; NON-FRIABLE; BLACK; ASPHALT; TARLIKE, ROCK	0	0	0	0	0	0	0	ASPHALT, ROCK, TAR
2024071237	RC	07/16/2024	2323-G : GROUNDS PATCH #3 SOUTH PATCH - NORTH	HOMOGENEOUS; NON-FRIABLE; BLACK; ASPHALT; TARLIKE, ROCK	0	0	0	0	0	0	0	ASPHALT, ROCK, TAR

Lab Supervisor Signature and Date _____ 7 / 17 / 24

Signature of Analyst _____

Note: 0%: No Asbestos Detected; <1%: Asbestos Detected Above 0% and Below or Equal to 1%
NA: Not Applicable. ""Quantification done by optical estimate"" 1 - 5 % considered non-quantifiable.
This report relates to only the material tested. An asterisk '*' indicates preliminary results.
The laboratory is not responsible for samples and data collected by personnel who are not part of the laboratory.

This report is not used by LAUSD to claim product endorsement by NVLAP
or any agency of the U.S. Government.
This report may not be reproduced except in its entirety.

Los Angeles Unified School District
Facilities Services Division Laboratory
1449 S. San Pedro St.
Los Angeles, CA 90015
(213)745-1138

Asbestos Bulk Sample Analysis Laboratory Report

Laboratory Report

BASSETT ST ELEM
2323

NVLAP (TESTING) LAB# 101505-0
Method EPA/600/R-93/116(MOD) July 1993
Date Received: 07/12/2024

LAUSD Lab#	MIC	Date Analyzed	BUILDING/AREA SAMPLED	MATERIAL DESCRIPTION	CHR %	AM %	CROC %	TREM %	ACT %	ANTH %	TOTAL %	MATERIAL BACKGROUND
2024071238	RC	07/16/2024	2323-G : GROUNDS PATCH #3 SOUTH PATCH - SOUTH	HOMOGENEOUS; NON-FRIABLE; BLACK; ASPHALT; TARLIKE, ROCK	0	0	0	0	0	0	0	ASPHALT, ROCK, TAR
2024071239	RC	07/16/2024	2323-G : GROUNDS AREA E NORTH	HOMOGENEOUS; NON-FRIABLE; BLACK; ASPHALT; TARLIKE, ROCK	0	0	0	0	0	0	0	ASPHALT, ROCK, TAR
2024071240	RC	07/16/2024	2323-G : GROUNDS AREA E CENTER	HOMOGENEOUS; NON-FRIABLE; BLACK; ASPHALT; TARLIKE, ROCK	0	0	0	0	0	0	0	ASPHALT, ROCK, TAR
2024071241	RC	07/16/2024	2323-G : GROUNDS AREA E SOUTH	HOMOGENEOUS; NON-FRIABLE; BLACK; ASPHALT; TARLIKE, ROCK	0	0	0	0	0	0	0	ASPHALT, ROCK, TAR

Lab Supervisor Signature and Date _____ 7 / 17 / 24

Signature of Analyst _____

Note: 0%: No Asbestos Detected, <1%: Asbestos Detected Above 0% and Below or Equal to 1%
NA: Not Applicable. ""Quantification done by optical estimate"" 1 - 5 % considered non-quantifiable.
This report relates to only the material tested. An asterisk '*' indicates preliminary results.
The laboratory is not responsible for samples and data collected by personnel who are not part of the laboratory.

This report is not used by LAUSD to claim product endorsement by NVLAP
or any agency of the U.S. Government.
This report may not be reproduced except in its entirety.

LOS ANGELES UNIFIED SCHOOL DISTRICT
FACILITIES SERVICES DIVISION
CHAIN-OF-CUSTODY FOR BULK ANALYSIS

54240

SITE NAME: Bassett Elementary School CODE: 2323 PROJECT DESC ADA Improvements COLIN #: 10373370

SAMPLED BY: Eric Bracamontes DATE SAMPLED: 07-12-2024 DEPT. / CONSULTANT: CNS Environmental, Inc. TEL: (714) 525-5115

Fill in all information legibly and precisely. Original must be submitted with the samples. Make a copy before submitting samples. Results and a copy of the Chain of Custody (COC) with sample numbers will be submitted to FETU when analysis is completed. ***USE BLACK/BLUE INK ONLY. DO NOT USE WHITE OUT! ALL RUSH ANALYSIS AND POINT COUNT REQUESTS MUST BE APPROVED BY FETU SUPERVISORS.***

LAB NUMBER	SAMPLE NUMBER	BUILDING NUMBER	BUILDING NAME	ROOM NUMBER AND/OR NAME	LOCATION IN ROOM	MATERIAL TYPE (DESCRIBE)	FRIABLE (YES or NO)
2407-1242	21	2323-G	Grounds	Area F	South West	Asphalt Paving (core)	No
2407-1243	22	↓	↓	↓	South East	↓	↓
2407-1244	23	↓	↓	↓	North Center	↓	↓
2407-1245	24	↓	↓	Patch #4	South East	Asphalt Paving - Patch (core)	↓
2407-1246	25	↓	↓	↓	Center	↓	↓
2407-1247	26	↓	↓	↓	North West	↓	↓

	NAME (PRINT & SIGN)	DEPT./AREA/CONSULTANT	# OF SAMPLES	DATE	TIME
Relinquished By:	E. Bracamontes / [signature]	CNS Env.	6	07-12-2024	10:15p
Received By:	Luis Flores [signature]	CNS Env.	6	07-12-2024	10:15p
Relinquished By:	Luis Flores [signature]	CNS Env.	6	07-12-24	11:30am
Received By:	ARTURO CASAS [signature]	FSD LAB	6	7/12/24	11:30am

Maximo Work Order Number: 38050584 Project Type: ☐ Maintenance (MA) ☐ Deferred Maintenance ☐ Bond (specify: K,R,Y,Q) ☐ Other:

FETU USE ONLY

FETU REVIEWED BY: [signature] RUSH? ☐ Yes ☐ No APPROVAL:

FETU REVIEW DATE: 7/12/24 POINT COUNT? ☐ Yes ☐ No PT. CT. RUSH? ☐ Yes ☐ No APPROVAL:

Los Angeles Unified School District
Facilities Services Division Laboratory
1449 S. San Pedro St.
Los Angeles, CA 90015
(213)745-1138

Asbestos Bulk Sample Analysis Laboratory Report

Laboratory Report

BASSETT ST ELEM

2323

NVLAP (TESTING) LAB# 101505-0
Method EPA/600/R-93/116(MOD) July 1993
Date Received: 07/12/2024

LAUSD Lab#	MIC	Date Analyzed	BUILDING/AREA SAMPLED	MATERIAL DESCRIPTION	CHR %	AM %	CROC %	TREM %	ACT %	ANTH %	TOTAL %	MATERIAL BACKGROUND
2024071242	VP	07/16/2024	2323-G : GROUNDS AREA F SOUTHWEST	HOMOGENEOUS; NON-FRIABLE; BLACK; ASPHALT; TARLIKE, ROCK	0	0	0	0	0	0	0	ASPHALT, ROCK, TAR
2024071243	VP	07/16/2024	2323-G : GROUNDS AREA F SOUTHEAST	HOMOGENEOUS; NON-FRIABLE; BLACK; ASPHALT; TARLIKE, ROCK	<1	0	0	0	0	0	<1	ASPHALT, ROCK, TAR
2024071244	VP	07/16/2024	2323-G : GROUNDS AREA F NORTH CENTER	HOMOGENEOUS; NON-FRIABLE; BLACK; ASPHALT; TARLIKE, ROCK	0	0	0	0	0	0	0	ASPHALT, ROCK, TAR
2024071245	VP	07/16/2024	2323-G : GROUNDS PATCH #4 SOUTHEAST	HOMOGENEOUS; NON-FRIABLE; BLACK; ASPHALT; TARLIKE, ROCK	0	0	0	0	0	0	0	ASPHALT, ROCK, TAR
2024071246	VP	07/16/2024	2323-G : GROUNDS PATCH #4 CENTER	HOMOGENEOUS; NON-FRIABLE; BLACK; ASPHALT; TARLIKE, ROCK	0	0	0	0	0	0	0	ASPHALT, ROCK, TAR
2024071247	VP	07/16/2024	2323-G : GROUNDS PATCH #4 NORTHWEST	HOMOGENEOUS; NON-FRIABLE; BLACK; ASPHALT; TARLIKE, ROCK	0	0	0	0	0	0	0	ASPHALT, ROCK, TAR

Lab Supervisor Signature and Date _____ 7 / 17 / 24

Signature of Analyst _____

Note: 0%: No Asbestos Detected, <1%: Asbestos Detected Above 0% and Below or Equal to 1%
NA: Not Applicable. ""Quantification done by optical estimate"" 1 - 5 % considered non-quantifiable.
This report relates to only the material tested. An asterisk '*' indicates preliminary results.
The laboratory is not responsible for samples and data collected by personnel who are not part of the laboratory.

This report is not used by LAUSD to claim product endorsement by NVLAP
or any agency of the U.S. Government.
This report may not be reproduced except in its entirety.

Los Angeles Unified School District
Facilities Services Division
1449 S. San Pedro St.
Los Angeles, CA 90015
(213) 745-1138

Asbestos Point Count Analysis
Laboratory Report

BASSETT ST ELEM
2323

NVLAP (TESTING) LAB# 101505-0
Method EPA/600/R-93/116 (1000 Point Count)
Date Sampled: 7/12/2024
Date Received: 7/12/2024
Date Requested: 7/16/2024

LAUSD Lab#	MIC	Date Analyzed	Material Description	Percentage Reduction			Detection Limit	Counts		Analytical Results
				Ashed	Acidification	Total		Asbestos	Total	
2024071243	VP	7/17/2024	Asphalt	7.0848	1.5414	8.6262	0.09	2	1000	**0.18% Chrysotile**

Lab Supervisor Signature and Date: 7/17/24

Signature of Analyst: _____

This report relates to only the material tested. This report is not used by LAUSD to claim product endorsement by NVLAP or any agency of the U.S. Government.
This report not be reproduced except in its entirety.

LOS ANGELES UNIFIED SCHOOL DISTRICT
FACILITIES SERVICES DIVISION
CHAIN-OF-CUSTODY FOR BULK ANALYSIS

54241

SITE NAME: Bassett Elementary School CODE: 2323 PROJECT DESC ADA Improvements COLIN #: 10373370

SAMPLED BY: Eric Bracamontes DATE SAMPLED: 07-12-2024 DEPT. / CONSULTANT: CNS Environmental, Inc. TEL: (714) 525-5115

Fill in all information legibly and precisely. Original must be submitted with the samples. Make a copy before submitting samples. Results and a copy of the Chain of Custody (COC) with sample numbers will be submitted to FETU when analysis is completed. ***USE BLACK/BLUE INK ONLY. DO NOT USE WHITE OUT! ALL RUSH ANALYSIS AND POINT COUNT REQUESTS MUST BE APPROVED BY FETU SUPERVISORS.***

LAB NUMBER	SAMPLE NUMBER	BUILDING NUMBER	BUILDING NAME	ROOM NUMBER AND/OR NAME	LOCATION IN ROOM	MATERIAL TYPE (DESCRIBE)	FRIABLE (YES or NO)
2407-1248	27	2323-G	Grounds	Area G	North West	Asphalt Paving (core)	No
2407-1249	28	↓	↓	↓	North East	↓	↓
2407-1250	29	↓	↓	↓	East	↓	↓
2407-1251	30	↓	↓	↓	South East	↓	↓
2407-1252	31	↓	↓	↓	South	↓	↓
2407-1253	32	↓	↓	Patch #5	Center Patch - North	Asphalt Paving - Patch (core)	↓
2407-1254	33	↓	↓	↓	↓ - South West	↓	↓
2407-1255	34	↓	↓	↓	South center Patch - West	↓	↓
2407-1256	35	↓	↓	Patch #6	East	↓	↓
2407-1257	36	↓	↓	↓	Center	↓	↓
2407-1258	37	↓	↓	↓	South West	↓	↓

	NAME (PRINT & SIGN)	DEPT./AREA/CONSULTANT	# OF SAMPLES	DATE	TIME
Relinquished By:	E. Bracamontes	CNS Env.	11	07-12-2024	10:15p
Received By:	Luis Flores	CNS Env.	11	07-12-2024	10:15p
Relinquished By:	Luis Flores	CNS Env.	11	07-12-2024	11:30am
Received By:	ARTURO CASTRO	FSD Lab	11	7/12/24	11:30 Am

Maximo Work Order Number: 38050584 Project Type: ☐ Maintenance (MA) ☐ Deferred Maintenance ☐ Bond (specify: K,R,Y,Q) ☐ Other:

FETU USE ONLY

FETU REVIEWED BY: M

FETU REVIEW DATE: 7-12-24

RUSH? ☐ Yes ☐ No APPROVAL:

POINT COUNT? ☐ Yes ☐ No PT. CT. RUSH? ☐ Yes ☐ No APPROVAL:

Los Angeles Unified School District
Facilities Services Division Laboratory
1449 S. San Pedro St.
Los Angeles, CA 90015
(213)745-1138

Asbestos Bulk Sample Analysis Laboratory Report

Laboratory Report

BASSETT ST ELEM

2323

NVLAP (TESTING) LAB# 101505-0
Method EPA/600/R-93/116(MOD) July 1993
Date Received: 07/12/2024

LAUSD Lab#	MIC	Date Analyzed	BUILDING/AREA SAMPLED	MATERIAL DESCRIPTION	CHR %	AM %	CROC %	TREM %	ACT %	ANTH %	TOTAL %	MATERIAL BACKGROUND
2024071248	RC	07/16/2024	2323-G : GROUNDS AREA G NORTHWEST	HOMOGENEOUS; NON-FRIABLE; BLACK; ASPHALT; TARLIKE, ROCK	0	0	0	0	0	0	0	ASPHALT, ROCK, TAR
2024071249	RC	07/16/2024	2323-G : GROUNDS AREA G NORTHEAST	HOMOGENEOUS; NON-FRIABLE; BLACK; ASPHALT; TARLIKE, ROCK	0	0	0	0	0	0	0	ASPHALT, ROCK, TAR
2024071250	RC	07/16/2024	2323-G : GROUNDS AREA G EAST	HOMOGENEOUS; NON-FRIABLE; BLACK; ASPHALT; TARLIKE, ROCK	0	0	0	0	0	0	0	ASPHALT, ROCK, TAR
2024071251	RC	07/16/2024	2323-G : GROUNDS AREA G SOUTHEAST	HOMOGENEOUS; NON-FRIABLE; BLACK; ASPHALT; TARLIKE, ROCK	0	0	0	0	0	0	0	ASPHALT, ROCK, TAR
2024071252	RC	07/16/2024	2323-G : GROUNDS AREA G SOUTH	HOMOGENEOUS; NON-FRIABLE; BLACK; ASPHALT; TARLIKE, ROCK	0	0	0	0	0	0	0	ASPHALT, ROCK, TAR
2024071253	RC	07/16/2024	2323-G : GROUNDS PATCH #5 CENTER PATCH - NORTH	HOMOGENEOUS; NON-FRIABLE; BLACK; ASPHALT; TARLIKE, ROCK	0	0	0	0	0	0	0	ASPHALT, ROCK, TAR
2024071254	RC	07/16/2024	2323-G : GROUNDS PATCH #5 CENTER PATCH - SOUTHWEST	HOMOGENEOUS; NON-FRIABLE; BLACK; ASPHALT; TARLIKE, ROCK	0	0	0	0	0	0	0	ASPHALT, ROCK, TAR

Lab Supervisor Signature and Date _____ 7 / 17 / 24

Signature of Analyst _____

Note: 0%: No Asbestos Detected; <1%: Asbestos Detected Above 0% and Below or Equal to 1%
NA: Not Applicable. ""Quantification done by optical estimate"" 1 - 5 % considered non-quantifiable.
This report relates to only the material tested. An asterisk '*' indicates preliminary results.
The laboratory is not responsible for samples and data collected by personnel who are not part of the laboratory.

This report is not used by LAUSD to claim product endorsement by NVLAP or any agency of the U.S. Government.
This report may not be reproduced except in its entirety.

Los Angeles Unified School District
Facilities Services Division Laboratory
1449 S. San Pedro St.
Los Angeles, CA 90015
(213)745-1138

Asbestos Bulk Sample Analysis Laboratory Report

Laboratory Report

BASSETT ST ELEM

2323

NVLAP (TESTING) LAB# 101505-0
Method EPA/600/R-93/116(MOD) July 1993
Date Received: 07/12/2024

LAUSD Lab#	MIC	Date Analyzed	BUILDING/AREA SAMPLED	MATERIAL DESCRIPTION	CHR %	AM %	CROC %	TREM %	ACT %	ANTH %	TOTAL %	MATERIAL BACKGROUND
2024071255	RC	07/16/2024	2323-G : GROUNDS PATCH #5 SOUTH CENTER PATCH - WEST	HOMOGENEOUS; NON-FRIABLE; BLACK; ASPHALT; TARLIKE, ROCK	0	0	0	0	0	0	0	ASPHALT, ROCK, TAR
2024071256	RC	07/16/2024	2323-G : GROUNDS PATCH #6 EAST	HOMOGENEOUS; NON-FRIABLE; BLACK; ASPHALT; TARLIKE, ROCK	0	0	0	0	0	0	0	ASPHALT, ROCK, TAR
2024071257	RC	07/16/2024	2323-G : GROUNDS PATCH #6 CENTER	HOMOGENEOUS; NON-FRIABLE; BLACK; ASPHALT; TARLIKE, ROCK	0	0	0	0	0	0	0	ASPHALT, ROCK, TAR
2024071258	RC	07/16/2024	2323-G : GROUNDS PATCH #6 SOUTHWEST	HOMOGENEOUS; NON-FRIABLE; BLACK; ASPHALT; TARLIKE, ROCK	0	0	0	0	0	0	0	ASPHALT, ROCK, TAR

Lab Supervisor Signature and Date _____ 7 / 17 / 24

Signature of Analyst _____

Note: 0%: No Asbestos Detected; <1%: Asbestos Detected Above 0% and Below or Equal to 1%
NA: Not Applicable. ""Quantification done by optical estimate"" 1 - 5 % considered non-quantifiable.
This report relates to only the material tested. An asterisk '*' indicates preliminary results.
The laboratory is not responsible for samples and data collected by personnel who are not part of the laboratory.

This report is not used by LAUSD to claim product endorsement by NVLAP
or any agency of the U S Government.
This report may not be reproduced except in its entirety.

LOS ANGELES UNIFIED SCHOOL DISTRICT
FACILITIES SERVICES DIVISION
CHAIN-OF-CUSTODY FOR BULK ANALYSIS

54242

SITE NAME: Bassett Elementary School CODE: 2323 PROJECT DESC ADA Improvements COLIN #: 10373370

SAMPLED BY: Eric Bracamontes DATE SAMPLED: 07-12-2024 DEPT. / CONSULTANT: CNS Environmental, Inc. TEL: (714) 525-5115

Fill in all information legibly and precisely. Original must be submitted with the samples. Make a copy before submitting samples. Results and a copy of the Chain of Custody (COC) with sample numbers will be submitted to FETU when analysis is completed. ***USE BLACK/BLUE INK ONLY. DO NOT USE WHITE OUT! ALL RUSH ANALYSIS AND POINT COUNT REQUESTS MUST BE APPROVED BY FETU SUPERVISORS.***

LAB NUMBER	SAMPLE NUMBER	BUILDING NUMBER	BUILDING NAME	ROOM NUMBER AND/OR NAME	LOCATION IN ROOM	MATERIAL TYPE (DESCRIBE)	FRIABLE (YES or NO)
2407-1259	38	2323-G	Grounds	Area H	South West	Asphalt Paving (core)	No
2407-1260	39	↓	↓	↓	West	↓	↓
2407-1261	40	↓	↓	↓	North West	↓	↓
2407-1262	41	↓	↓	Patch #7	South Patch E.B. - ~~South~~ West	Asphalt Paving - Patch (core)	↓
2407-1263	42	↓	↓	↓	South Center Patch - West	↓	↓
2407-1264	43	↓	↓	↓	North Patch - West	↓	↓

	NAME (PRINT & SIGN)	DEPT./AREA/CONSULTANT	# OF SAMPLES	DATE	TIME
Relinquished By:	E. Bracamontes / [signature]	CNS Env.	6	07-12-2024	10:15p
Received By:	Luis Flores [signature]	CNS Env.	6	07-12-2024	10:15p
Relinquished By:	Luis Flores [signature]	CNS Env.	6	07-12-2024	11:30am
Received By:	Arturo Torres [signature]	FSD LAB	6	7/12/24	11:30Am

Maximo Work Order Number: 38050584 Project Type: ☐ Maintenance (MA) ☐ Deferred Maintenance ☐ Bond (specify: K,R,Y,Q) ☐ Other:

FETU USE ONLY

FETU REVIEWED BY: [signature]

FETU REVIEW DATE: 7-12-24

RUSH? ☐ Yes ☐ No APPROVAL:

POINT COUNT? ☐ Yes ☐ No PT. CT. RUSH? ☐ Yes ☐ No APPROVAL:

Los Angeles Unified School District
Facilities Services Division Laboratory
1449 S. San Pedro St.
Los Angeles, CA 90015
(213)745-1138

Asbestos Bulk Sample Analysis Laboratory Report

Laboratory Report

BASSETT ST ELEM

2323

NVLAP (TESTING) LAB# 101505-0
Method EPA/600/R-93/116(MOD) July 1993
Date Received: 07/12/2024

LAUSD Lab#	MIC	Date Analyzed	BUILDING/AREA SAMPLED	MATERIAL DESCRIPTION	CHR %	AM %	CROC %	TREM %	ACT %	ANTH %	TOTAL %	MATERIAL BACKGROUND
2024071259	VP	07/16/2024	2323-G : GROUNDS AREA H SOUTHWEST	HOMOGENEOUS; NON-FRIABLE; BLACK; ASPHALT; TARLIKE, ROCK	0	0	0	0	0	0	0	ASPHALT, ROCK, TAR
2024071260	VP	07/16/2024	2323-G : GROUNDS AREA H WEST	HOMOGENEOUS; NON-FRIABLE; BLACK; ASPHALT; TARLIKE, ROCK	0	0	0	0	0	0	0	ASPHALT, ROCK, TAR
2024071261	VP	07/16/2024	2323-G : GROUNDS AREA H NORTHWEST	HOMOGENEOUS; NON-FRIABLE; BLACK; ASPHALT; TARLIKE, ROCK	0	0	0	0	0	0	0	ASPHALT, ROCK, TAR
2024071262	VP	07/16/2024	2323-G : GROUNDS PATCH #7 SOUTH PATCH - WEST	HOMOGENEOUS; NON-FRIABLE; BLACK; ASPHALT; TARLIKE, ROCK	0	0	0	0	0	0	0	ASPHALT, ROCK, TAR
2024071263	VP	07/16/2024	2323-G : GROUNDS PATCH #7 SOUTH CENTER PATCH - WEST	HOMOGENEOUS; NON-FRIABLE; BLACK; ASPHALT; TARLIKE, ROCK	0	0	0	0	0	0	0	ASPHALT, ROCK, TAR
2024071264	VP	07/16/2024	2323-G : GROUNDS PATCH #7 NORTH PATCH - WEST	HOMOGENEOUS; NON-FRIABLE; BLACK; ASPHALT; TARLIKE, ROCK	0	0	0	0	0	0	0	ASPHALT, ROCK, TAR

Lab Supervisor Signature and Date _____ 7 / 17 / 24

Signature of Analyst _____

Note: 0%: No Asbestos Detected; <1%: Asbestos Detected Above 0% and Below or Equal to 1%
NA: Not Applicable. ""Quantification done by optical estimate"" 1 - 5 % considered non-quantifiable.
This report relates to only the material tested. An asterisk '*' indicates preliminary results
The laboratory is not responsible for samples and data collected by personnel who are not part of the laboratory.

This report is not used by LAUSD to claim product endorsement by NVLAP
or any agency of the U.S. Government.
This report may not be reproduced except in its entirety.

LOS ANGELES UNIFIED SCHOOL DISTRICT
FACILITIES SERVICES DIVISION
CHAIN-OF-CUSTODY FOR BULK ANALYSIS

52306

SITE NAME: Bassett Elementary School CODE: 2323 PROJECT DESC: Investigate structure for Chairlift Installation by the stage COLIN #:

SAMPLED BY: Jennie Tran/Raymundo Ramos DATE SAMPLED: 12/21/2023 DEPT. / CONSULTANT: FETU TEL: 213.745.1450

Fill in all information legibly and precisely. Original must be submitted with the samples. Make a copy before submitting samples. Results and a copy of the Chain of Custody (COC) with sample numbers will be submitted to FETU when analysis is completed. ***USE BLACK/BLUE INK ONLY. DO NOT USE WHITE OUT! ALL RUSH ANALYSIS AND POINT COUNT REQUESTS MUST BE APPROVED BY FETU SUPERVISORS.***

LAB NUMBER	SAMPLE NUMBER	BUILDING NUMBER	BUILDING NAME	ROOM NUMBER AND/OR NAME	LOCATION IN ROOM	MATERIAL TYPE (DESCRIBE)	FRIABLE (YES or NO)
2312-1695	01	002 DAN	Multipurpose Bldg	Storage #1	N/W	12"x12" straight hole ceiling tile w/ brown mastic	NO
2312-1696	02	002 DAN	Multipurpose Bldg	Storage #1	N/E	12"x12" straight hole ceiling tile w/ brown mastic	NO
2312-1697	03	002 DAN	Multipurpose Bldg	Storage #2	S/E	12"x12" straight hole ceiling tile w/ brown mastic	NO
2312-1698	04	002 DAN	Multipurpose Bldg	Storage #1	North	12"x12" dark green floor tile w/ mastic on concrete	NO
2312-1699	05	002 DAN	Multipurpose Bldg	Storage #2	East	12"x12" dark green floor tile w/ mastic on concrete	NO
2312-1700	06	002 DAN	Multipurpose Bldg	Faculty Dining	West	12"x12" dark green floor tile w/ mastic on concrete	NO
2312-1701	07	002 DAN	Multipurpose Bldg	Storage # 1	North	12"x12" light green floor tile w/ mastic on concrete	NO
2312-1702	08	002 DAN	Multipurpose Bldg	Storage #2	East	12"x12" light green floor tile w/ mastic on concrete	NO
2312-1703	09	002 DAN	Multipurpose Bldg	Faculty Dining	West	12"x12" light green floor tile w/ mastic on concrete	NO
2312-1704	10	002 DAN	Multipurpose Bldg	Fan Room # 1	West	Red fire-stop caulking	NO
2312-1705	11	002 DAN	Multipurpose Bldg	Fan Room # 1	N/W	Red fire-stop caulking	NO
2312-1706	12	002 DAN	Multipurpose Bldg	Fan Room # 2	N/E	Red fire-stop caulking	NO

	NAME (PRINT & SIGN)	DEPT /AREA/CONSULTANT	# OF SAMPLES	DATE	TIME
Relinquished By	Jennie Tran	FETU	12	12/22/2023	12:35pm
Received By	Raymundo Cortez / [illegible]	FSD Lab	12	12/22/23	12:35Pm
Relinquished By					
Received By					

Maximo Work Order Number: 37423545 Project Type: ☐ Maintenance (MA) ☐ Deferred Maintenance ☑ Bond (specify: K,R,Y,Q) ☐ Other:

FETU USE ONLY

FETU REVIEWED BY: [signature] RUSH? ☐ Yes ☒ No APPROVAL:

FETU REVIEW DATE: 12/22/23 POINT COUNT? ☐ Yes ☐ No PT. CT. RUSH? ☐ Yes ☐ No APPROVAL:

BASSETT ELEMENTARY SCHOOL (2323)

Multipurpose Building (002DAN)

→ N

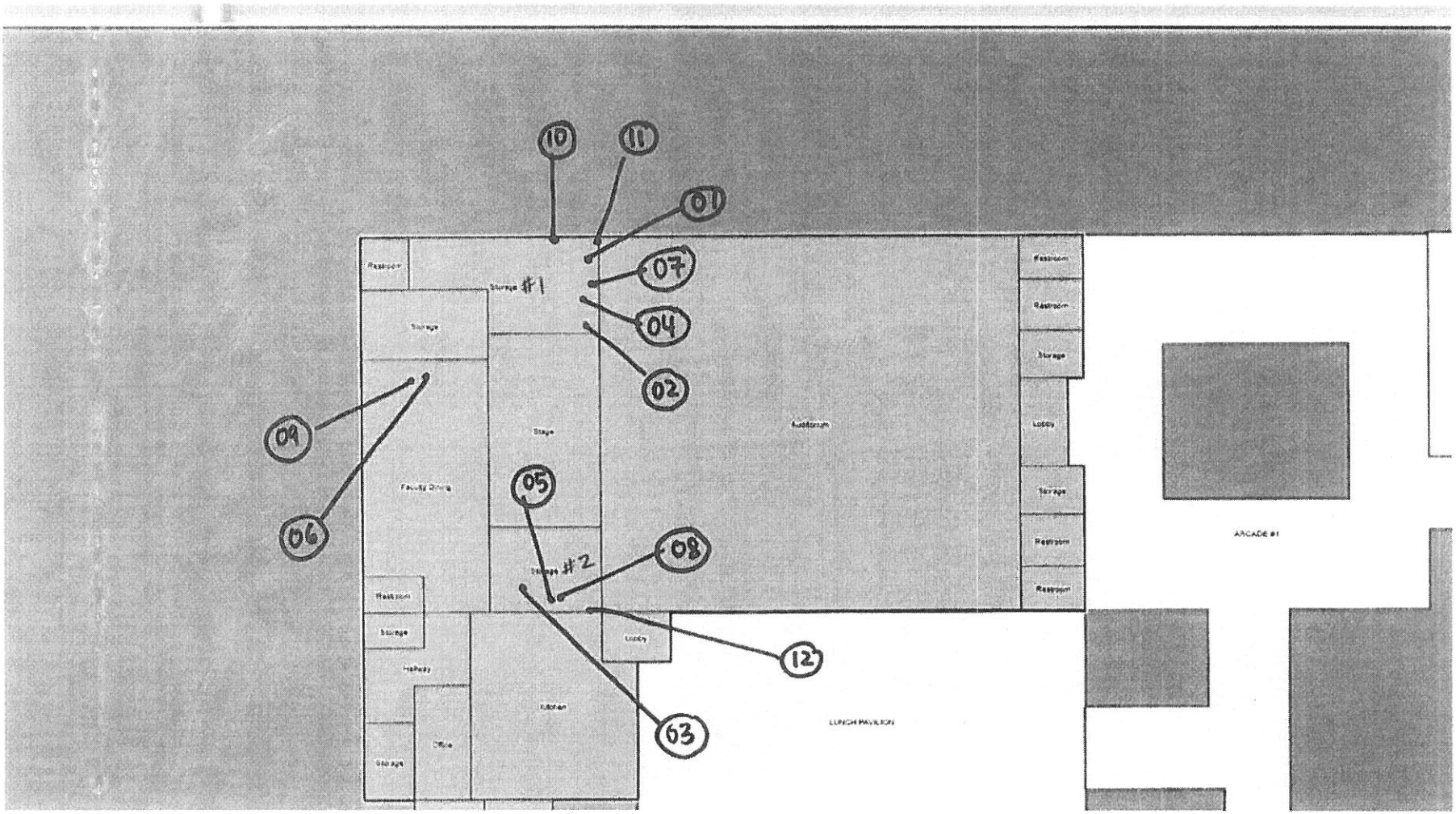

Sampled date : 12/21/23

#01-03 : 12"x12" straight hole ceiling tile w/mastic

#04-06 : 12"x12" dark green floor tile w/ mastic on concrete (mixed pattern)

#07-09 : 12"x12" light green floor tile w/ mastic on concrete (mixed pattern)

#10-12 : Red fire-stop caulking (Fan Rooms)

Los Angeles Unified School District
Facilities Services Division Laboratory
1449 S. San Pedro St.
Los Angeles, CA 90015
(213)745-1138

Asbestos Bulk Sample Analysis Laboratory Report

Laboratory Report

BASSETT ST ELEM

2323

NVLAP (TESTING) LAB# 101505-0
Method EPA/600/R-93/116(MOD) July 1993
Date Received: 12/22/2023

LAUSD Lab#	MIC	Date Analyzed	BUILDING/AREA SAMPLED	MATERIAL DESCRIPTION	CHR %	AM %	CROC %	TREM %	ACT %	ANTH %	TOTAL %	MATERIAL BACKGROUND
2023121695-A	VP	12/26/2023	002DAN : MULTIPURPOSE BLDG STORAGE #1 N/W	HOMOGENEOUS; NON-FRIABLE; WHITE; PAINT; PAINT MATERIAL	0	0	0	0	0	0	0	PAINT
2023121695-B	VP	12/26/2023	002DAN : MULTIPURPOSE BLDG STORAGE #1 N/W	HOMOGENEOUS; NON-FRIABLE; LITE BROWN; CEILING TILE; FIBROUS	0	0	0	0	0	0	0	100% CELLULOSE
2023121695-C	VP	12/26/2023	002DAN : MULTIPURPOSE BLDG STORAGE #1 N/W	HOMOGENEOUS; NON-FRIABLE; BROWN; ADHESIVE; RESIN-LIKE	0	0	0	0	0	0	0	ADHESIVE
2023121696-A	VP	12/26/2023	002DAN : MULTIPURPOSE BLDG STORAGE #1 N/E	HOMOGENEOUS; NON-FRIABLE; WHITE; PAINT; PAINT MATERIAL	0	0	0	0	0	0	0	PAINT
2023121696-B	VP	12/26/2023	002DAN : MULTIPURPOSE BLDG STORAGE #1 N/E	HOMOGENEOUS; NON-FRIABLE; LITE BROWN; CEILING TILE; FIBROUS	0	0	0	0	0	0	0	100% CELLULOSE
2023121696-C	VP	12/26/2023	002DAN : MULTIPURPOSE BLDG STORAGE #1 N/E	HOMOGENEOUS; NON-FRIABLE; BROWN; ADHESIVE; RESIN-LIKE	0	0	0	0	0	0	0	ADHESIVE
2023121697-A	VP	12/26/2023	002DAN : MULTIPURPOSE BLDG STORAGE #2 S/E	HOMOGENEOUS; NON-FRIABLE; WHITE; PAINT; PAINT MATERIAL	0	0	0	0	0	0	0	PAINT

Lab Supervisor Signature and Date for MA 12/27/23

Signature of Analyst

Note: 0% - No Asbestos Detected, <1% - Asbestos Detected Above 0% and Below or Equal to 1%
NA - Not Applicable "Quantification done by optical estimate" 1 - 5 % considered non-quantifiable
This report relates to only the material tested. An asterisk '*' indicates preliminary results.
The laboratory is not responsible for samples and data collected by personnel who are not part of the laboratory.

This report is not used by LAUSD to claim product endorsement by NVLAP or any agency of the U.S. Government.
This report may not be reproduced except in its entirety.

Los Angeles Unified School District
Facilities Services Division Laboratory
1449 S. San Pedro St.
Los Angeles, CA 90015
(213)745-1138

Asbestos Bulk Sample Analysis Laboratory Report

Laboratory Report

BASSETT ST ELEM

2323

NVLAP (TESTING) LAB# 101505-0
Method EPA/600/R-93/116(MOD) July 1993
Date Received: 12/22/2023

LAUSD Lab#	MIC	Date Analyzed	BUILDING/AREA SAMPLED	MATERIAL DESCRIPTION	CHR %	AM %	CROC %	TREM %	ACT %	ANTH %	TOTAL %	MATERIAL BACKGROUND
2023121697-B	VP	12/26/2023	002DAN : MULTIPURPOSE BLDG STORAGE #2 S/E	HOMOGENEOUS; NON-FRIABLE; LITE BROWN; CEILING TILE; FIBROUS	0	0	0	0	0	0	0	100% CELLULOSE
2023121697-C	VP	12/26/2023	002DAN : MULTIPURPOSE BLDG STORAGE #2 S/E	HOMOGENEOUS; NON-FRIABLE; BROWN; ADHESIVE; RESIN-LIKE	0	0	0	0	0	0	0	ADHESIVE
2023121697-D	VP	12/26/2023	002DAN : MULTIPURPOSE BLDG STORAGE #2 S/E	HOMOGENEOUS; NON-FRIABLE; LT.GRAY; PLASTER; GRANULAR	0	0	0	0	0	0	0	MINERAL FILLER, ROCK
2023121698-A	VP	12/26/2023	002DAN : MULTIPURPOSE BLDG STORAGE #1 NORTH	HOMOGENEOUS; NON-FRIABLE; GREEN; FLOOR TILE; VINYL	0	0	0	0	0	0	0	BINDER, CARBONATES
2023121698-B	VP	12/26/2023	002DAN : MULTIPURPOSE BLDG STORAGE #1 NORTH	HOMOGENEOUS; NON-FRIABLE; BLACK; MASTIC; TAR	0	0	0	0	0	0	0	TAR
2023121699-A	VP	12/26/2023	002DAN : MULTIPURPOSE BLDG STORAGE #2 EAST	HOMOGENEOUS; NON-FRIABLE; GREEN; FLOOR TILE; VINYL	0	0	0	0	0	0	0	BINDER, CARBONATES
					COMMENT(S): DIFFERENT THAN 2312/1698 & 1700							
2023121699-B	VP	12/26/2023	002DAN : MULTIPURPOSE BLDG STORAGE #2 EAST	HOMOGENEOUS; NON-FRIABLE; BLACK; MASTIC; TAR	2	0	0	0	0	0	2	TAR

Lab Supervisor Signature and Date 12/27/23

Signature of Analyst

Note: 0% No Asbestos Detected. <1% Asbestos Detected Above 0% and Below or Equal to 1%
NA Not Applicable "Quantification done by optical estimate" 1 - 5 % considered non-quantifiable
This report relates to only the material tested. An asterisk "*" indicates preliminary results
The laboratory is not responsible for samples and data collected by personnel who are not part of the laboratory

This report is not used by LAUSD to claim product endorsement by NVLAP or any agency of the U.S. Government
This report may not be reproduced except in its entirety

Los Angeles Unified School District
Facilities Services Division Laboratory
1449 S. San Pedro St.
Los Angeles, CA 90015
(213)745-1138

Asbestos Bulk Sample Analysis Laboratory Report

Laboratory Report

BASSETT ST ELEM

2323

NVLAP (TESTING) LAB# 101505-0
Method EPA/600/R-93/116(MOD) July 1993
Date Received: 12/22/2023

LAUSD Lab#	MIC	Date Analyzed	BUILDING/AREA SAMPLED	MATERIAL DESCRIPTION	CHR %	AM %	CROC %	TREM %	ACT %	ANTH %	TOTAL %	MATERIAL BACKGROUND
2023121700-A	VP	12/26/2023	002DAN : MULTIPURPOSE BLDG FACULTY DINING WEST	HOMOGENEOUS; NON-FRIABLE; GREEN; FLOOR TILE; VINYL	0	0	0	0	0	0	0	BINDER, CARBONATES
2023121700-B	VP	12/26/2023	002DAN : MULTIPURPOSE BLDG FACULTY DINING WEST	HOMOGENEOUS; NON-FRIABLE; BLACK; MASTIC; TAR	0	0	0	0	0	0	0	TAR
2023121701-A	VP	12/26/2023	002DAN : MULTIPURPOSE BLDG STORAGE #1 NORTH	HOMOGENEOUS; NON-FRIABLE; BLUE GREEN; FLOOR TILE; VINYL	0	0	0	0	0	0	0	BINDER, CARBONATES
				COMMENT(S): DIFFERENT THAN 2312/1702 & 1703								
2023121701-B	VP	12/26/2023	002DAN : MULTIPURPOSE BLDG STORAGE #1 NORTH	HOMOGENEOUS; NON-FRIABLE; BLACK; MASTIC; TAR	0	0	0	0	0	0	0	TAR
2023121702-A	VP	12/26/2023	002DAN : MULTIPURPOSE BLDG STORAGE #2 EAST	HOMOGENEOUS; NON-FRIABLE; BLUE GREEN; FLOOR TILE; VINYL	0	0	0	0	0	0	0	BINDER, CARBONATES
2023121702-B	VP	12/26/2023	002DAN : MULTIPURPOSE BLDG STORAGE #2 EAST	HOMOGENEOUS; NON-FRIABLE; BLACK; MASTIC; TAR	2	0	0	0	0	0	2	TAR
2023121703-A	VP	12/26/2023	002DAN : MULTIPURPOSE BLDG FACULTY DINING WEST	HOMOGENEOUS; NON-FRIABLE; BLUE GREEN; FLOOR TILE; VINYL	0	0	0	0	0	0	0	BINDER, CARBONATES

Lab Supervisor Signature and Date for MS 12/27/23

Signature of Analyst

Note: 0% - No Asbestos Detected, <1% - Asbestos Detected Above 0% and Below or Equal to 1%
NA - Not Applicable "Quantification done by optical estimate" 1 - 5 % considered non-quantifiable
This report relates to only the material tested. An asterisk "*" indicates preliminary results
The laboratory is not responsible for samples and data collected by personnel who are not part of the laboratory

This report is not used by LAUSD to claim product endorsement by NVLAP or any agency of the U.S. Government
This report may not be reproduced except in its entirety

Los Angeles Unified School District
Facilities Services Division Laboratory
1449 S. San Pedro St.
Los Angeles, CA 90015
(213)745-1138

Asbestos Bulk Sample Analysis Laboratory Report

Laboratory Report

BASSETT ST ELEM

2323

NVLAP (TESTING) LAB# 101505-0
Method EPA/600/R-93/116(MOD) July 1993
Date Received: 12/22/2023

LAUSD Lab#	MIC	Date Analyzed	BUILDING/AREA SAMPLED	MATERIAL DESCRIPTION	CHR %	AM %	CROC %	TREM %	ACT %	ANTH %	TOTAL %	MATERIAL BACKGROUND
2023121703-B	VP	12/26/2023	002DAN : MULTIPURPOSE BLDG FALCULTY DINING WEST	HOMOGENEOUS; NON-FRIABLE; BLACK; MASTIC; TAR	2	0	0	0	0	0	2	TAR
2023121704-A	VP	12/26/2023	002DAN : MULTIPURPOSE BLDG FAN ROOM #1 WEST	HOMOGENEOUS; NON-FRIABLE; RED; FIRE STOP; RUBBER-LIKE	0	0	0	0	0	0	0	BINDER
2023121704-B	VP	12/26/2023	002DAN : MULTIPURPOSE BLDG FAN ROOM #1 WEST	HOMOGENEOUS; NON-FRIABLE; WHITE; PLASTER; GRANULAR	0	0	0	0	0	0	0	MINERAL FILLER, ROCK
2023121704-C	VP	12/26/2023	002DAN : MULTIPURPOSE BLDG FAN ROOM #1 WEST	HOMOGENEOUS; NON-FRIABLE; LT.GRAY; PLASTER; GRANULAR	0	0	0	0	0	0	0	MINERAL FILLER, ROCK
					COMMENT(S): SMALL AMOUNT OF MATERIAL							
2023121705-A	VP	12/26/2023	002DAN : MULTIPURPOSE BLDG FAN ROOM #1 N/W	HOMOGENEOUS; NON-FRIABLE; RED; FIRE STOP; RUBBER-LIKE	0	0	0	0	0	0	0	BINDER
2023121705-B	VP	12/26/2023	002DAN : MULTIPURPOSE BLDG FAN ROOM #1 N/W	HOMOGENEOUS; NON-FRIABLE; WHITE; PLASTER; GRANULAR	0	0	0	0	0	0	0	MINERAL FILLER, ROCK
					COMMENT(S): SMALL AMOUNT OF MATEIRAL							
2023121706	VP	12/26/2023	002DAN : MULTIPURPOSE BLDG FAN ROOM #2 N/E	HOMOGENEOUS; NON-FRIABLE; RED; FIRE STOP; RUBBER-LIKE	0	0	0	0	0	0	0	BINDER

Lab Supervisor Signature and Date: for MS 12/27/23

Signature of Analyst:

Note: 0% No Asbestos Detected, <1% Asbestos Detected Above 0% and Below or Equal to 1%
NA Not Applicable "Quantification done by optical estimate" 1 - 5% considered non-quantifiable
This report relates to only the material tested. An asterisk "*" indicates preliminary results
The laboratory is not responsible for samples and data collected by personnel who are not part of the laboratory

This report is not used by LAUSD to claim product endorsement by NVLAP or any agency of the U.S. Government
This report may not be reproduced except in its entirety

4945

JD
SEP 1 1 2023

LOS ANGELES UNIFIE CHOOL DISTRICT
FACILITIES SERVICES DIVISION
CHAIN-OF-CUSTODY FOR BULK ANALYSIS

SITE NAME: BASSETT ES CODE: 2323 PROJECT DESC Water Percolation Boring Locations COLIN #:

SAMPLED BY: MICHAEL QUILINO DATE SAMPLED: 12/19/2022 DEPT. / CONSULTANT: FETU TEL: 2137451450

Fill in all information legibly and precisely. Original must be submitted with the samples. Make a copy before submitting samples. Results and a copy of the Chain of Custody (COC) with sample numbers will be submitted to FETU when analysis is completed. ***USE BLACK/BLUE INK ONLY. DO NOT USE WHITE OUT! ALL RUSH ANALYSIS AND POINT COUNT REQUESTS MUST BE APPROVED BY FETU SUPERVISORS.***

LAB NUMBER	SAMPLE NUMBER	BUILDING NUMBER	BUILDING NAME	ROOM NUMBER AND/OR NAME	LOCATION IN ROOM	MATERIAL TYPE (DESCRIBE)	FRIABLE (YES or NO)
2212-0696	01	G-2323	GROUNDS	AREA #1	NORTH	ASPHALT PAVING (CORE)	NO
2212-0697	02	G-2323	GROUNDS	AREA #1	EAST	ASPHALT PAVING (CORE)	NO
2212-0698	03	G-2323	GROUNDS	AREA #1	SOUTH	ASPHALT PAVING (CORE)	NO
2212-0699	04	G-2323	GROUNDS	AREA #2	NORTH	ASPHALT PAVING (CORE)	NO
2212-0700	05	G-2323	GROUNDS	AREA #2	CENTER	ASPHALT PAVING (CORE)	NO
2212-0701	06	G-2323	GROUNDS	AREA #2	SOUTH	ASPHALT PAVING (CORE)	NO
2212-0702	07	G-2323	GROUNDS	AREA #3	NORTH	ASPHALT PAVING (CORE)	NO
2212-0703	08	G-2323	GROUNDS	AREA #3	SOUTHWEST	ASPHALT PAVING (CORE)	NO
2212-0704	09	G-2323	GROUNDS	AREA #3	SOUTHEAST	ASPHALT PAVING (CORE)	NO

	NAME (PRINT & SIGN)	DEPT./AREA/CONSULTANT	# OF SAMPLES	DATE	TIME
Relinquished By:	M. Quilino / M	FETU	9	12-19-22	3:35p
Received By:	CAR/KS	FSD VAR	9	12/19/22	3:25p
Relinquished By:					
Received By:					

Maximo Work Order Number: 50151975 Project Type: ☐ Maintenance (MA) ☐ Deferred Maintenance ☐ Bond (specify: K,R,Y,Q) ☐ Other:

FETU USE ONLY

FETU REVIEWED BY: IVIN Salazar

FETU REVIEW DATE: 12/19/22

RUSH? ☒ Yes ☐ No APPROVAL:

POINT COUNT? ☐ Yes ☐ No PT. CT. RUSH? ☐ Yes ☐ No APPROVAL:

Los Angel[illegible] [illegible]ied School District
Facilities Services Division Laboratory
1449 S. San Pedro St.
Los Angeles, CA 90015
(213)745-1138

Asbestos Bulk San[illegible]nalysis Laboratory Report
Laboratory Report
BASSETT ST ELEM
2323

NVLAP (TESTING) L[illegible]01505-0
Method EPA/600/R-93/116(MOD) July 1993
Date Received: 12/19/2022

LAUSD Lab#	MIC	Date Analyzed	BUILDING/AREA SAMPLED	MATERIAL DESCRIPTION	CHR %	AM %	CROC %	TREM %	ACT %	ANTH %	TOTAL %	MATERIAL BACKGROUND
2022120696	RC	12/20/2022	G-2323 : GROUNDS AREA #1 NORTH	HOMOGENEOUS; NON-FRIABLE; BLACK; ASPHALT; TARLIKE, ROCK	0	0	0	0	0	0	0	ASPHALT, ROCK, TAR
2022120697	RC	12/20/2022	G-2323 : GROUNDS AREA #1 EAST	HOMOGENEOUS; NON-FRIABLE; BLACK; ASPHALT; TARLIKE, ROCK	0	0	0	0	0	0	0	ASPHALT, ROCK, TAR
2022120698	RC	12/20/2022	G-2323 : GROUNDS AREA #1 SOUTH	HOMOGENEOUS; NON-FRIABLE; BLACK; ASPHALT; TARLIKE, ROCK	0	0	0	0	0	0	0	ASPHALT, ROCK, TAR
2022120699	RC	12/20/2022	G-2323 : GROUNDS AREA #2 NORTH	HOMOGENEOUS; NON-FRIABLE; BLACK; ASPHALT; TARLIKE, ROCK	0	0	0	0	0	0	0	ASPHALT, ROCK, TAR
2022120700	RC	12/20/2022	G-2323 : GROUNDS AREA #2 CENTER	HOMOGENEOUS; NON-FRIABLE; BLACK; ASPHALT; TARLIKE, ROCK	0	0	0	0	0	0	0	ASPHALT, ROCK, TAR
2022120701	RC	12/20/2022	G-2323 : GROUNDS AREA #2 SOUTH	HOMOGENEOUS; NON-FRIABLE; BLACK; ASPHALT; TARLIKE, ROCK	0	0	0	0	0	0	0	ASPHALT, ROCK, TAR
2022120702	RC	12/20/2022	G-2323 : GROUNDS AREA #3 NORTH	HOMOGENEOUS; NON-FRIABLE; BLACK; ASPHALT; TARLIKE, ROCK	0	0	0	0	0	0	0	ASPHALT, ROCK, TAR

Lab Supervisor Signature and Date _____ 12 / 20 / 22

Signature of Analyst _____

Note: 0%: No Asbestos Detected; <1%: Asbestos Detected Above 0% and Below or Equal to 1%
NA: Not Applicable. ""Quantification done by optical estimate"" 1 - 5 % considered non-quantifiable.
This report relates to only the material tested. An asterisk '*' indicates preliminary results.
The laboratory is not responsible for samples and data collected by personnel who are not part of the laboratory.

This report is not used by LAUSD to claim product endorsement by NVLAP or any agency of the U.S. Government.
This report may not be reproduced except in its entirety.

Los Angel[illegible]ied School District
Facilities Services Division Laboratory
1449 S. San Pedro St.
Los Angeles, CA 90015
(213)745-1138

Asbestos Bulk San[illegible]nalysis Laboratory Report
Laboratory Report
BASSETT ST ELEM
2323

NVLAP (TESTING) 1[illegible]101505-0
Method EPA/600/R-93/116(MOD) July 1993
Date Received: 12/19/2022

LAUSD Lab#	MIC	Date Analyzed	BUILDING/AREA SAMPLED	MATERIAL DESCRIPTION	CHR %	AM %	CROC %	TREM %	ACT %	ANTH %	TOTAL %	MATERIAL BACKGROUND
2022120703	RC	12/20/2022	G-2323 : GROUNDS AREA #3 SOUTHWEST	HOMOGENEOUS; NON-FRIABLE; BLACK; ASPHALT; TARLIKE, ROCK	0	0	0	0	0	0	0	ASPHALT, ROCK, TAR
2022120704	RC	12/20/2022	G-2323 : GROUNDS AREA #3 SOUTHEAST	HOMOGENEOUS; NON-FRIABLE; BLACK; ASPHALT; TARLIKE, ROCK	0	0	0	0	0	0	0	ASPHALT, ROCK, TAR

Lab Supervisor Signature and Date _____ 12 / 20 / 22

Signature of Analyst _____

Note: 0%: No Asbestos Detected; <1%: Asbestos Detected Above 0% and Below or Equal to 1%
NA: Not Applicable. ""Quantification done by optical estimate"" 1 - 5 % considered non-quantifiable.
This report relates to only the material tested. An asterisk '*' indicates preliminary results.
The laboratory is not responsible for samples and data collected by personnel who are not part of the laboratory.

This report is not used by LAUSD to claim product endorsement by NVLAP or any agency of the U.S. Government.
This report may not be reproduced except in its entirety.

BASSETT E.S. (2323)
WATER PERCOLATION & BORING LOCATIONS
ASPHALT SAMPLE LOCATIONS
FETM
M. QUILIND
12-19-22

#01-09
ASPHALT PAVING (CORE)

AREA #1

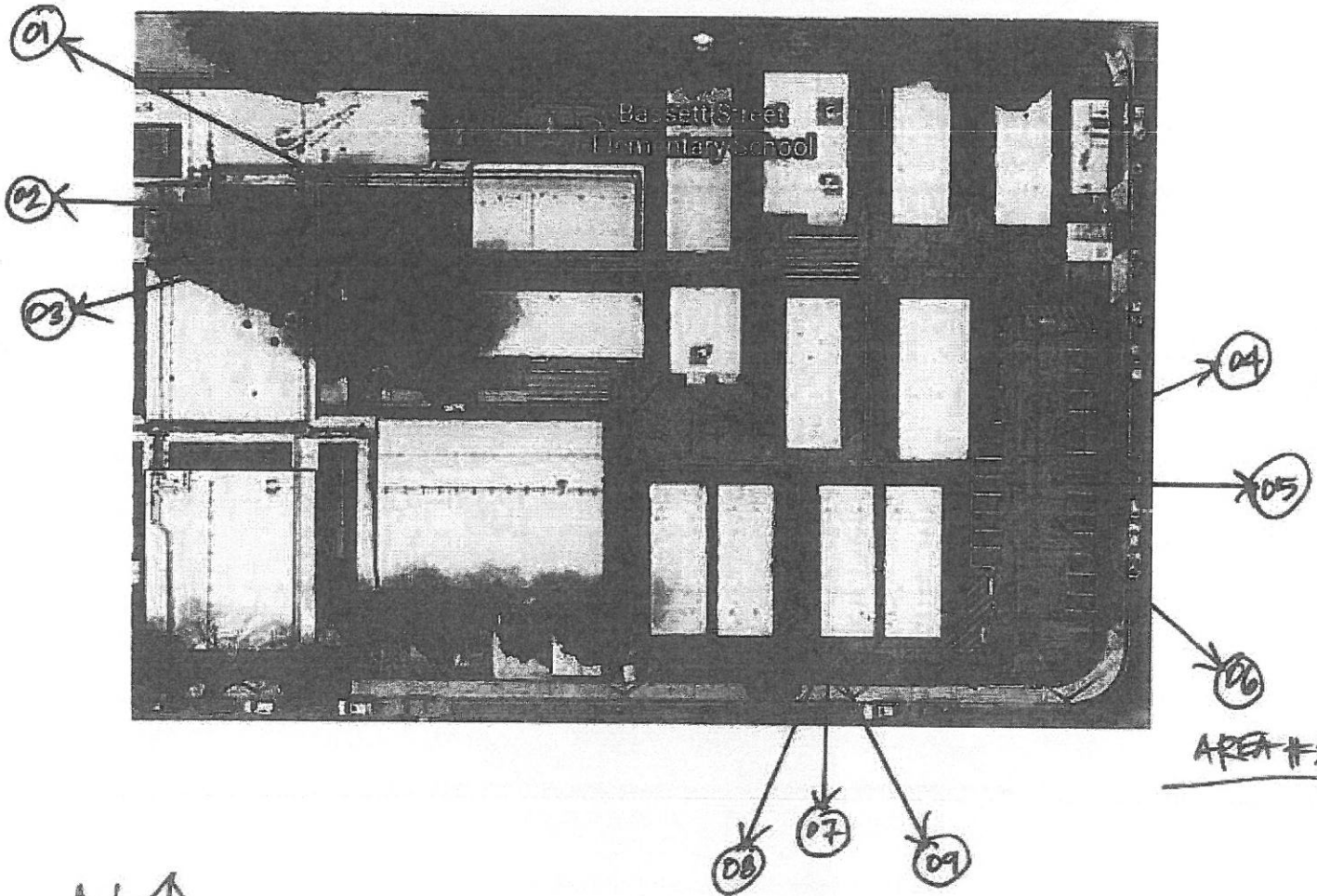

AREA #2

AREA #3

N ↑

LOS ANGELES UNIFIED SCHOOL DISTRICT

FACILITIES SERVICES DIVISION
CHAIN-OF-CUSTODY FOR BULK ANALYSIS

JD SEP 11 2023 48207

SITE NAME: Bassett Elementary School CODE: 2323 PROJECT DESC: Crack Fill Project COLIN #: N/A

SAMPLED BY: Samuel M. / Jennie T. DATE SAMPLED: 5/16/2022 DEPT. / CONSULTANT: FETU TEL: 213-745-1450

Fill in all information legibly and precisely. Original must be submitted with the samples. Make a copy before submitting samples. Results and a copy of the Chain of Custody (COC) with sample numbers will be submitted to FETU when analysis is completed. ***USE BLACK/BLUE INK ONLY. DO NOT USE WHITE OUT! ALL RUSH ANALYSIS AND POINT COUNT REQUESTS MUST BE APPROVED BY FETU SUPERVISORS.***

LAB NUMBER	SAMPLE NUMBER	BUILDING NUMBER	BUILDING NAME	ROOM NUMBER AND/OR NAME	LOCATION IN ROOM	MATERIAL TYPE (DESCRIBE)	FRIABLE (YES or NO)
2205-1309	25	G-2323	Grounds	Area 7	Center	Asphalt Paving (cored)	NO
2205-1310	26	G-2323	Grounds	Area 7	Center	Asphalt Paving (cored)	NO
2205-1311	27	G-2323	Grounds	Area 7	Southeast	Asphalt Paving (cored)	NO
2205-1312	28	G-2323	Grounds	Area 7	(patch) - South	Asphalt Paving (cored)	NO
2205-1313	29	G-2323	Grounds	Area 7	(patch) - Northwest	Asphalt Paving (cored)	NO
2205-1314	30	G-2323	Grounds	Area 7	(patch) - East	Asphalt Paving (cored)	NO
2205-1315	31	G-2323	Grounds	Area 6	East	Asphalt Paving (cored)	NO
2205-1316	32	G-2323	Grounds	Area 6	Center	Asphalt Paving (cored)	NO
2205-1317	33	G-2323	Grounds	Area 6	South	Asphalt Paving (cored)	NO
2205-1318	34	G-2323	Grounds	Area 6	North	Asphalt Paving (cored)	NO
2205-1319	35	G-2323	Grounds	Area 6	Center	Asphalt Paving (cored)	NO
2205-1320	36	G-2323	Grounds	Area 6	Northwest	Asphalt Paving (cored)	NO

DATE:	TIME:	NAME (PRINT & SIGN):	DEPARTMENT / AREA / CONSULTANT:	# OF SAMPLES
5/20/22	9:00	Jennie Tran	FETU	12
5/24/22	11:25	Farouqh Hassani / F. H.	FETU	13
5/24/22	11:25	S. Ahmad / S. Ahmad	F&D LABS	12

Maximo Work Order Number: 33018745 Project Type: ☑ Maintenance (MA) ☐ Deferred Maintenance ☐ Bond (specify) ☐ Other:

FETU USE ONLY

FETU REVIEWED BY: F. H. RUSH? ☐ Yes ☐ No APPROVAL:

FETU REVIEW DATE: 5/24/22 POINT COUNT? ☐ Yes ☐ No PT. CT. RUSH? ☐ Yes ☐ No APPROVAL:

Los Angeles Unified School District
Facilities Servi[illegible] [illegible]vision Laboratory
1449 S. San Pedro St.
Los Angeles, CA 90015
(213)745-1138

Asbestos Bulk Sample Analysis Laboratory Report

L[illegible]tory Report

BAS[illegible]TT ST ELEM

2323

NVLAP (TESTING) LAB# 101505-0
Method EPA/600/R-9[illegible] (MOD) July 1993
Date [illegible]ceived: 05/24/2022

LAUSD Lab#	MIC	Date Analyzed	BUILDING/AREA SAMPLED	MATERIAL DESCRIPTION	CHR %	AM %	CROC %	TREM %	ACT %	ANTH %	TOTAL %	MATERIAL BACKGROUND
2022051309	AC	06/03/2022	G-2323 : GROUNDS AREA 7 CENTER	HOMOGENEOUS; NON-FRIABLE; BLACK; ASPHALT; TARLIKE, ROCK	0	0	0	0	0	0	0	ASPHALT, ROCK, TAR
2022051310	AC	06/03/2022	G-2323 : GROUNDS AREA 7 CENTER	HOMOGENEOUS; NON-FRIABLE; BLACK; ASPHALT; TARLIKE, ROCK	0	0	0	0	0	0	0	ASPHALT, ROCK, TAR
2022051311	AC	06/03/2022	G-2323 : GROUNDS AREA 7 SE	HOMOGENEOUS; NON-FRIABLE; BLACK; ASPHALT; TARLIKE, ROCK	0	0	0	0	0	0	0	ASPHALT, ROCK, TAR
2022051312	AC	06/03/2022	G-2323 : GROUNDS AREA 7 (PATCH) - SOUTH	HOMOGENEOUS; NON-FRIABLE; BLACK; ASPHALT; TARLIKE, ROCK	0	0	0	0	0	0	0	ASPHALT, ROCK, TAR
2022051313	AC	06/03/2022	G-2323 : GROUNDS AREA 7 (PATCH) - NORTHWEST	HOMOGENEOUS; NON-FRIABLE; BLACK; ASPHALT; TARLIKE, ROCK	0	0	0	0	0	0	0	ASPHALT, ROCK, TAR
2022051314	AC	06/03/2022	G-2323 : GROUNDS AREA 7 (PATCH) - EAST	HOMOGENEOUS; NON-FRIABLE; BLACK; ASPHALT; TARLIKE, ROCK	0	0	0	0	0	0	0	ASPHALT, ROCK, TAR
2022051315	AC	06/03/2022	G-2323 : GROUNDS AREA 6 EAST	HOMOGENEOUS; NON-FRIABLE; BLACK; ASPHALT; TARLIKE, ROCK	0	0	0	0	0	0	0	ASPHALT, ROCK, TAR

Lab Supervisor Signature and Date _____ 6 / 6 / 22

Signature of Analyst _____

Note: 0% No Asbestos Detected, <1% Asbestos Detected Above 0% and Below or Equal to 1%
NA Not Applicable "Quantification done by optical estimate" 1 - 5 % considered non-quantifiable.
This report relates to only the material tested. An asterisk "*" indicates preliminary results.
The laboratory is not responsible for samples and data collected by personnel who are not part of the laboratory.

This report is not used by LAUSD to claim product endorsement by NVLAP or any agency of the U.S. Government.
This report may not be reproduced except in its entirety.

Los Angeles Unified School District
Facilities Servi ivision Laboratory
1449 S. San Pe st.
Los Angeles, CA 90015
(213)745-1138

Asbestos Bulk Sample Analysis Laboratory Report
L tory Report
BA ETT ST ELEM
2323

NVLAP (TESTING) LAB# 101505-0
Method EPA/600/R-9 (MOD) July 1993
Date eived: 05/24/2022

LAUSD Lab#	MIC	Date Analyzed	BUILDING/AREA SAMPLED	MATERIAL DESCRIPTION	CHR %	AM %	CROC %	TREM %	ACT %	ANTH %	TOTAL %	MATERIAL BACKGROUND
2022051316	AC	06/03/2022	G-2323 : GROUNDS AREA 6 CENTER	HOMOGENEOUS; NON-FRIABLE; BLACK; ASPHALT; TARLIKE, ROCK	0	0	0	0	0	0	0	ASPHALT, ROCK, TAR
2022051317	AC	06/03/2022	G-2323 : GROUNDS AREA 6 SOUTH	HOMOGENEOUS; NON-FRIABLE; BLACK; ASPHALT; TARLIKE, ROCK	0	0	0	0	0	0	0	ASPHALT, ROCK, TAR
2022051318	AC	06/03/2022	G-2323 : GROUNDS AREA 6 NORTH	HOMOGENEOUS; NON-FRIABLE; BLACK; ASPHALT; TARLIKE, ROCK	0	0	0	0	0	0	0	ASPHALT, ROCK, TAR
2022051319	AC	06/03/2022	G-2323 : GROUNDS AREA 6 CENTER	HOMOGENEOUS; NON-FRIABLE; BLACK; ASPHALT; TARLIKE, ROCK	0	0	0	0	0	0	0	ASPHALT, ROCK, TAR
2022051320	AC	06/03/2022	G-2323 : GROUNDS AREA 6 NW	HOMOGENEOUS; NON-FRIABLE; BLACK; ASPHALT; TARLIKE, ROCK	0	0	0	0	0	0	0	ASPHALT, ROCK, TAR

Lab Supervisor Signature and Date _____ 6 / 6 / 22

Signature of Analyst _____

Note: 0%: No Asbestos Detected, <1%: Asbestos Detected Above 0% and Below or Equal to 1%
NA: Not Applicable. ""Quantification done by optical estimate"" 1 - 5 % considered non-quantifiable.
This report relates to only the material tested. An asterisk '*' indicates preliminary results.
The laboratory is not responsible for samples and data collected by personnel who are not part of the laboratory

This report is not used by LAUSD to claim product endorsement by NVLAP or any agency of the U.S. Government.
This report may not be reproduced except in its entirety

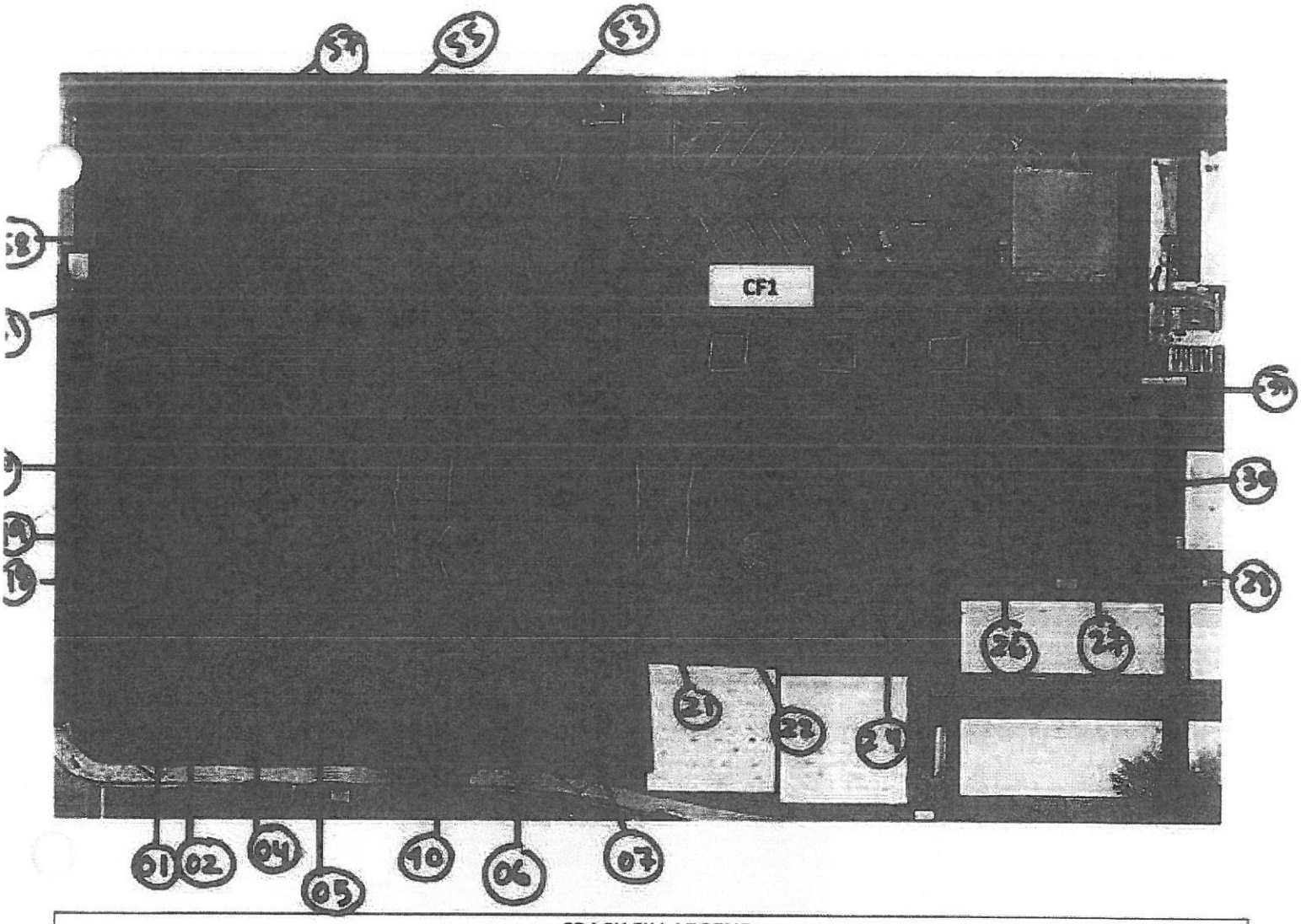

CRACK FILL LEGEND							
CF 1	2,500 LF						
					TOTAL LINEAL FEET		2,500 LINEAL FEET

Date: 5/16/22 Asphalt Paving (cored)

N ↑

A1 # 01 _ 07
A1 # 08 _ 10 (Patch)

A2 # 11 - 17
A2 # 18 - 20 (Patch)

A3 # 38 - 44

A4 # 45 - 51

A5 # 52 - 58

A7 # 21 _ 27
A7 # 28 - 30 (Patch)

A6 # 31 - 37

BASSETT ES
15756 Bassett Street, Lake Balboa, 91406

LOS ANGELES UNIFIED SCHOOL DISTRICT

OFFICE OF ENVIRONMENTAL HEALTH AND SAFETY
CHAIN-OF-CUSTODY FOR BULK ANALYSIS

25106

SITE NAME: BASSETT ST ES CODE: 2323 PROJECT: REPLACE DETERIORATED FLOORING

SAMPLED BY: JESUS C CARBAJAL DATE SAMPLED: 1/11/2007 DEPT. / CONSULTANT: ATU TEL. NO: (213)745-1450

Fill in all information legibly and precisely. Sampler should make a copy before submitting samples to the lab. **USE BLACK/BLUE INK ONLY**
Original to OEHS lab with samples. Results and a copy of the Chain of Custody with sample numbers will be submitted to ATU when completed.

LAB NUMBER	SAMPLE NUMBER	BUILDING NUMBER	BUILDING NAME	ROOM NUMBER AND/OR NAME	LOCATION IN ROOM	MATERIAL TYPE (DESCRIBE)	FRIABLE (CIRCLE ONE)
0701-0869	1	003DAN	BUILDING "A"	ROOM 36	NORTH - WEST	12" X 12" LT. BROWN FLOOR TILE W/ ADHESIVE	YES / NO
0701-0870	2	003DAN	BUILDING "A"	ROOM 36	SOUTH - WEST	12" X 12" LT. BROWN FLOOR TILE W/ ADHESIVE	YES / NO
0701-0871	3	003DAN	BUILDING "A"	ROOM 36	NORTH - EAST	12" X 12" LT. BROWN FLOOR TILE W/ ADHESIVE	YES / NO
0701-0872	4	003DAN	BUILDING "A"	ROOM 35	SOUTH - EAST	12" X 12" LT. BROWN FLOOR TILE W/ ADHESIVE	YES / NO
0701-0873	5	003DAN	BUILDING "A"	ROOM 35	NORTH - WEST	12" X 12" LT. BROWN FLOOR TILE W/ ADHESIVE	YES / NO
							YES / NO
							YES / NO
							YES / NO
							YES / NO
							YES / NO
							YES / NO
							YES / NO
							YES / NO

DATE:	TIME:	NAME (PRINT & SIGN):	DEPARTMENT / AREA / CONSULTANT:	NO. OF SAMPLES
1/22/2007	2:30 PM	J. CARBAJAL	ATU - 19	5
1-23-07	12:30 pm	R. Bowie	ATU - 19	5
1-23-07	12:50 P	Sema	OEHS	3

Bond Funded: Yes / No
Type of Bond:
Job Cost #:

Other Than Bond Describe
Maintenance & Operations:
Deferred Maintenance: ✓
Other:

Los Angeles Un School District
Office of Envirc ital Health and Safety
1449 S. San Pedro St.
Los Angeles, CA 90015
(213)745-1138

Asbestos Bulk ! le Analysis
Laboratc .eport

BASSETT ST ELEM
2323

NVI AB# 101505-0
Method EPA/600/R-93/1. OD) July 1993
Date Received: 01/23/2007

LAUSD Lab#	MIC	Date Analyzed	BUILDING/AREA SAMPLED	MATERIAL DESCRIPTION	CHR %	AM %	CROC %	TREM %	ACT %	ANTH %	TOTAL %	MATERIAL BACKGROUND
2007010869-A	NLI	01/25/2007	003DAN : BLD. A RM. 36 NW	NON-HOMOGENEOUS; NON-FRIABLE; LITE BROWN; FLOOR TILE; SOLID	0	0	0	0	0	0	0	2% CELLULOSE CASO, PIGMENT
2007010869-B	NLI	01/25/2007	003DAN : BLD. A RM. 36 NW	NON-HOMOGENEOUS; NON-FRIABLE; BLACK; ADHESIVE; TARLIKE	5	0	0	0	0	0	5	5% CELLULOSE DEBRIS, TAR
2007010870-A	NLI	01/25/2007	003DAN : BLD. A RM. 36 SW	NON-HOMOGENEOUS; NON-FRIABLE; LITE BROWN; FLOOR TILE; SOLID	0	0	0	0	0	0	0	2% CELLULOSE CASO, PIGMENT
2007010870-B	NLI	01/25/2007	003DAN : BLD. A RM. 36 SW	NON-HOMOGENEOUS; NON-FRIABLE; BLACK; ADHESIVE; TARLIKE	5	0	0	0	0	0	5	5% CELLULOSE DEBRIS, TAR
2007010871-A	NLI	01/25/2007	003DAN : BLD. A RM. 36 NE	NON-HOMOGENEOUS; NON-FRIABLE; LITE BROWN; FLOOR TILE; SOLID	0	0	0	0	0	0	0	2% CELLULOSE CASO, PIGMENT
2007010871-B	NLI	01/25/2007	003DAN : BLD. A RM. 36 NE	NON-HOMOGENEOUS; NON-FRIABLE; BLACK; ADHESIVE; TARLIKE	5	0	0	0	0	0	5	5% CELLULOSE DEBRIS, TAR
2007010872-A	NLI	01/25/2007	003DAN : BLD. A RM. 35 SE	NON-HOMOGENEOUS; NON-FRIABLE; LITE BROWN; FLOOR TILE; SOLID	0	0	0	0	0	0	0	2% CELLULOSE CASO, PIGMENT
2007010872-B	NLI	01/25/2007	003DAN : BLD. A RM. 35 SE	NON-HOMOGENEOUS; NON-FRIABLE; BLACK; ADHESIVE; TARLIKE	5	0	0	0	0	0	5	5% CELLULOSE DEBRIS, TAR
2007010873	NLI	01/25/2007	003DAN : BLD. A RM. 35 NW	NON-HOMOGENEOUS; NON-FRIABLE; BLACK; ADHESIVE; TARLIKE	5	0	0	0	0	0	5	5% CELLULOSE DEBRIS, TAR

COMMENT(S): NO FLOOR TILE.

Lab Supervisor Signature and Date: 1/29/07

Signature of Analyst:

Note: 0%: No Asbestos Detected; <1%: Asbestos Detected Above 0% and Below or Equal to 1%
NA: N plicable. "Quantification done by optical estimate" 1 - 5 % considered non-quantifiabl
This rc lates to only the material tested. An asterisk '*' indicates preliminary results.

This report is not used by LAUSD to claim product endorsement by NVLAP or any agency of the U.S. Government.
This report may not be reproduced except in its entirety.

AGRAM OF BUILDING AREAS

APPLICATION NO. 22/

DRAWING BAT04F1

SCHOOL: BASSETT STREET SCHOOL

ADDRESS: 15756 BASSETT STREET
VAN NUYS, CA 91406

DISTRICT: LOS ANGELES UNIFIED SCHOOL DISTRICT

BUILDING 4

PLOT PLANS AND
ALLOTMENTS UNIT
IBM TOWER - ROOM 420

BASSETT ST. ES (2323)
REPLACE DETERIORATED FLOORING.

CLASSROOM BLDG A (003DAN)

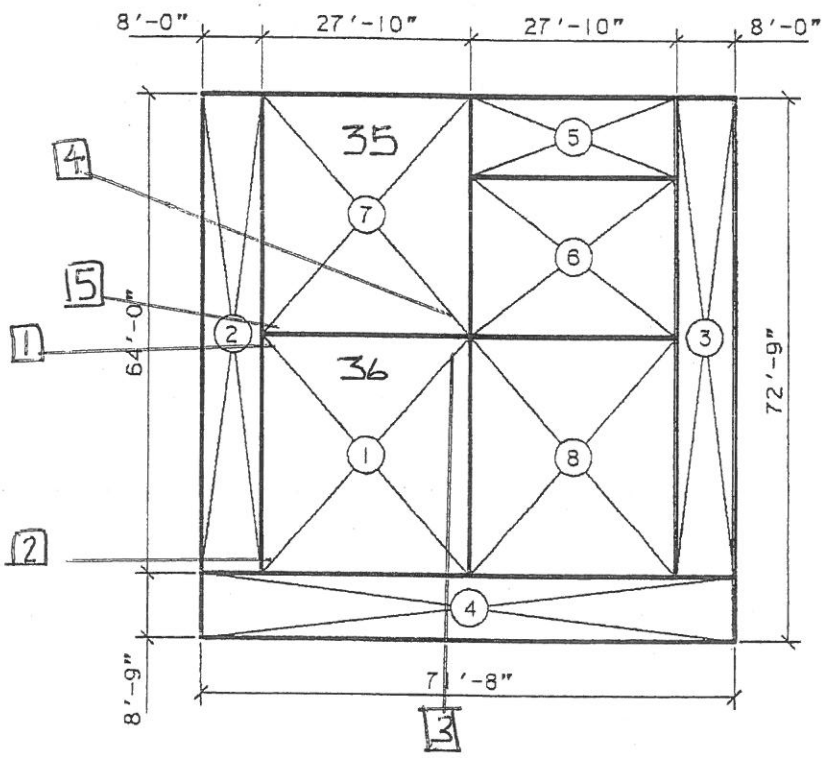

SAMPLED BY:
J.C. CARBAJAL

JAN 22 2007

SAMPLES: 1 THRU 5
12X12 LT. BROWN
FLOOR TILE
W/ADHESIVE

PLOT SCALE: 1"=20'-0"

AUTHORIZED AGENT
LOS ANGELES UNIFIED SCHOOL DISTRICT

DATE: 01/05/95
SHEET 9 OF 41 SHEETS

LOS ANGELES UNIFIED SCHOOL DISTRICT
OFFICE OF ENVIRONME. HEALTH AND SAFETY
CHAIN-OF-CUSTODY FOR BULK ANALYSIS

NAME: Bassett ES CODE: 2323 PROJECT: Fire Alarm Project 245781

PLED BY: Ardian Stefanus DEPT / CONSULTANT: CSC TEL NO.: 818 727 2553 DATE SAMPLED: 10/30/06

all information legibly and precisely. Sampler should make a copy before submitting samples to the lab. USE BLACK/BLUE INK ONLY.

al to OEHS lab with samples. Results and a copy of the Chain of Custody with sample numbers will be submitted to ATU when completed.

LAB NUMBER	SAMPLE NUMBER	BUILDING NUMBER	BUILDING NAME	ROOM NUMBER AND/OR NAME	LOCATION IN ROOM	MATERIAL TYPE (DESCRIBE)	FRIABLE (CIRCLE ONE)
10-1557	B25	005 DAN	Bldg "C"	Rm 26	N	Barrier paper above ceiling tiles	YES NO
10-1558	B26	↓	↓	Rm 27	W	↓	YES NO
10-1559	B27	↓	↓	Rm 28	C	↓	YES NO
0-1560	B28	006 DAN	Bldg "D"	Faculty Rest Room	C	12x12 straight ceiling tiles	YES NO
10-1561	B29	↓	↓	Rm 39	S	↓	YES NO
10-1562	B30	↓	↓	Ball Rm	N	↓	YES NO
10-1563	B31	↓	↓	Faculty Rest Room	C	Barrier paper above ceiling tile	YES NO
0-1564	B32	↓	↓	Rm 39	S	↓	YES NO
10-1565	B33	↓	↓	Ball Rm	N	↓	YES NO
10-1566	B34	007 DAN	Kindergarten	Storage Room	W	Sand plaster ceiling	YES NO
0-1567	B35	↓	↓	↓	C	↓	YES NO
-1568	B36	↓	↓	↓	E	↓	YES NO

	TIME:	NAME (PRINT & SIGN):	DEPT/AREA/CONSULTANT:	NO. OF SAMPLES:
30/06	5:00 PM	Ardian Stefanus	CSC	12
1/06	2:00	Brenda Davidson Brenda	OEHS	12

Bond Funded: Yes / No

Type of Bond: 57.00570

Job Cost #:

Other Than Bond Describe

Maintenance & Operations:

Deferred Maintenance:

Other:

os Angeles Unified [illegible] District
ffice of Environme[illegible] Health and Safety
349 S. San Pedro St.
os Angeles, CA 90015
213)745-1138

Asbestos Bulk Sa[illegible] Analysis
Laboratory [illegible]ort

BASSETT ST ELEM
2323

NVLA[illegible] [illegible]# 101505-0
Method EPA/600/R-93/116, [illegible] July 1993
Date Received: 10/31/2006

AUSD Lab#.	MIC	Date Analyzed	BUILDING/AREA SAMPLED	MATERIAL DESCRIPTION	CHR %	AM %	CROC %	TREM %	ACT %	ANTH %	TOTAL %	MATERIAL BACKGROUND
006101557	NLI	11/01/2006	005DAN : BLD. "C" RM. 26 N	NON-HOMOGENEOUS; FRIABLE; DARK BROWN; BARRIER PAPER/CEILING; PAPER WITH TAR	0	0	0	0	0	0	0	60% CELLULOSE DEBRIS, TAR
006101558	NLI	11/01/2006	005DAN : BLD. "C" RM. 27 W	NON-HOMOGENEOUS; FRIABLE; DARK BROWN; BARRIER PAPER/CEILING; PAPER WITH TAR	0	0	0	0	0	0	0	60% CELLULOSE DEBRIS, TAR
006101559	NLI	11/01/2006	005DAN : BLD. "C" RM. 28 CTR.	NON-HOMOGENEOUS; FRIABLE; DARK BROWN; BARRIER PAPER/CEILING; PAPER WITH TAR	0	0	0	0	0	0	0	60% CELLULOSE DEBRIS, TAR
006101560	NLI	11/01/2006	006DAN : BLD. "D" FAC. RR CTR.	NON-HOMOGENEOUS; FRIABLE; BROWN; CEILING TILE; FIBROUS/ BOARD	0	0	0	0	0	0	0	80% CELLULOSE BINDER
006101561	NLI	11/01/2006	006DAN : BLD. "D" RM. 39 S	NON-HOMOGENEOUS; FRIABLE; BROWN; CEILING TILE; FIBROUS/ BOARD	0	0	0	0	0	0	0	80% CELLULOSE BINDER
006101562	NLI	11/01/2006	006DAN : BLD. "D" BALL RM. N	NON-HOMOGENEOUS; FRIABLE; BROWN; CEILING TILE; FIBROUS/ BOARD	0	0	0	0	0	0	0	80% CELLULOSE BINDER
006101563	NLI	11/01/2006	006DAN : BLD. "D" FAC. RR CTR.	NON-HOMOGENEOUS; FRIABLE; DARK BROWN; BARRIER PAPER/CEILING; PAPER WITH TAR	0	0	0	0	0	0	0	60% CELLULOSE DEBRIS, TAR
006101564	NLI	11/01/2006	006DAN : BLD. "D" RM. 39 S	NON-HOMOGENEOUS; FRIABLE; DARK BROWN; BARRIER PAPER/CEILING; PAPER WITH TAR	0	0	0	0	0	0	0	60% CELLULOSE DEBRIS, TAR

Lab Supervisor Signature and Date: [illegible] 11/13/06

Signature of Analyst: [illegible]

Note: 0%: No Asbestos Detected; <1%: Asbestos Detected Above 0% and Below or Equal to 1%
NA: Not Applicable. "Quantification done by optical estimate" 1 - 5 % considered non-quantifiable.
This report relates to only the material tested. An asterisk '*' indicates preliminary results.

This report is not used by LAUSD to claim product endorsement by NVLAP or any agency of the U.S. Government.
This report may not be reproduced except in its entirety.

Los Angeles Unifie[illegible]ool District
Office of Environ[illegible] Health and Safety
1449 S. San Pedro S[illegible]
Los Angeles, CA 90015
(213)745-1138

Asbestos Bulk S[illegible] Analysis
Laborator[illegible]ort

BASSETT ST ELEM
2323

NVL[illegible] [illegible]# 101505-0
Method EPA/600/R-93/1[illegible]) July 1993
Date Received: 10/31/2006

LAUSD Lab#	MIC	Date Analyzed	BUILDING/AREA SAMPLED	MATERIAL DESCRIPTION	CHR %	AM %	CROC %	TREM %	ACT %	ANTH %	TOTAL %	MATERIAL BACKGROUND
2006101565	NLI	11/01/2006	006DAN : BLD. "D" BALL RM. N	NON-HOMOGENEOUS; FRIABLE; DARK BROWN; BARRIER PAPER/CEILING; PAPER WITH TAR	0	0	0	0	0	0	0	60% CELLULOSE DEBRIS, TAR
2006101566	NLI	11/01/2006	007DAN : KINDER. STORAGE RM. W	NON-HOMOGENEOUS; NON-FRIABLE; BEIGE/ WHITE; SAND PLASTER; GRANULAR WITH PAINT CHIPS	0	0	0	0	0	0	0	1% CELLULOSE CALCITE, GYPSUM, PAINT, QUARTZ
2006101567	NLI	11/01/2006	007DAN : KINDER. STORAGE RM. CTR.	NON-HOMOGENEOUS; NON-FRIABLE; BEIGE/ WHITE; SAND PLASTER; GRANULAR WITH PAINT CHIPS	0	0	0	0	0	0	0	1% CELLULOSE CALCITE, GYPSUM, PAINT, QUARTZ
2006101568	NLI	11/01/2006	007DAN : KINDER. STORAGE RM. E.	NON-HOMOGENEOUS; NON-FRIABLE; BEIGE/ WHITE; SAND PLASTER; GRANULAR WITH PAINT CHIPS	0	0	0	0	0	0	0	1% CELLULOSE CALCITE, GYPSUM, PAINT, QUARTZ

Lab Supervisor Signature and Date: [illegible] 11/3/06

Signature of Analyst: [illegible]

Note: 0%: No Asbestos Detected; <1%: Asbestos Detected Above 0% and Below or Equal to 1%
NA: Not Applicable. "Quantification done by optical estimate" 1 - 5 % considered non-quantifiable.
This report relates to only the material tested. An asterisk '*' indicates preliminary results.

This report is not used by LAUSD to claim product endorsement by NVLAP or any agency of the U.S. Government.
This report may not be reproduced except in its entirety.

OFFICE OF ENVIRONMENT/ IEALTH AND SAFETY
CHAIN-OF-CUSTODY FO.R BULK ANALYSIS

24711

ITE NAME: Bassett E.S. CODE: 2323 PROJECT: Fire Alarm

MPLED BY: Oscar Garcia DATE SAMPLED: 14 Nov 06 DEPT. / CONSULTANT: CSC, Inc. TEL. NO: (818) 727-2553

all information legibly and precisely. Sampler should make a copy before submitting samples to the lab. USE BLACK/BLUE INK ONLY
inal to OEHS lab with samples. Results and a copy of the Chain of Custody with sample numbers will be submitted to ATU when completed.

LAB. NUMBER	SAMPLE NUMBER	BUILDING NUMBER	BUILDING NAME	ROOM NUMBER AND/OR NAME	LOCATION IN ROOM	MATERIAL TYPE (DESCRIBE)	FRIABLE (CIRCLE ONE)
611-1055	B-94	X 26895	2/3 Unit Relocatable	Rm 5	NE	1'x2' Random wall Tile (ceiling)	YES / (NO)
611-1056	B-95	↓	↓	↓	SE	↓	YES / (NO)
611-1057	B-96	↓	↓	Rm 6	SW	↓	YES / (NO)
611-1058	B-97	232307	↓	Rm 7	NW	Drywall wall (No MUD)	YES / (NO)
611-1059	B-98	↓	↓	↓	SE	↓	YES / (NO)
611-1060	B-99	↓	↓	Rm 8	↓	↓	YES / (NO)
0611-1061	B-100	232313	↓	Rm 13	NE	Drywall wall (No MUD)	YES / (NO)
0611-1062	B-101	↓	↓	Rm 14	NW	↓	YES / (NO)
0611-1063	B-102	↓	↓	↓	SW	↓	YES / (NO)
0611-1064	B-103	232318	↓	Rm 18	NE	Drywall wall (No MUD)	YES / (NO)
0611-1065	B-104	↓	↓	↓	SW	↓	YES / (NO)
0611-1066	B-105	↓	↓	Rm 19	NE	↓	YES / (NO)

DATE:	TIME:	NAME (PRINT & SIGN):	DEPARTMENT / AREA / CONSULTANT:	NO. OF SAMPLES
1/15/06	1608	OSCAR GARCIA	CSC, Inc.	12
11-15-06	4:15	M. Martinez	DEHS	15

nd Funded (Yes) / No
pe of Bond:
b Cost #: 57.00570

Other Than Bond Describe
Maintenance & Operations:
Deferred Maintenance:
Other:

bulk sample submittal_8/10/01. GG

From: unknown Page: 22/25 Date: 11/20/2006 3:44:45 PM

Angeles Unified S[illegible] District
ice of Environmen[illegible] Health and Safety
9 S. San Pedro St.
Angeles, CA 90015
)745-1138

Asbestos Bulk Sa[illegible] [illegible]alysis
Laboratory [illegible]rt

BASSETT ST ELEM
2323

NVLAP [illegible]31505-0
Method EPA/600/R-93/116 [illegible]ly 1993
Date Received: 11/15/2006

USD Lab#	MIC	Date Analyzed	BUILDING/AREA SAMPLED	MATERIAL DESCRIPTION	CHR %	AM %	CROC %	TREM %	ACT %	ANTH %	TOTAL %	MATERIAL BACKGROUND
6111055	ST	11/16/2006	X2689S : 2/3 UNIT RELOC. RM. 5 NE	HOMOGENEOUS; NON-FRIABLE; BROWN; WALL TILE; FIBROUS	<1	0	0	0	0	0	<1	98% CELLULOSE PAINT
)6111056	ST	11/16/2006	X2689S : 2/3 UNIT RELOC. RM. 5 SE	HOMOGENEOUS; NON-FRIABLE; BROWN; WALL TILE; FIBROUS	<1	0	0	0	0	0	<1	98% CELLULOSE PAINT
36111057	ST	11/16/2006	X2689S : 2/3 UNIT RELOC. RM. 6 SW	HOMOGENEOUS; NON-FRIABLE; BROWN; WALL TILE; FIBROUS	<1	0	0	0	0	0	<1	98% CELLULOSE PAINT
06111058	ST	11/16/2006	232307 : 2/3 UNIT RELOC. RM. 7 NW	HOMOGENEOUS; NON-FRIABLE; WHITE; DRYWALL; CHALKY	0	0	0	0	0	0	0	1% CELLULOSE, 1% FIBERGLASS GYPSUM
)06111059	ST	11/16/2006	232307 : 2/3 UNIT RELOC. RM. 7 SE	HOMOGENEOUS; NON-FRIABLE; WHITE; DRYWALL; CHALKY	0	0	0	0	0	0	0	1% CELLULOSE, 1% FIBERGLASS GYPSUM
)06111060	ST	11/16/2006	232307 : 2/3 UNIT RELOC. RM. 8 SE	HOMOGENEOUS; NON-FRIABLE; WHITE; DRYWALL; CHALKY	0	0	0	0	0	0	0	1% CELLULOSE, 1% FIBERGLASS GYPSUM
006111061	ST	11/16/2006	232313 : 2/3 UNIT RELOC. RM. 13 NE	HOMOGENEOUS; NON-FRIABLE; WHITE; DRYWALL; CHALKY	0	0	0	0	0	0	0	1% CELLULOSE, 1% FIBERGLASS GYPSUM
:006111062	ST	11/16/2006	232313 : 2/3 UNIT RELOC. RM. 14 NW	HOMOGENEOUS; NON-FRIABLE; WHITE; DRYWALL; CHALKY	0	0	0	0	0	0	0	1% CELLULOSE, 1% FIBERGLASS GYPSUM
2006111063	ST	11/16/2006	232313 : 2/3 UNIT RELOC. RM. 14 SW	HOMOGENEOUS; NON-FRIABLE; WHITE; DRYWALL; CHALKY	0	0	0	0	0	0	0	1% CELLULOSE, 1% FIBERGLASS GYPSUM

Lab Supervisor Signature and Date: [illegible] | 11/20/06 | Signature of Analyst: _____

Note: 0%: No Asbestos Detected; <1%: Asbestos Detected Above 0% and Below or Equal to 1%
NA: Not Applicable. "Quantification done by optical estimate" 1 - 5 % considered non-quantifiable.
This report relates to only the material tested. An asterisk '*' indicates preliminary results.

This report is not used by LAUSD to claim product endorsement by NVLAP or any agency of the U.S. Government.
This report may not be reproduced except in its entirety.

Date: 11/20/2006 3:44:44 PM
Page: 20/25
From: unknown

. Angeles Unified . District
ice of Environmental Health and Safety
9 S. San Pedro St.
. Angeles, CA 90015
3)745-1138

Asbestos Bulk San nalysis
Laboratory Report

BASSETT ST ELEM
2323

NVLAP 101505-0
Method EPA/600/R-93/116(R July 1993
Date Receive 11/15/2006

USD Lab#	MIC	Date Analyzed	BUILDING/AREA SAMPLED	MATERIAL DESCRIPTION	CHR %	AM %	CROC %	TREM %	ACT %	ANTH %	TOTAL %	MATERIAL BACKGROUND
06111064	ST	11/16/2006	232318 : 2/3 UNIT RELOC. RM. 18 NE	HOMOGENEOUS; NON-FRIABLE; WHITE; DRYWALL; CHALKY	0	0	0	0	0	0	0	1% CELLULOSE, 1% FIBERGLASS GYPSUM
06111065	ST	11/16/2006	232318 : 2/3 UNIT RELOC. RM. 18 SW	HOMOGENEOUS; NON-FRIABLE; WHITE; DRYWALL; CHALKY	0	0	0	0	0	0	0	1% CELLULOSE, 1% FIBERGLASS GYPSUM
06111066	ST	11/16/2006	232318 : 2/3 UNIT RELOC. RM. 19 NE	HOMOGENEOUS; NON-FRIABLE; WHITE; DRYWALL; CHALKY	0	0	0	0	0	0	0	1% CELLULOSE, 1% FIBERGLASS GYPSUM

Lab Supervisor Signature and Date: C Galonstia 11/20/06

Signature of Analyst: _____

Note: 0%: No Asbestos Detected; <1%: Asbestos Detected Above 0% and Below or Equal to 1%
NA: Not Applicable. "Quantification done by optical estimate" 1 - 5 % considered non-quantifiable.
This report relates to only the material tested. An asterisk '*' indicates preliminary results.

This report is not used by LAUSD to claim product endorsement by NVLAP or any agency of the U.S. Government.
This report may not be reproduced except in its entirety.

From: unknown Page: 21/25 Date: 11/20/2006 3:44:45 PM

CSC BUILDING SKETCH & PLOTTING WORKSHEET

Sketch By: Oscar Garcia | Date: 11/15/06

Building(s) show on this sketch: 232307, ~~232308~~ 232313, 232318, 232320

Bassett E.S. (2323) — Fire Alarm

97 Drywall
98 - wall (NOMUD)
99

100 Drywall
101 - wall
102 (NOMUD)

103
104 - Drywall
105 wall
(NOMUD)

106 Drywall/wall
107 - (NO MUD)
108

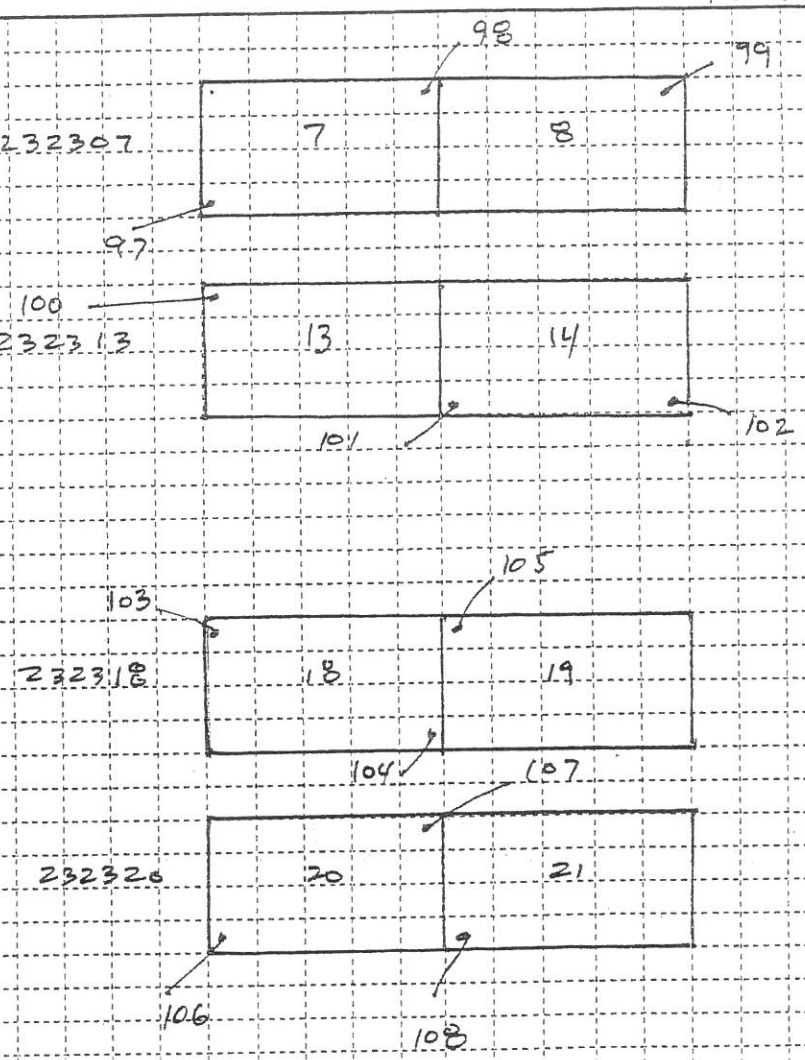

Comments

North

Clark Seif Clark- 21732 Devonshire Street, Suite B, Chatsworth, CA 91311 (818) 727-2553 Fax (818) 727-2556
www.csceng.com

OEHS LABORATORY
ASBESTOS BULK SAMPLE SUBMITTAL

16353

SITE NAME BASSET E.S. CODE 2323 PROJECT CLASSROOM SIZE REDUCTION

SAMPLED BY TAMIS GATLES DEPT. CSC TEL. NO. 818-727-2553 DATE SAMPLED 6/2/04

Fill in all information Legibly and Precisely. Sampler should make a copy before submitting to the lab. DO NOT USE PENCIL (Rev. 05/01)

Original to OEHS lab with samples. Results sheet to be FAXED to Sampler when completed.

LAB NUMBER	SAMPLE NUMBER	BUILDING NUMBER	BUILDING NAME	ROOM NUMBER AND/OR NAME	LOCATION IN ROOM	MATERIAL TYPE (DESCRIBE)	FRIABLE (CIRCLE)
0406-0519	5436-B-12	232320	RELOCTABLE CLASSROOM	EXTERIOR RAMP	SOUTH	GREY NON-SKID	YES (NO)
0406-0520	-B-13	OOSDAN	BLDG. C	BOYS REST ROOM	SOUTH	BEIGE SAND PLASTER WALL	(YES) NO
0406-0521	-B-14				NW		(YES) NO
0406-0522	B-15			GIRLS REST ROOM	SE		(YES) NO
							YES NO
							YES NO
							YES NO
							YES NO
							YES NO
							YES NO
							YES NO

CHAIN OF CUSTODY:

DATE:	TIME:	NAME (PRINT & SIGN):	DEPARTMENT / AREA:	NO. OF SAMPLES:
6/4/04	1510	TAMIS GATLES	CSC	4
6-8-04	3:40p	M. Martinez / [signature]	OEHS	4

Los Angeles Unified School District
Office of Environmental Health and Safety
1449 S. San Pedro St.
Los Angeles, CA 90015
(213) 745-1138

Asbestos Bulk Sample Analysis
Laboratory Report
BASSETT ST ELEM
2323

NVLAP LAB# 101505-0
Method EPA/600/R-93/116(MOD) July 1993
Date Received: 06/08/2004

LAUSD Lab#	MIC	Date Analyzed	BUILDING / AREA SAMPLED	MATERIAL DESCRIPTION	CHR %	AM %	CROC %	TREM %	ACT %	ANTH %	TOTAL %	MATERIAL BACKGROUND
2004060519	NLI	06/10/2004	232320 : RELOC/CLSRM EXTER. RAMP SOUTH	NON-HOMOGENEOUS; NON-FRIABLE; GRAY; NON-SKID MATERIAL; COATED MATERIAL	0	0	0	0	0	0	0	1% CELLULOSE ORG.MATERIAL, PAINT, SAND
2004060520	NLI	06/10/2004	005DAN : BLD. C BOYS RR SOUTH	NON-HOMOGENEOUS; FRIABLE; OFF WHITE; SAND PLASTER; GRANULAR/CEMENTITIOUS	0	0	0	0	0	0	0	<1% CELLULOSE CALCITE, GYPSUM, QUARTZ
2004060521	NLI	06/10/2004	005DAN : BLD. C BOYS RR NW	NON-HOMOGENEOUS; FRIABLE; OFF WHITE; SAND PLASTER; GRANULAR/CEMENTITIOUS	0	0	0	0	0	0	0	<1% CELLULOSE CALCITE, GYPSUM, QUARTZ
2004060522	NLI	06/10/2004	005DAN : BLD. C GIRLS RR SE	NON-HOMOGENEOUS; FRIABLE; OFF WHITE; SAND PLASTER; GRANULAR/CEMENTITIOUS	0	0	0	0	0	0	0	<1% CELLULOSE CALCITE, GYPSUM, QUARTZ

Lab Supervisior Signature and Date: G Gazlonstian 6, 11, 04 Signature of Analyst:

Note: 0%: No Asbestos Detected; < 1 %: Asbestos Detected Above 0% and Below or Equal to 1 %
"Quantification done by optical estimate" 1 - 5 % considered non-quantifiable.
This report relates to only the material tested. An asterisk '*' indicates preliminary results.

This report is not used by LAUSD to claim product endorsement by NVLAP or any agency of the U.S. Government.
This report may not be reproduced except in its entirety.

48h TAT

PS02795

OEHS LABORATORY
ASBESTOS BULK SAMPLE SUBMITTAL

SITE NAME BASSETT E.S CODE 2323 PROJECT HVAC — MULTIPURPOSE BLDG.

SAMPLED BY ULISES MONSALVO DEPT. CSC TEL. NO. (518) 727-2553 DATE SAMPLED 02-06-02

Fill in all information Legibly and Precisely. Sampler should make a copy before submitting to the lab. DO NOT USE PENCIL (Rev. 05/01)

Original to OEHS lab with samples. Results sheet to be FAXED to Sampler when completed.

LAB NUMBER	SAMPLE NUMBER	BUILDING NUMBER	BUILDING NAME	ROOM NUMBER AND/OR NAME	LOCATION IN ROOM	MATERIAL TYPE (DESCRIBE)	FRIABLE (CIRCLE)
	8841B-B01	002DAN	MULTIPURPOSE BLDG.	ROOF	S|W UPPER ROOF	ROOF MASTIC BLACK	YES (NO)
	B02				S|W LOWER ROOF		YES (NO)
	B03				WEST LOWER ROOF		YES (NO)
	B04			BOILER ROOM	N|E	VIBRATION REDUCER BLACK/RED	YES (NO)
	B05			AIR HANDLING Rm	SOUTH		YES (NO)
	B06				N|E		YES (NO)
	B07			BOILER Rm	NORTH|WEST	DUCT TAPE BAIGE	YES (NO)
	B08				WEST		YES (NO)
	B09			AIR HANDLING Rm	CENTER		YES (NO)
	B10			EXTERIOR WALLS	N|E	EXTERIOR STUCCO W|BAIGE PAINT	YES (NO)
	B11				S|E		YES (NO)

CHAIN OF CUSTODY:

DATE:	TIME:	NAME (PRINT & SIGN):	DEPARTMENT / AREA:	NO. OF SAMPLES
02-08-02	14:00	ULISES MONSALVO / Ulises Monsalvo	CLARK SELF CLARK	11
02-15-02		FUCH Rex Fox / FUCH Rex	CSC INC	11
FEB		Rena Rapp		

2795 4 of 7 TA

OEHS LABORATORY
ASBESTOS BULK SAMPLE SUBMITTAL

SITE NAME BASSETT E-S CODE 2323 PROJECT HVAC - MULTIPURPUSE BLDG.

SAMPLED BY ULISES MONSALVO DEPT. CSC TEL. NO. (818) DATE SAMPLED 02-06-02

Fill in all information Legibly and Precisely. Sampler should make a copy before submitting to the lab. DO NOT USE PENCIL (Rev. 05/01)

Original to OEHS lab with samples. Results sheet to be FAXED to Sampler when completed.

LAB NUMBER	SAMPLE NUMBER	BUILDING NUMBER	BUILDING NAME	ROOM NUMBER AND/OR NAME	LOCATION IN ROOM	MATERIAL TYPE (DESCRIBE)	FRIABLE (CIRCLE)
	884 B-B12	002DAM	MULTIPURPOSE	EXTERIOR WALLS	S/E	EXTERIOR STUCCO W/ BAIGT PAINT	YES (NO)
	B13				S/E KITCHEN		YES (NO)
	B14				S/W		YES (NO)
	B15				WEST		YES (NO)
	B16				N/W		YES (NO)
							YES NO
							YES NO
							YES NO
							YES NO
							YES NO
							YES NO

CHAIN OF CUSTODY:

DATE:	TIME:	NAME (PRINT & SIGN):	DEPARTMENT / AREA:	NO. OF SAMPLES:
02-06-02	14-00	ULISES MONSALVO / Ulises Monsalvo	CLARK SEIF CLARK	5
02-15-02		Fuentes [illegible]	CSC INC.	5
FEB 18 2002		[illegible]		

159 Pasadena Ave
South Pasadena, CA 91030
Phone: (323) 254-9960 Fax: (323) 254-9982

LA TESTING

Attn.: Robert Clark
Clark Seif Clark, inc
PO BOX 4299
Chatsworth, CA 91313

Wednesday, February 20, 2002

Ref Number: PS02795

POLARIZED LIGHT MICROSCOPY (PLM)

Performed by EPA 600/R-93/116 Method*

Project: Bassett E.S.

Sample	Location	Appearance	Sample Treatment	ASBESTOS %	ASBESTOS Type	NON-ASBESTOS %	NON-ASBESTOS Fibrous	NON-ASBESTOS %	NON-ASBESTOS Non-Fibrous
8841B-B01	002 dan multi purpose bldg roof sw upper roof	Black/Silver Fibrous Homogeneous	Teased		None Detected		5% Cellulose		20% Matrix 75% Other
8841B-B02	002 dan multi purpose bldg roof sw lower roof	Black/Silver Fibrous Homogeneous	Teased		None Detected		5% Cellulose		20% Matrix 75% Other
8841B-B03	002 dan multi purpose bldg roof w lower roof	Black/White Fibrous Heterogeneous	Teased		None Detected		5% Cellulose		5% Quartz 20% Matrix 70% Other
8841B-B04	002 dan multi purpose bldg boiler rm ne	Black Fibrous Homogeneous	Teased		None Detected		80% Glass		20% Other
8841B-B05	002 dan multi purpose bldg air handling rm s	Black Fibrous Homogeneous	Teased		None Detected		80% Glass		20% Other
8841B-B06	002 dan multi purpose bldg air handling rm ne	Black Fibrous Homogeneous	Teased		None Detected		80% Glass		20% Other

Comments: For all obviously heterogeneous samples easily separated into subsamples, and for layered samples, each component is analyzed separately. Also, "# of Layers" refers to number of separable subsamples.

* NY samples analyzed by ELAP 198.1 Method.

Jeff Krogstad
Analyst

Approved
Signatory

Disclaimers: PLM has been known to miss asbestos in a small percentage of samples which contain asbestos. Thus negative PLM results cannot be guaranteed. LA Testing suggests that samples reported as <1% or none detected be tested with either SEM or TEM. The above test report relates only to the items tested. This report may not be reproduced, except in full, without written approval by LA Testing. The above test must not be used by the client to claim product endorsement by NVLAP nor any agency of the United States Government. Laboratory is not responsible for the accuracy of results when requested to physically separate and analyze layered samples.

Analysis performed by LA Testing, inc. (NVLAP Air and Bulk #200232-0, State: CA 2283, AZ AZ0921, TX 43369)

159 Pasadena Ave
South Pasadena, CA 91030
Phone: (323) 254-9960 Fax: (323) 254-9982

LA TESTING

Attn.: Robert Clark
Clark Seif Clark, Inc
PO BOX 4299
Chatsworth, CA 91313

Wednesday, February 20, 2002

Ref Number: PS02795

POLARIZED LIGHT MICROSCOPY (PLM)

Performed by EPA 600/R-93/116 Method*

Project: Bassett E.S.

Sample	Location	Appearance	Sample Treatment	ASBESTOS %	ASBESTOS Type	NON-ASBESTOS %	NON-ASBESTOS Fibrous	NON-ASBESTOS %	NON-ASBESTOS Non-Fibrous
8841B-B07	002 dan multi purpose bldg boiler rm nw	Tan Fibrous Heterogeneous	Teased		None Detected	60%	Cellulose 30% Glass	10%	Other
8841B-B08	002 dan multi purpose bldg boiler rm w	Tan Fibrous Heterogeneous	Teased		None Detected	60%	Cellulose 30% Glass	10%	Other
8841B-B09	002 dan multi purpose bldg air handling rm center	Tan Fibrous Heterogeneous	Teased		None Detected	60%	Cellulose 30% Glass	10%	Other
8841B-B10	002 dan multi purpose bldg exterior wall ne	Beige/Grey Non-Fibrous Heterogeneous	Crushed/Dissolved		None Detected		None Detected	30% 20% 50%	Quartz Ca Carbonate Matrix
8841B-B11	002 dan multi purpose bldg exterior wall se	Beige/Grey Non-Fibrous Heterogeneous	Crushed/Dissolved		None Detected		None Detected	30% 20% 50%	Quartz Ca Carbonate Matrix
8841B-B12	002 dan multi purpose bldg exterior wall se	Beige/Grey Non-Fibrous Heterogeneous	Crushed/Dissolved	< 1%	Chrysotile		None Detected	30% 20% 50%	Quartz Ca Carbonate Matrix

Comments: For all obviously heterogeneous samples easily separated into subsamples, and for layered samples, each component is analyzed separately. Also, "# of Layers" refers to number of separable subsamples.

* NY samples analyzed by ELAP 198.1 Method.

Jeff Krogstad
Analyst

Approved
Signatory

Disclaimers: PLM has been known to miss asbestos in a small percentage of samples which contain asbestos. Thus negative PLM results cannot be guaranteed. LA Testing suggests that samples reported as <1% or none detected be tested with either SEM or TEM. The above test report relates only to the items tested. This report may not be reproduced, except in full, without written approval by LA Testing. The above test must not be used by the client to claim product endorsement by NVLAP nor any agency of the United States Government. Laboratory is not responsible for the accuracy of results when requested to physically separate and analyze layered samples.

Analysis performed by LA Testing, Inc. (NVLAP Air and Bulk #200232-0, State: CA 2283, AZ AZ0921, TX 43369).

159 Pasadena Ave
South Pasadena, CA 91030
Phone: (323) 254-9960 Fax: (323) 254-9982

LA TESTING

Attn.: Robert Clark
Clark Seif Clark, Inc
PO BOX 4299
Chatsworth, CA 91313

Wednesday, February 20, 2002

Ref Number: PS02795

POLARIZED LIGHT MICROSCOPY (PLM)

Performed by EPA 600/R-93/116 Method*

Project: Bassett E.S.

Sample	Location	Appearance	Sample Treatment	ASBESTOS % Type	NON-ASBESTOS % Fibrous	% Non-Fibrous
8841B-B13	002 dan multi purpose bldg exterior wall se kitchen	Beige/Grey Non-Fibrous Heterogeneous	Crushed/Dissolved	None Detected	None Detected	30% Quartz 20% Ca Carbonate 50% Matrix
8841B-B14	002 dan multi purpose bldg exterior wall sw	Beige/Grey Non-Fibrous Heterogeneous	Crushed/Dissolved	None Detected	None Detected	30% Quartz 20% Ca Carbonate 50% Matrix
8841B-B15	002 dan multi purpose bldg exterior wall w	Beige/Grey Non-Fibrous Heterogeneous	Crushed/Dissolved	< 1% Chrysotile	None Detected	30% Quartz 20% Ca Carbonate 50% Matrix
8841B-B16	002 dan multi purpose bldg exterior wall nw	Beige/Grey Non-Fibrous Heterogeneous	Crushed/Dissolved	None Detected	None Detected	30% Quartz 20% Ca Carbonate 50% Matrix

Comments: For all obviously heterogeneous samples easily separated into subsamples, and for layered samples, each component is analyzed separately. Also, "# of Layers" refers to number of separable subsamples.

* NY samples analyzed by ELAP 198.1 Method.

Jeff Krogstad
Analyst

Approved
Signatory

Disclaimers: PLM has been known to miss asbestos in a small percentage of samples which contain asbestos. Thus negative PLM results cannot be guaranteed. LA Testing suggests that samples reported as <1% or none detected be tested with either SEM or TEM. The above test report relates only to the items tested. This report may not be reproduced, except in full, without written approval by LA Testing. The above test must not be used by the client to claim product endorsement by NVLAP nor any agency of the United States Government. Laboratory is not responsible for the accuracy of results when requested to physically separate and analyze layered samples.

Analysis performed by LA Testing, Inc. (NVLAP Air and Bulk #200232-0, State: CA 2283, AZ AZ0921, TX 43369)

2795 48hr TAT

OEHS LABORATORY
ASBESTOS BULK SAMPLE SUBMITTAL

SITE NAME OASSETT E.S
SAMPLED BY ULISES MONSALVO
CODE 2223
DEPT. CSC
PROJECT HVAC - MULTIPURPOSE BLDG.
TEL NO. (818)
DATE SAMPLED 02-05-02

Fill in all information Legibly and Precisely. Sampler should make a copy before submitting to the lab.
DO NOT USE PENCIL
Original to OEHS lab with samples. Results sheet to be FAXED to Sampler when completed
(Rev. 01/01)

LAB NUMBER	SAMPLE NUMBER	BUILDING NUMBER	BUILDING NAME	ROOM NUMBER AND/OR NAME	LOCATION IN ROOM	MATERIAL TYPE (DESCRIBE)	FRIABLE (CIRCLE)
	724 B-B12	007 DAM	MULTIPURPOSE	EXTERIOR WALLS	S/E	EXTERIOR STUCCO W/ LATEX PAINT	YES (NO)
	B13				S/E KITCHEN		YES (NO)
	B14				S/W		YES (NO)
	B15				WEST		YES (NO)
	B16				N/W		YES (NO)
							YES NO
							YES NO
							YES NO
							YES NO
							YES NO
							YES NO

CHAIN OF CUSTODY:

DATE:	TIME:	NAME (PRINT & SIGN)	DEPARTMENT / AREA:	NO OF SAMPLES:
02-05-02	14:00	ULISES MONSALVO	CLARK SELF CLARK	5
02-15-02		Fuen Rx to	CSC INC	5
FEB 18 2002				
02-4-03	3:35p	Jim Barnor Barrios	MK INC	2

MAY 7 2003

TOTAL P.02

MAY-07-2003 02:16 FROM LAUSD / ATU TO 18187272556 P.02

Micron Environmental Labs
500 N. First Avenue, Suite 4
Arcadia, CA 91006
(626)574-7591
FAX: (626)574-7593

Analytical Method: EPA 600/R-93/116
NIST / NVLAP Lab Code No. 200294-0
California ELAP Certificate No. 2257

Micron Ref. #
12203037

Bulk Sample Analysis Summary

Client Project: *1098841B/Bassett E.S.* Microscopist: *Danny Gamez*

June 10, 2003

Carlos Mangin
Clark Seif Clark, Inc.
P.O. Box 4299
Chatsworth, CA 91313

Date Collected: *February 6, 2002*
Date Received: *May 30, 2003*
Date Analyzed: *June 6, 2003*
No. Samples: *2*

Client ID No. / Micron ID No.	Sample Description / Color	Asbestos counts/ Total Counts Analytical Results	Q.C.
8841B-B12	*Ext. Stucco*	*0/1000*	
109112		*<0.1% CHRY*	
		99.9% Fillers	
RF-0.6019/Acid Dissolution			
8841B-B15	*Ext. Stucco*	*0/1000*	
109113		*<0.1% CHRY*	
		99.9% Fillers	
RF-0.6616/Acid Dissolution			

Microscopist:

The limit of detection for this analytical method using 400 points is 0.25 percent asbestos (area estimates). The limit of detection for this analytical method using 1000 points is 0.10 percent asbestos (area estimates).

FAX: (2[redacted]) 632-0414

ASBESTOS BULK SAMPLE SUBMITTAL

Submitted by ACC Environmental Inc. Phone: (310) 312-9642 - ~~Fax: (510) 638-8404~~

SITE NAME: Bassett E.S. CODE: 2323 PROJECT: Exterior Painting

SAMPLED BY: Fidel Flores DEPT.: ACC TEL. NO. (213) 632-0410 DATE SAMPLED: 1/4/02

Fill in all information Legibly and Precisely. Sampler should make a copy before submitting to the lab. **BLACK INK ONLY** (Rev. 5/01)

Original to OEHS lab with samples. Lab will FAX a copy to ATU with sample numbers. Results sheet to be FAXED to ATU when completed.

LAB NUMBER	SAMPLE NUMBER	BUILDING NUMBER	BUILDING NAME	ROOM NUMBER AND/OR NAME	LOCATION IN ROOM	MATERIAL TYPE (DESCRIBE)	FRIABLE (CIRCLE)
0201-0551	01	001DAN	Administrative	Exterior	South wall	Exterior Stucco	YES NO
0201-0552	02				East Wall		YES NO
0201-0553	03				West wall		YES NO
0201-0554	04				South Wall	Window putty	YES NO
0201-0555	05				West wALL		YES NO
0201-0556	06				North wall		YES NO
0201-0557	07			Soffit Exterior	Soffit West	plaster on soffit	YES NO
0201-0558	08	002DAN	Multi-Purpose Bldg.	Exterior	West	window putty	YES NO
0201-0559	09				South West	Window putty	YES NO
0201-0560	010				South	window putty	YES NO

CHAIN OF CUSTODY:

DATE:	TIME:	NAME: PRINT AND SIGN	DEPARTMENT/AREA	NO. OF SAMPLES:
1/7/02	9AM	Justin Graham	ACC	10
1/7/02	3:20 PM.	Mike Araujo	ACC	10
1/7/02	8:20A	Sevus	OEHS	60

Los Angeles Unified School District
Environmental Health and Safety Branch
1449 S. San Pedro St.
Los Angeles, CA 90015
(213) 742-5086

ASBESTOS BULK SAMPLE ANALYSIS
LABORATORY REPORT
BASSETT ST ELEM
2323

NVLAP #1505
METHOD EPA/600/R-93/116 (MOD) JULY 1993
Date Received: 1/7/02

LAUSD Lab#	MIC	Date Analyzed	BUILDING / AREA SAMPLED	MATERIAL DESCRIPTION	CHR %	AM %	OTH %	TOTAL %	MATERIAL BACKGROUND
0201-0551	NLI	1/12/02	001DAN, ADMIN., EXT. / S.WALL	NON-HOMOGENEOUS, NON-FRIABLE, BGE, EXTERIOR STUCCO, COATED/CEMENTITIOUS	0	0	0	0	CELLULOSE 1%, PAINT, SAND, GYPSUM
0201-0552	NLI	1/12/02	001DAN, ADMIN., EXT. / E.WALL	NON-HOMOGENEOUS, NON-FRIABLE, BGE, EXTERIOR STUCCO, COATED/CEMENTITIOUS	<1	0	0	<1	PAINT, SAND, GYPSUM
0201-0553	NLI	1/12/02	001DAN, ADMIN., EXT. / W.WALL	NON-HOMOGENEOUS, NON-FRIABLE, BGE, EXTERIOR STUCCO, COATED/CEMENTITIOUS	0	0	0	0	CELLULOSE 2%, PAINT, SAND, GYPSUM
0201-0554	NLI	1/12/02	001DAN, ADMIN., EXT. / S.WALL	NON-HOMOGENEOUS, NON-FRIABLE, GRY, PUTTY, COATED/SOLID	3	0	0	3	CELLULOSE 2%, PAINT, GYPSUM, CALCITE
0201-0555	NLI	1/12/02	001DAN, ADMIN., EXT. / W.WALL	NON-HOMOGENEOUS, NON-FRIABLE, GRY, PUTTY, COATED/SOLID	5	0	0	5	CELLULOSE 2%, PAINT, GYPSUM, CALCITE
0201-0556	NLI	1/12/02	001DAN, ADMIN., EXT. / N.WALL	NON-HOMOGENEOUS, NON-FRIABLE, GRY, PUTTY, COATED/SOLID	3	0	0	3	CELLULOSE 2%, PAINT, GYPSUM, CALCITE
0201-0557	NLI	1/12/02	001DAN, ADMIN., SOFFIT EXT. / SOFFIT W.	NON-HOMOGENEOUS, NON-FRIABLE, BGE, PLASTER, COATED/CEMENTITIOUS	2	0	0	2	CELLULOSE 1%, PAINT, SAND, GYPSUM
0201-0558	NLI	1/12/02	002DAN, MULTI.PURP.BLDG., EXT. / W.	NON-HOMOGENEOUS, NON-FRIABLE, YEL, PUTTY, COATED/SOLID	3	0	0	3	CELLULOSE 1%, PAINT, GYPSUM, CALCITE
0201-0559	NLI	1/12/02	002DAN, MULTI.PURP.BLDG., EXT. / S.W.	NON-HOMOGENEOUS, NON-FRIABLE, YEL, PUTTY, COATED/SOLID	<1	0	0	<1	CELLULOSE 2%, PAINT, GYPSUM, CALCITE
0201-0560	NLI	1/12/02	002DAN, MULTI.PURP.BLDG., EXT. / S.	NON-HOMOGENEOUS, NON-FRIABLE, YEL, PUTTY, COATED/SOLID	<1	0	0	<1	CELLULOSE 2%, PAINT, GYPSUM, CALCITE

Signature of Lab Supervisor: S Garboustian Signature of Analyst: _____

Note: 0%: No Asbestos Detected; <1%: Asbestos Detected Above 0% and Below or Equal to 1%.
"Quantification done by optical estimate" 1 - 5% considered non-quantifiable.
This report relates to only the material tested.
This report is not used by the LAUSD/EHSB to claim product endorsement by NVLAP or any agency of the U.S. government.
This report may not be reproduced except in its entirety.

Hygeia Laboratories Inc.
82 W. Sierra Madre Blvd
Sierra Madre, CA 91024-2434
(626) 355-4711 (626) 355-4497 Fax

NIST/NVLAP Lab Code 102116-0
California ELAP Certificate No. 1269
New York ELAP Certificate No. 11017

Bulk Sample Analysis Summary

Analytical Method: EPA 600/R-93/116

February 7, 2002

Ms. Greta Galoustian
LA Unified School District
1449 S. San Pedro
Los Angeles, CA 90015
0201-0552 & 0557 Bassett E.S.

Samples Analyzed: 2
Sampler: F. Flores

Hygeia Reference No.: 71089 02 0044
Date Collected: January 4, 2002
Date Received: January 16, 2002
Date Analyzed: February 7, 2002

Client Sample ID / Hygeia Sample ID	Sample Description - color / *Comments*	Asbestos Detected	Asbestos Type, %						Non-Asbestos Constituents, %								QC
			Chrysotile	Amosite	Crocidolite	Tremolite	Anthophyllite	Actinolite	Cellulose	Fiberglass	Synthetic	Mineral Fillers	Vermiculite	Organic Binders			
0201-0552 716817	Exterior stucco - tan/white	Yes	< 1									100					
0201-0557 716818	Plaster on soffit - tan/white	Yes	< 1									100					

Microscopist - Rafik Vartanian, Ph.D.

The analyses of the samples in this report were performed using polarized light microscopy using the EPA method 600/R-93/116. The phase abundances provided are visually estimated and expressed as percent area. Total percentage of sample constituents may total greater than 100 due to trace amounts. The limit of detection for this analytical method is less than one percent. In multilayer samples, unless otherwise specified, the asbestos concentration is reported for the layer where asbestos is found. These results lie within the statistical limits of variability calculated for standard reference samples routinely analyzed in the laboratory. On a per sample basis, the accuracy and precision of the results depend on the type of sample and its asbestos content.

Hygeia recommends trasmission electron microscopy (TEM) analysis on organically bound bulk materials (eg., vinyl floor tile, mastics, roofing materials, joint compounds) when PLM analysis shows undetectable quantities of asbestos. These materials often contain milled asbestos with fiber diameters and lengths too small to be resolved by the PLM and the analysis may yield a false negative result.

Hygeia Laboratories Inc. is accredited under the NIST/NVLAP program for asbestos in bulk material by polarized light microscopy and the State of California for asbestos analysis.

Hygeia Laboratories Inc. and its personnel shall not be liable for any misinformation provided to us by the client regarding these samples or for any misuse or interpretation of information supplied by us. Liablility shall extend to providing replicate analyses only. This report must not be used to claim product endorsement by NVLAP or any agency of the US Government. Hygeia will retain samples for a period of three months unless otherwise specified. This report relates only to samples submitted and analyzed. This report may not be reproduced except for in full, without the written approval of this laboratory. Please feel free to contact Hygeia regarding any questions about these results, this report, or the analytical methods employed.

Arturo Casas - Supervisor of Optical Microscopy

Gustavo A. Delgado, Ph.D. - Director

Hygeia Laboratories Inc.

82 W. Sierra Madre Blvd
Sierra Madre, CA 91024-2434
(626) 355-4711 (626) 355-4497 Fax

NIST / NVLAP Lab Code No. 102116-0
California ELAP Certificate No. 1269
New York ELAP Certificate No. 11017

Bulk Sample Analysis Summary

Analytical Method: EPA 600/R-93/116 Point Count - 1000 Points

February 7, 2002

Ms. Greta Galoustian
LA Unified School District
1449 S. San Pedro
Los Angeles, CA 90015

0201-0552 & 0557 Bassett E.S.

Samples Analyzed: 2
Sampler: F. Flores

Hygeia Reference No.: **71089 02 0044**
DateCollected: January 4, 2002
Date Received: January 16, 2002
Date Analyzed: February 7, 2002

Client Sample ID Hygeia Sample ID	Sample Description *Comments*	Detection Limit	Gravimetric Reduction	Analytical Results
0201-0552 716817p	Exterior stucco	0.05%	10% organic 35% acid soluble	<0.1% chrysotile
0201-0557 716818p	Plaster on soffit	0.05%	5% organic 41% acid soluble	<0.1% chrysotile

Microscopist - Rafik Vartanian, Ph.D.

The analyses of the samples in this report were performed using gravimetric matrix reduction and polarized light microscopy (PLM) in accordance with the EPA method 600/R-93/116 July 1993. The asbestos concentration was determined using the semi-quantitative point count method. On a per sample basis, the accuracy and precision of point count results are not known. The result should lie within the statistical limits of variability calculated for standard reference samples routinely analyzed in the laboratory using the point count method. The limit of detection for this analytical method is 0.25 percent using 400 points and 0.10 percent using 1000 points (visual area estimates).

Hygeia recommends trasmission electron microscopy (TEM) analysis on organically bound bulk materials (eg., vinyl floor tile, mastics, roofing materials, joint compounds) when PLM analysis shows undetectable quantities of asbestos. These materials often contain milled asbestos with fiber diameters and lengths too small to be resolved by the PLM and the analysis may yield a false negative result.

Hygeia Laboratories Inc. is accredited under the NIST/NVLAP program for asbestos in bulk material by polarized light microscopy and the State of California for asbestos analysis.

Hygiea Laboratories Inc. and its personnel shall not be liable for any misinformation provided to us by the client regarding these samples or for any misuse or interpretation of information supplied by us. Liablility shall extend to providing replicate analyses only. This report must not be used to claim product endorsement by NVLAP or any agency of the US Government. Hygeia will retain samples for a period of three months unless otherwise specified. This report relates only to samples submitted and analyzed. This report may not be reproduced except for in full, without the written approval of this laboratory.

Please feel free to contact Hygiea regarding any questions about these results, this report, or the analytical methods employed.

Arturo Casas - Supervisor of Optical Microscopy

Gustavo A. Delgado, Ph.D. - Director

FAX: (2)632-041

ASBESTOS BULK SAMPLE SUBMITTAL

Submitted by ACC Environmental Inc. Phone: (310) 312-9642 - ~~fax: (510) 638-8404~~

SITE NAME: Bassett E.S. CODE: 2323 PROJECT: Exterior Painting

SAMPLED BY: Fidel Flores DEPT.: ACC TEL. NO. (213) 632-0470 DATE SAMPLED: 1/4/02

Fill in all information Legibly and Precisely. Sampler should make a copy before submitting to the lab. **BLACK INK ONLY** (Rev. 5/01)

Original to OEHS lab with samples. Lab will FAX a copy to ATU with sample numbers. Results sheet to be FAXED to ATU when completed.

LAB NUMBER	SAMPLE NUMBER	BUILDING NUMBER	BUILDING NAME	ROOM NUMBER AND/OR NAME	LOCATION IN ROOM	MATERIAL TYPE (DESCRIBE)	FRIABLE (CIRCLE)
0201-0561	11	002BAM	Multi-Purpose	Exterior	South	Stucco	YES (NO)
0201-0562	12	002BAM	"		North	"	YES (NO)
0201-0563	13	003BAN	Classroom A	"	East	Window putty	YES (NO)
0201-0564	14	"	"	"	South	"	YES (NO)
0201-0565	15	"	"	"	West	"	YES (NO)
0201-0566	16	"	"	"	East	Stucco	YES (NO)
0201-0567	17	"	"	"	West	"	YES (NO)
0201-0568	18	"	"	Roof Arcade	Roof Arcade West	Arcade Plaster (SAND)	YES (NO)
0201-0569	19	"	"	"	" West	"	YES (NO)
					East		YES NO

CHAIN OF CUSTODY:

DATE:	TIME:	NAME: PRINT AND SIGN	DEPARTMENT/AREA	NO. OF SAMPLES:
1/7/02	9AM	Justin Graham	ACC	9
1/7/02	3:20PM.	Mike Avila	ACC	9
1/7/02	3:20P	Soyca	OBMS	9

Los Angeles Unified School District
Environmental Health and Safety Branch
1449 S. San Pedro St.
Los Angeles, CA 90015
(213) 742-5086

ASBESTOS BULK SAMPLE ANALYSIS
LABORATORY REPORT
BASSETT ST ELEM
2323

NVLAP #1505
METHOD EPA/600/R-93/116 (MOD) JULY 1993
Date Received: 1/7/02

LAUSD Lab#	MIC	Date Analyzed	BUILDING / AREA SAMPLED	MATERIAL DESCRIPTION	CHR %	AM %	OTH %	TOTAL %	MATERIAL BACKGROUND
0201-0561	MS	1/12/02	002DAM, MUTLI., EXT. / S.	NON-HOMOGENEOUS, NON-FRIABLE, OF WHT, STUCCO, GRANULAR	0	0	0	0	CELLULOSE <1%, QUARTZ, PAINT
0201-0562	MS	1/12/02	002DAM, MUTLI., EXT. / N.	NON-HOMOGENEOUS, NON-FRIABLE, OF WHT, STUCCO, GRANULAR	0	0	0	0	CELLULOSE <1%, QUARTZ, CARBONATE
0201-0563	MS	1/12/02	003DAN, CLASS.A, EXT. / E.	NON-HOMOGENEOUS, NON-FRIABLE, OF WHT, PUTTY, COATED PUTTY	0	0	0	0	CELLULOSE <1%, CAULKING, PAINT
0201-0564	MS	1/12/02	003DAN, CLASS.A, EXT. / S.	NON-HOMOGENEOUS, NON-FRIABLE, BGE, PUTTY, COATED PUTTY	1	0	0	1	CELLULOSE <1%, CAULKING, PAINT
0201-0565	MS	1/12/02	003DAN, CLASS.A, EXT. / W.	NON-HOMOGENEOUS, NON-FRIABLE, OF WHT, PUTTY, COATED PUTTY	0	0	0	0	CELLULOSE <1%, CAULKING, PAINT
0201-0566	MS	1/12/02	003DAN, CLASS.A, EXT. / E.	NON-HOMOGENEOUS, NON-FRIABLE, GRY, STUCCO, GRANULAR	<1	0	0	<1	CELLULOSE <1%, QUARTZ, CARBONATE, PAINT
0201-0567	MS	1/12/02	003DAN, CLASS.A, EXT. / W.	NON-HOMOGENEOUS, NON-FRIABLE, GRY, STUCCO, GRANULAR	0	0	0	0	CELLULOSE <1%, QUARTZ, PAINT
0201-0568	MS	1/12/02	003DAN, CLASS.A, RF.ARCADE / ROOF ARCADE W.	NON-HOMOGENEOUS, NON-FRIABLE, OF WHT, SAND PLASTER, GRANULAR/POWDERY	<1	0	0	<1	CELLULOSE <1%, QUARTZ, CARBONATE, PAINT
0201-0569	MS	1/12/02	003DAN, CLASS.A, RF.ARCADE / ROOF ARCADE W.	NON-HOMOGENEOUS, NON-FRIABLE, OF WHT, SAND PLASTER, GRANULAR/POWDERY	<1	0	0	<1	CELLULOSE <1%, QUARTZ, CARBONATE, PAINT

Signature of Lab Supervisor: _____ Signature of Analyst: _____

Note: 0%: No Asbestos Detected; <1%: Asbestos Detected Above 0% and Below or Equal to 1%.
"Quantification done by optical estimate" 1 - 5% considered non-quantifiable.
This report relates to only the material tested.
This report is not used by the LAUSD/EHSB to claim product endorsement by NVLAP or any agency of the U.S. government.
This report may not be reproduced except in its entirety.

Hygeia Laboratories Inc.
82 W. Sierra Madre Blvd
Sierra Madre, CA 91024-2434
(626) 355-4711 (626) 355-4497 Fax

NIST/NVLAP Lab Code 102116-0
California ELAP Certificate No. 1269
New York ELAP Certificate No. 11017

Bulk Sample Analysis Summary

Analytical Method: EPA 600/R-93/116

February 7, 2002

Ms. Greta Galoustian
LA Unified School District
1449 S. San Pedro
Los Angeles, CA 90015
0201-0566, 0568-0569 Bassett E.S.

Samples Analyzed: 3
Sampler: F. Flores

Hygeia Reference No.: **71089 02 0045**
Date Collected: January 4, 2002
Date Received: January 16, 2002
Date Analyzed: February 2, 2002

Client Sample ID / Hygeia Sample ID	Sample Description - color / *Comments*	Asbestos Type, %							Non-Asbestos Constituents, %									
		Asbestos Detected	Chrysotile	Amosite	Crocidolite	Tremolite	Anthophyllite	Actinolite	Cellulose	Fiberglass	Synthetic	Mineral Fillers	Vermiculite	Organic Binders	Paint			QC
0201-0566 716819	Stucco - tan/grey	Yes	< 1									100						
0201-0568 716820	Sand plaster - tan/white	No										60			40			
0201-0569 716821	Sand plaster - tan/white	No										80			20			

Microscopist - Rafik Vartanian, Ph.D.

The analyses of the samples in this report were performed using polarized light microscopy using the EPA method 600/R-93/116. The phase abundances provided are visually estimated and expressed as percent area. Total percentage of sample constituents may total greater than 100 due to trace amounts. The limit of detection for this analytical method is less than one percent. In multilayer samples, unless otherwise specified, the asbestos concentration is reported for the layer where asbestos is found. These results lie within the statistical limits of variability calculated for standard reference samples routinely analyzed in the laboratory. On a per sample basis, the accuracy and precision of the results depend on the type of sample and its asbestos content.

Hygeia recommends trasmission electron microscopy (TEM) analysis on organically bound bulk materials (eg., vinyl floor tile, mastics, roofing materials, joint compounds) when PLM analysis shows undetectable quantities of asbestos. These materials often contain milled asbestos with fiber diameters and lengths too small to be resolved by the PLM and the analysis may yield a false negative result.

Hygeia Laboratories Inc. is accredited under the NIST/NVLAP program for asbestos in bulk material by polarized light microscopy and the State of California for asbestos analysis.

Hygeia Laboratories Inc. and its personnel shall not be liable for any misinformation provided to us by the client regarding these samples or for any misuse or interpretation of information supplied by us. Liability shall extend to providing replicate analyses only. This report must not be used to claim product endorsement by NVLAP or any agency of the US Government. Hygeia will retain samples for a period of three months unless otherwise specified. This report relates only to samples submitted and analyzed. This report may not be reproduced except for in full, without the written approval of this laboratory. Please feel free to contact Hygeia regarding any questions about these results, this report, or the analytical methods employed.

Arturo Casas - Supervisor of Optical Microscopy

Gustavo A. Delgado, Ph.D. - Director

Hygeia Laboratories Inc.

82 W. Sierra Madre Blvd
Sierra Madre, CA 91024-2434
(626) 355-4711 (626) 355-4497 Fax

NIST / NVLAP Lab Code No. 102116-0
California ELAP Certificate No. 1269
New York ELAP Certificate No. 11017

Bulk Sample Analysis Summary

Analytical Method: EPA 600/R-93/116 Point Count - 1000 Points

February 7, 2002

Ms. Greta Galoustian
LA Unified School District
1449 S. San Pedro
Los Angeles, CA 90015

0201-0566, 0568-0569 Bassett E.S.

Samples Analyzed: 3
Sampler: F. Flores

Hygeia Reference No.: **71089 02 0045**
DateCollected: January 4, 2002
Date Received: January 16, 2002
Date Analyzed: February 2, 2002

Client Sample ID Hygeia Sample ID	Sample Description *Comments*	Detection Limit	Gravimetric Reduction	Analytical Results
0201-0566 716819p	Stucco	0.06%	9% organic 30% acid soluble	<0.1% chrysotile
0201-0568 716820p	Sand plaster	0%	15% organic 28% acid soluble	No Asbestos Detected
0201-0569 716821p	Sand plaster	0%	14% organic 26% acid soluble	No Asbestos Detected

Microscopist - Rafik Vartanian, Ph.D.

The analyses of the samples in this report were performed using gravimetric matrix reduction and polarized light microscopy (PLM) in accordance with the EPA method 600/R-93/116 July 1993. The asbestos concentration was determined using the semi-quantitative point count method. On a per sample basis, the accuracy and precision of point count results are not known. The result should lie within the statistical limits of variability calculated for standard reference samples routinely analyzed in the laboratory using the point count method. The limit of detection for this analytical method is 0.25 percent using 400 points and 0.10 percent using 1000 points (visual area estimates).

Hygeia recommends trasmission electron microscopy (TEM) analysis on organically bound bulk materials (eg., vinyl floor tile, mastics, roofing materials, joint compounds) when PLM analysis shows undetectable quantities of asbestos. These materials often contain milled asbestos with fiber diameters and lengths too small to be resolved by the PLM and the analysis may yield a false negative result.

Hygeia Laboratories Inc. is accredited under the NIST/NVLAP program for asbestos in bulk material by polarized light microscopy and the State of California for asbestos analysis.

Hygiea Laboratories Inc. and its personnel shall not be liable for any misinformation provided to us by the client regarding these samples or for any misuse or interpretation of information supplied by us. Liablility shall extend to providing replicate analyses only. This report must not be used to claim product endorsement by NVLAP or any agency of the US Government. Hygeia will retain samples for a period of three months unless otherwise specified. This report relates only to samples submitted and analyzed. This report may not be reproduced except for in full, without the written approval of this laboratory.

Please feel free to contact Hygiea regarding any questions about these results, this report, or the analytical methods employed.

Arturo Casas - Supervisor of Optical Microscopy

Gustavo A. Delgado, Ph.D. - Director

ASBESTOS BULK SAMPLE SUBMITTAL

FAX:(2)632-04,

Submitted by ACC Environmental Inc. Phone: (310) 312-9642 - ~~fax: (510) 638-8404~~

SITE NAME: Bassett E.S. CODE: 2323 PROJECT: Exterior Painting

SAMPLED BY: Fidel Flores DEPT.: ACC TEL. NO. (213) 632-0410 DATE SAMPLED: 1/4/02

Fill in all information Legibly and Precisely. Sampler should make a copy before submitting to the lab. **BLACK INK ONLY** (Rev. 5/01)

Original to OEHS lab with samples. Lab will FAX a copy to ATU with sample numbers. Results sheet to be FAXED to ATU when completed.

LAB NUMBER	SAMPLE NUMBER	BUILDING NUMBER	BUILDING NAME	ROOM NUMBER AND/OR NAME	LOCATION IN ROOM	MATERIAL TYPE (DESCRIBE)	FRIABLE (CIRCLE)
0201-0578	47	006DAN	SANITARY & CLASSROOM D	EXTERIOR	SOUTH EAST	WINDOW PUTTY	YES (NO)
0201-0579	48	″	″	″	NORTH WEST	″	YES (NO)
0201-0580	49	″	″	″	NORTH EAST	″	YES (NO)
0201-0581	50	″	″	EXTERIOR	NORTH	STUCCO	YES (NO)
0201-0582	51	″	″	″	SOUTH	″	YES (NO)
0201-0583	52	004DAN	UTILITY & CLASSROOM B	EXTERIOR	~~NORTH~~ EAST SOUTH	WINDOW PUTTY	YES (NO)
0201-0584	53	″	″	″	SOUTH WEST	″	YES (NO)
0201-0585	54	″	″	″	NORTH EAST	″	YES (NO)
0201-0586	55	004DAN	″	″	SOUTH	STUCCO	YES (NO)
0201-0587	56	″	″	″	NORTH WEST	″	YES (NO)

CHAIN OF CUSTODY: Called Fidel Flores to initial the crossout on the C.O.C Form. GG 1/14/02

DATE:	TIME:	NAME: PRINT AND SIGN	DEPARTMENT/AREA	NO. OF SAMPLES:
1/7/02	9AM	Justin Graham	ACC	10
1/7/02	3:20 PM	Mike Nagao	ACC	10
1/7/02	3:20 P	Seyla	OBMS	10

Los Angeles Unified School District
Environmental Health and Safety Branch
1449 S. San Pedro St.
Los Angeles, CA 90015
(213) 742-5086

ASBESTOS BULK SAMPLE ANALYSIS
LABORATORY REPORT
BASSETT ST ELEM
2323

NVLAP #1505
METHOD EPA/600/R-93/116 (MOD) JULY 1993
Date Received: 1/7/02

LAUSD Lab#	MIC	Date Analyzed	BUILDING / AREA SAMPLED	MATERIAL DESCRIPTION	CHR %	AM %	OTH %	TOTAL %	MATERIAL BACKGROUND
0201-0578	LN	1/12/02	006DAN, SANIT.&CLASS.D, EXT. / S.E.	NON-HOMOGENEOUS, NON-FRIABLE, BGE, PUTTY, SOLID	4	0	0	4	CARBONATES, PAINT
0201-0579	LN	1/12/02	006DAN, SANIT.&CLASS.D, EXT. / N.W.	NON-HOMOGENEOUS, NON-FRIABLE, WHT, PUTTY, SOLID	0	0	0	0	CARBONATES, PAINT
0201-0580	LN	1/12/02	006DAN, SANIT.&CLASS.D, EXT. / N.E.	NON-HOMOGENEOUS, NON-FRIABLE, WHT, PUTTY, SOLID	0	0	0	0	CARBONATES, PAINT
0201-0581	LN	1/12/02	006DAN, SANIT.&CLASS.D, EXT. / N.	NON-HOMOGENEOUS, NON-FRIABLE, BGE/GRY, STUCCO, COATED PLASTER	<1	0	0	<1	BINDER, QUARTZ, PAINT
0201-0582	LN	1/14/02	006DAN, SANIT.&CLASS.D, EXT. / S.	NON-HOMOGENEOUS, NON-FRIABLE, BGE/GRY, STUCCO, COATED PLASTER	<1	0	0	<1	BINDER, QUARTZ, PAINT
01-0583	LN	1/14/02	004DAN, UTIL.&CLASS.B, EXT. / S.E.	NON-HOMOGENEOUS, NON-FRIABLE, GRY, PUTTY, SOLID	2	0	0	2	CARBONATES, PAINT
0201-0584	LN	1/14/02	004DAN, UTIL.&CLASS.B, EXT. / S.W.	NON-HOMOGENEOUS, NON-FRIABLE, GRY, PUTTY, SOLID	2	0	0	2	CARBONATES, PAINT
0201-0585	LN	1/14/02	004DAN, UTIL.&CLASS.B, EXT. / N.E.	NON-HOMOGENEOUS, NON-FRIABLE, GRY, PUTTY, SOLID	2	0	0	2	CARBONATES, PAINT
0201-0586	LN	1/14/02	004DAN, UTIL.&CLASS.B, EXT. / S.	NON-HOMOGENEOUS, NON-FRIABLE, BGE/GRY, STUCCO, COATED PLASTER	<1	0	0	<1	BINDER, QUARTZ, PAINT
0201-0587	LN	1/14/02	004DAN, UTIL.&CLASS.B, EXT. / N.W.	NON-HOMOGENEOUS, NON-FRIABLE, BGE/GRY, STUCCO, COATED PLASTER	<1	0	0	<1	BINDER, QUARTZ, PAINT

Signature of Lab Supervisor: _____ Signature of Analyst: _____

Note: 0%: No Asbestos Detected; <1%: Asbestos Detected Above 0% and Below or Equal to 1%.
"Quantification done by optical estimate" 1 - 5% considered non-quantifiable.
This report relates to only the material tested.
This report is not used by the LAUSD/EHSB to claim product endorsement by NVLAP or any agency of the U.S. government.
This report may not be reproduced except in its entirety.

Hygeia Laboratories Inc.
82 W. Sierra Madre Blvd
Sierra Madre, CA 91024-2434
(626) 355-4711 (626) 355-4497 Fax

NIST/NVLAP Lab Code 102116-0
California ELAP Certificate No. 1269
New York ELAP Certificate No. 11017

Bulk Sample Analysis Summary

Analytical Method: EPA 600/R-93/116

February 7, 2002

Ms. Greta Galoustian
LA Unified School District
1449 S. San Pedro
Los Angeles, CA 90015
0201-0581-0582, 0586-0587 Bassett E.S.

Samples Analyzed: 4
Sampler: F. Flores

Hygeia Reference No.: **71089 02 0047**
Date Collected: January 4, 2002
Date Received: January 16, 2002
Date Analyzed: February 5, 2002

Client Sample ID / Hygeia Sample ID	Sample Description - color / *Comments*	Asbestos Type, %							Non-Asbestos Constituents, %								
		Asbestos Detected	Chrysotile	Amosite	Crocidolite	Tremolite	Anthophyllite	Actinolite	Cellulose	Fiberglass	Synthetic	Mineral Fillers	Vermiculite	Organic Binders	Paint		QC
0201-0581 716824	Exterior stucco - tan	Yes	< 1									95			5		
0201-0582 716825	Exterior stucco - tan	Yes	< 1									95			5		
0201-0586 716826	Exterior stucco - tan	Yes	< 1									95			5		
0201-0587 716827	Exterior stucco - tan	Yes	< 1									95			5		

Microscopist - Rafik Vartanian, Ph.D.

The analyses of the samples in this report were performed using polarized light microscopy using the EPA method 600/R-93/116. The phase abundances provided are visually estimated and expressed as percent area. Total percentage of sample constituents may total greater than 100 due to trace amounts. The limit of detection for this analytical method is less than one percent. In multilayer samples, unless otherwise specified, the asbestos concentration is reported for the layer where asbestos is found. These results lie within the statistical limits of variability calculated for standard reference samples routinely analyzed in the laboratory. On a per sample basis, the accuracy and precision of the results depend on the type of sample and its asbestos content.

Hygeia recommends trasmission electron microscopy (TEM) analysis on organically bound bulk materials (eg., vinyl floor tile, mastics, roofing materials, joint compounds) when PLM analysis shows undetectable quantities of asbestos. These materials often contain milled asbestos with fiber diameters and lengths too small to be resolved by the PLM and the analysis may yield a false negative result.

Hygeia Laboratories Inc. is accredited under the NIST/NVLAP program for asbestos in bulk material by polarized light microscopy and the State of California for asbestos analysis.

Hygeia Laboratories Inc. and its personnel shall not be liable for any misinformation provided to us by the client regarding these samples or for any misuse or interpretation of information supplied by us. Liablility shall extend to providing replicate analyses only. This report must not be used to claim product endorsement by NVLAP or any agency of the US Government. Hygeia will retain samples for a period of three months unless otherwise specified. This report relates only to samples submitted and analyzed. This report may not be reproduced except for in full, without the written approval of this laboratory. Please feel free to contact Hygeia regarding any questions about these results, this report, or the analytical methods employed.

Arturo Casas - Supervisor of Optical Microscopy

Gustavo A. Delgado, Ph.D. - Director

ct

Hygeia Laboratories Inc.

82 W. Sierra Madre Blvd
Sierra Madre, CA 91024-2434
(626) 355-4711 (626) 355-4497 Fax

NIST / NVLAP Lab Code No. 102116-0
California ELAP Certificate No. 1269
New York ELAP Certificate No. 11017

Bulk Sample Analysis Summary

Analytical Method: EPA 600/R-93/116 Point Count - 1000 Points

February 7, 2002

Ms. Greta Galoustian
LA Unified School District
1449 S. San Pedro
Los Angeles, CA 90015

0201-0581-0582, 0586-0587 Bassett E.S.

Samples Analyzed: 4
Sampler: F. Flores

Hygeia Reference No.: **71089 02 0047**
DateCollected: January 4, 2002
Date Received: January 16, 2002
Date Analyzed: February 7, 2002

Client Sample ID Hygeia Sample ID	Sample Description *Comments*	Detection Limit	Gravimetric Reduction	Analytical Results
0201-0581 716824p	Exterior stucco	0.04%	18% organic 42% acid soluble	<0.1% chrysotile
0201-0582 716825p	Exterior stucco	0.06%	12% organic 30% acid soluble	<0.1% chrysotile
0201-0586 716826p	Exterior stucco	0.05%	9% organic 42% acid soluble	<0.1% chrysotile
0201-0587 716827p	Exterior stucco	0.05%	10% organic 41% acid soluble	<0.1% chrysotile

Microscopist - Rafik Vartanian, Ph.D.

The analyses of the samples in this report were performed using gravimetric matrix reduction and polarized light microscopy (PLM) in accordance with the EPA thod 600/R-93/116 July 1993. The asbestos concentration was determined using the semi-quantitative point count method. On a per sample basis, the accuracy precision of point count results are not known. The result should lie within the statistical limits of variability calculated for standard reference samples routinely alyzed in the laboratory using the point count method. The limit of detection for this analytical method is 0.25 percent using 400 points and 0.10 percent using 1000 points (visual area estimates).

Hygeia recommends trasmission electron microscopy (TEM) analysis on organically bound bulk materials (eg., vinyl floor tile, mastics, roofing materials, joint compounds) when PLM analysis shows undetectable quantities of asbestos. These materials often contain milled asbestos with fiber diameters and lengths too small to be resolved by the PLM and the analysis may yield a false negative result.

Hygeia Laboratories Inc. is accredited under the NIST/NVLAP program for asbestos in bulk material by polarized light microscopy and the State of California for asbestos analysis.

Hygiea Laboratories Inc. and its personnel shall not be liable for any misinformation provided to us by the client regarding these samples or for any misuse or interpretation of information supplied by us. Liablility shall extend to providing replicate analyses only. This report must not be used to claim product endorsement by NVLAP or any agency of the US Government. Hygeia will retain samples for a period of three months unless otherwise specified. This report relates only to samples submitted and analyzed. This report may not be reproduced except for in full, without the written approval of this laboratory.

Please feel free to contact Hygiea regarding any questions about these results, this report, or the analytical methods employed.

Arturo Casas - Supervisor of Optical Microscopy

Gustavo A. Delgado, Ph.D. - Director

FAX:(2 632-0412

ASBESTOS BULK SAMPLE SUBMITTAL

Submitted by ACC Environmental Inc. Phone: (310) 312-9642 - ~~fax: (510) 638-8404~~

SITE NAME: Bassett E.S. CODE: 2323 PROJECT: Exterior Painting

SAMPLED BY: Fidel Flores DEPT.: ACC TEL. NO. (213) 632-0410 DATE SAMPLED: 1/4/02

Fill in all information Legibly and Precisely. Sampler should make a copy before submitting to the lab. **BLACK INK ONLY** (Rev. 5/01)

Original to OEHS lab with samples. Lab will FAX a copy to ATU with sample numbers. Results sheet to be FAXED to ATU when completed.

LAB NUMBER	SAMPLE NUMBER	BUILDING NUMBER	BUILDING NAME	ROOM NUMBER AND/OR NAME	LOCATION IN ROOM	MATERIAL TYPE (DESCRIBE)	FRIABLE (CIRCLE)
0201-0516	57	004DAN	UTILITY & CLASSROOM BLDG. B	EXTERIOR	ARCADE North	ARCADE PLASTER	YES NO
0201-0517	58	↓	↓	↓	↓ South	↓	YES NO
0201-0518	59	↓	↓	↓	↓ North	ACOUSTICAL PLASTER	YES NO
0201-0519	60	↓	↓	↓	↓ North	↓	YES NO
0201-0520	61	007DAN	KINDERGARTEN	↓	Exterior North window	Window putty	YES NO
0201-0521	62	↓	↓	↓	Exterior South window	↓	YES NO
0201-0522	63	↓	↓	↓	Exterior West window	↓	YES NO
0201-0523	64	007DAN	Kindergarten	Exterior	West wall	Exterior stucco	YES NO
0201-0524	65	↓	↓	↓	East wall	↓	YES NO
							YES NO

CHAIN OF CUSTODY:

DATE:	TIME:	NAME: PRINT AND SIGN	DEPARTMENT/AREA	NO. OF SAMPLES:
1/7/02	9AM	Justin Graham	ACC	9
1/7/02	3:20 PM	Mike Arauco	ACC	9
1/7/02	3:20	Sevla Ts	OEHS	9

Los Angeles Unified School District
Environmental Health and Safety Branch
1449 S. San Pedro St.
Los Angeles, CA 90015
742-5086

ASBESTOS BULK SAMPLE ANALYSIS
LABORATORY REPORT
BASSETT ST ELEM
2323

NVLAP #1505
METHOD EPA/600/R-93/116 (MOD) JULY 1993
Date Received: 1/7/02

LAUSD Lab#	MIC	Date Analyzed	BUILDING / AREA SAMPLED	MATERIAL DESCRIPTION	CHR %	AM %	OTH %	TOTAL %	MATERIAL BACKGROUND
0201-0516	MS GS	1/12/02	004DAN, UTIL.&CLSS.BLDG.B, EXT / ARCADE N.	NON-HOMOGENEOUS, NON-FRIABLE, OF WHT, PLASTER, GRANULAR/POWDERY	<1	0	0	<1	CELLULOSE <1%, QUARTZ, CARBONATE, PAINT
0201-0517	MS GS	1/12/02	004DAN, UTIL.&CLSS.BLDG.B, EXT / ARCADE S.	NON-HOMOGENEOUS, NON-FRIABLE, OF WHT, PLASTER, GRANULAR/POWDERY	<1	0	0	<1	CELLULOSE <1%, QUARTZ, CARBONATE, PAINT
0201-0518	MS	1/12/02	004DAN, UTIL.&CLSS.BLDG.B, EXT / ARCADE N.	NON-HOMOGENEOUS, NON-FRIABLE, OF WHT, PLASTER, GRANULAR/POWDERY	<1	0	0	<1	CELLULOSE <1%, QUARTZ, CARBONATE, PAINT
0201-0519	MS	1/12/02	004DAN, UTIL.&CLSS.BLDG.B, EXT / ARCADE N.	NON-HOMOGENEOUS, NON-FRIABLE, OF WHT, PLASTER, GRANULAR/POWDERY	<1	0	0	<1	CELLULOSE <1%, QUARTZ, CARBONATE, PAINT
0201-0520	MS	1/12/02	007DAN, KINDER., EXT. / EXT.N.WINDOW	NON-HOMOGENEOUS, NON-FRIABLE, BGE, PUTTY, COATED PUTTY	<1	0	0	<1	CELLULOSE <1%, CAULKING, PAINT
)521	MS	1/12/02	007DAN, KINDER., EXT. / EXT.S.WINDOW	NON-HOMOGENEOUS, NON-FRIABLE, BGE, PUTTY, COATED PUTTY	<1	0	0	<1	CELLULOSE <1%, CAULKING, PAINT
0201-0522	MS	1/12/02	007DAN, KINDER., EXT. / EXT.W.WINDOW	NON-HOMOGENEOUS, NON-FRIABLE, BGE, PUTTY, COATED PUTTY	<1	0	0	<1	CELLULOSE <1%, CAULKING, PAINT
0201-0523	MS	1/12/02	007DAN, KINDER., EXT. / W.WALL	NON-HOMOGENEOUS, NON-FRIABLE, GRY, EXTERIOR STUCCO, GRANULAR/POWDERY	<1	0	0	<1	CELLULOSE <1%, QUARTZ, CARBONATE, PAINT
0201-0524	MS	1/12/02	007DAN, KINDER., EXT. / E.WALL	NON-HOMOGENEOUS, NON-FRIABLE, OF WHT, EXTERIOR STUCCO, GRANULAR/POWDERY	<1	0	0	<1	CELLULOSE <1%, QUARTZ, CARBONATE, PAINT

Signature of Lab Supervisor: B Galoustian Signature of Analyst: _____

Note: 0%: No Asbestos Detected; <1%: Asbestos Detected Above 0% and Below or Equal to 1%.
"Quantification done by optical estimate" 1 - 5% considered non-quantifiable.
This report relates to only the material tested.
This report is not used by the LAUSD/EHSB to claim product endorsement by NVLAP or any agency of the U.S. government.
This report may not be reproduced except in its entirety.

Hygeia Laboratories Inc.
82 W. Sierra Madre Blvd
Sierra Madre, CA 91024-2434
(626) 355-4711 (626) 355-4497 Fax

NIST/NVLAP Lab Code 102116-0
California ELAP Certificate No. 1269
New York ELAP Certificate No. 11017

Bulk Sample Analysis Summary

Analytical Method: EPA 600/R-93/116

February 7, 2002

Ms. Greta Galoustian
LA Unified School District
1449 S. San Pedro
Los Angeles, CA 90015

0201-0516-0519 & 0523-0524 Bassett E.S.

Samples Analyzed: 6
Sampler: F. Flores

Hygeia Reference No.: **71089 02 0042**
Date Collected: January 4, 2002
Date Received: January 16, 2002
Date Analyzed: February 2, 2002

Client Sample ID / Hygeia Sample ID	Sample Description - color / *Comments*	Asbestos Type, %							Non-Asbestos Constituents, %									
		Asbestos Detected	Chrysotile	Amosite	Crocidolite	Tremolite	Anthophyllite	Actinolite	Cellulose	Fiberglass	Synthetic	Mineral Fillers	Vermiculite	Organic Binders	Paint			QC
0201-0516 716807	Arcade plaster - tan	Yes	< 1									95			5			
0201-0517 716808	Arcade plaster - tan	Yes	< 1									95			5			
0201-0518 716809	Acoustical plaster - tan	Yes	< 1									95			5			
0201-0519 716810	Acoustical plaster - tan	Yes	< 1									95			5			
0201-0523 716811	Exterior stucco - grey/tan	Yes	< 1									95			5			
0201-0524 716812	Exterior stucco - tan/white	Yes	< 1									95			5			

Microscopist - Guillermo Hernandez

The analyses of the samples in this report were performed using polarized light microscopy using the EPA method 600/R-93/116. The phase abundances provided are visually estimated and expressed as percent area. Total percentage of sample constituents may total greater than 100 due to trace amounts. The limit of detection for this analytical method is less than one percent. In multilayer samples, unless otherwise specified, the asbestos concentration is reported for the layer where asbestos is found. These results lie within the statistical limits of variability calculated for standard reference samples routinely analyzed in the laboratory. On a per sample basis, the accuracy and precision of the results depend on the type of sample and its asbestos content.

Hygeia recommends trasmission electron microscopy (TEM) analysis on organically bound bulk materials (eg., vinyl floor tile, mastics, roofing materials, joint compounds) when PLM analysis shows undetectable quantities of asbestos. These materials often contain milled asbestos with fiber diameters and lengths too small to be resolved by the PLM and the analysis may yield a false negative result.

Hygeia Laboratories Inc. is accredited under the NIST/NVLAP program for asbestos in bulk material by polarized light microscopy and the State of California for asbestos analysis.

Hygeia Laboratories Inc. and its personnel shall not be liable for any misinformation provided to us by the client regarding these samples or for any misuse or interpretation of information supplied by us. Liablility shall extend to providing replicate analyses only. This report must not be used to claim product endorsement by NVLAP or any agency of the US Government. Hygeia will retain samples for a period of three months unless otherwise specified. This report relates only to samples submitted and analyzed. This report may not be reproduced except for in full, without the written approval of this laboratory. Please feel free to contact Hygeia regarding any questions about these results, this report, or the analytical methods employed.

Arturo Casas - Supervisor of Optical Microscopy

Gustavo A. Delgado, Ph.D. - Director

Hygeia Laboratories Inc.
82 W. Sierra Madre Blvd
Sierra Madre, CA 91024-2434
(626) 355-4711 (626) 355-4497 Fax

NIST / NVLAP Lab Code No. 102116-0
California ELAP Certificate No. 1269
New York ELAP Certificate No. 11017

Bulk Sample Analysis Summary

Analytical Method: EPA 600/R-93/116 Point Count - 1000 Points

February 7, 2002

Ms. Greta Galoustian
LA Unified School District
1449 S. San Pedro
Los Angeles, CA 90015
0201-0516-0519 & 0523-0524 Bassett E.S.

Samples Analyzed: 6
Sampler: F. Flores

Hygeia Reference No.: **71089 02 0042**
DateCollected: January 4, 2002
Date Received: January 16, 2002
Date Analyzed: February 2, 2002

Client Sample ID Hygeia Sample ID	Sample Description *Comments*	Detection Limit	Gravimetric Reduction	Analytical Results
0201-0516 716807p	Arcade plaster	0.06%	11% organic 27% acid soluble	<0.1% chrysotile
0201-0517 716808p	Arcade plaster	0.06%	10% organic 27% acid soluble	<0.1% chrysotile
0201-0518 716809p	Acoustical plaster	0.06%	11% organic 26% acid soluble	<0.1% chrysotile
0201-0519 716810p	Acoustical plaster	0.06%	12% organic 26% acid soluble	<0.1% chrysotile
0201-0523 716811p	Exterior stucco	0.07%	4% organic 25% acid soluble	<0.1% chrysotile
0201-0524 716812p	Exterior stucco	0.05%	9% organic 37% acid soluble	<0.1% chrysotile

Guillermo Hernandez
Microscopist - Guillermo Hernandez

The analyses of the samples in this report were performed using gravimetric matrix reduction and polarized light microscopy (PLM) in accordance with the EPA method 600/R-93/116 July 1993. The asbestos concentration was determined using the semi-quantitative point count method. On a per sample basis, the accuracy and precision of point count results are not known. The result should lie within the statistical limits of variability calculated for standard reference samples routinely analyzed in the laboratory using the point count method. The limit of detection for this analytical method is 0.25 percent using 400 points and 0.10 percent using 1000 points (visual area estimates).

Hygeia recommends trasmission electron microscopy (TEM) analysis on organically bound bulk materials (eg., vinyl floor tile, mastics, roofing materials, joint compounds) when PLM analysis shows undetectable quantities of asbestos. These materials often contain milled asbestos with fiber diameters and lengths too small to be resolved by the PLM and the analysis may yield a false negative result.

Hygeia Laboratories Inc. is accredited under the NIST/NVLAP program for asbestos in bulk material by polarized light microscopy and the State of California for asbestos analysis.

Hygiea Laboratories Inc. and its personnel shall not be liable for any misinformation provided to us by the client regarding these samples or for any misuse or interpretation of information supplied by us. Liablility shall extend to providing replicate analyses only. This report must not be used to claim product endorsement by NVLAP or any agency of the US Government. Hygeia will retain samples for a period of three months unless otherwise specified. This report relates only to samples submitted and analyzed. This report may not be reproduced except for in full, without the written approval of this laboratory.

Please feel free to contact Hygiea regarding any questions about these results, this report, or the analytical methods employed.

Arturo Casas - Supervisor of Optical Microscopy

Gustavo A. Delgado, Ph.D. - Director

Bassett Street School

Emergency Exit Map

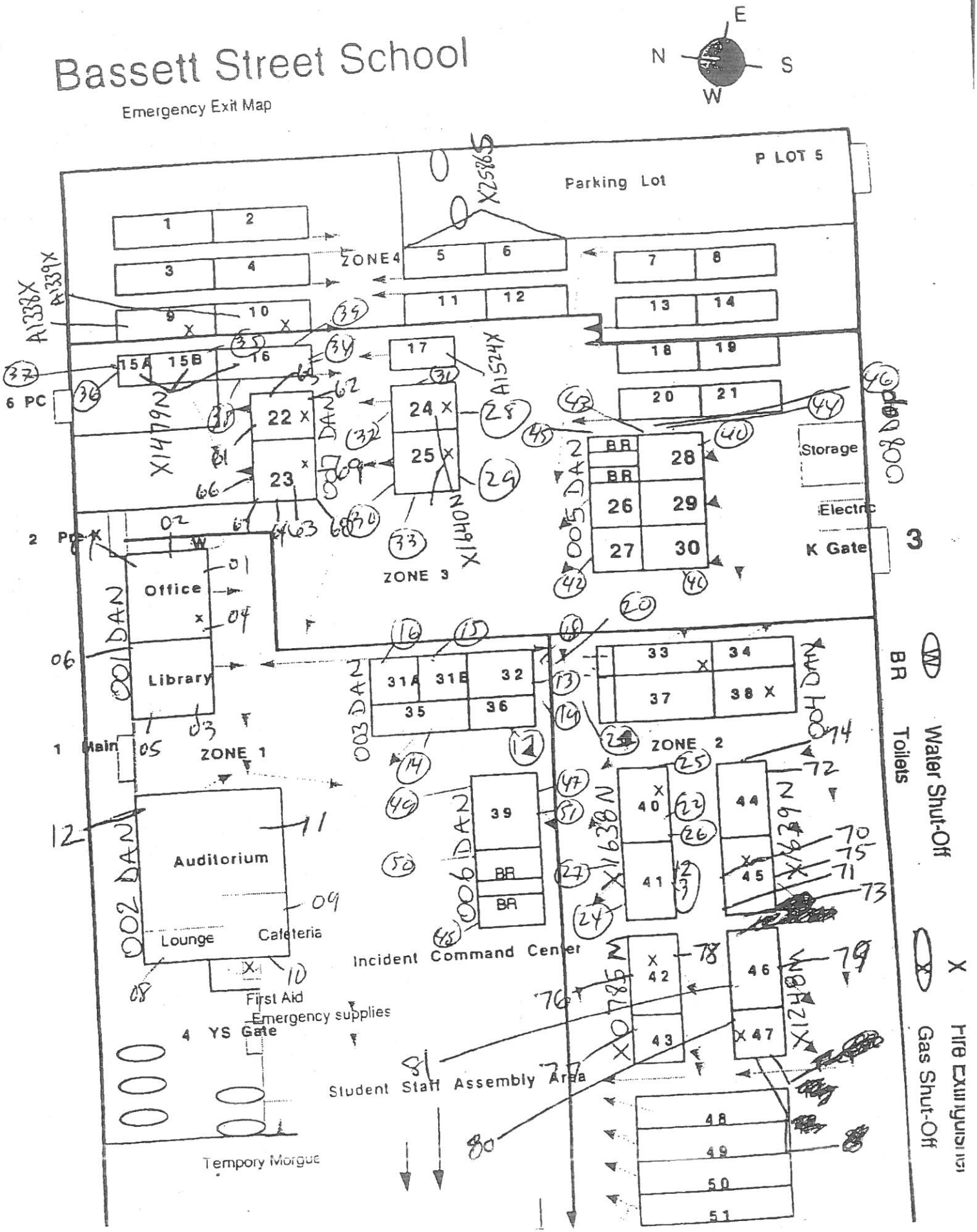

ASBESTOS BULK SAMPLE SUBMITTAL

SITE NAME: Bassett Elementary School CODE: 2323 PROJECT: Earthquake Damage Repair

SAMPLED BY: Kasdi Saat & Byrant Elberts DEPT.: ATU TEL. NO.: X5403 DATE SAMPLED: 11-18-95

Fill in all information Legibly and Precisely. Sampler should make a copy before submitting to the lab. **DO NOT USE PENCIL** (Rev. 7/95)

Original to EHSB lab with samples. Lab will FAX a copy to ATU with sample numbers. Results sheet to be FAXED to ATU when completed.

LAB NUMBER	SAMPLE NUMBER	BUILDING NUMBER	BUILDING NAME	JOB NUMBER	DSR NUMBER	ROOM NUMBER AND/OR NAME	LOCATION IN ROOM	MATERIAL TYPE (DESCRIBE)	FRIABLE (CIRCLE)
992834	X-34	1D-N	Main Bldg	6303783	13060	Roof Overhang	S/East	Ceiling Stucco	YES (NO)
992835	X-35	2D-N	Multi-Purpose	6303784	42322	↓	S/Center	↓	YES (NO)
992836	X-36	3D-N	Bldg "A"	6303785	13064	↓	S/East	↓	YES (NO)
992837	X-37	4D-N	Bldg "B"	6303786	13065	↓	N/East	↓	YES (NO)
992838	X-38	5D-N	Bldg "C"	6303787	13066	↓	N/West	↓	YES (NO)
992839	X-39	6D-N	Bldg "D"	6303788	13069	↓	S/East	↓	YES (NO)
992840	X-40	7D-N	Kinder-garten	6303789	13078	↓	N/West	↓	YES (NO)
992841	X-41	1D-N	Main Bldg	6303783	13060	Exterior Wall	N/East	Exterior Stucco	YES (NO)
992842	X-42	2D-N	Multi-Purpose	6303784	42322	↓	S/West	↓	YES (NO)
992843	X-43	3D-N	Bldg "A"	6303785	13064	↓	N/East	↓	YES (NO)
992844	X-44	4D-N	Bldg "B"	6303786	13065	↓	S/East	↓	YES (NO)

CHAIN OF CUSTODY:

DATE:	TIME:	NAME: PRINT AND SIGN	DEPARTMENT/AREA	NO. OF SAMPLES:
11-18-95	11:30 Am	Kasdi Saat / Kasdi Saat	ATU/19	11
11-20-95	10:47 Am	Patty Filous / Patty Filous	EHSB	11

L.A.U.S.D.
Environmental Health and Safety Branch
1449 S. San Pedro St. Rm. 215
Angeles CA 90015
3) 743-5086

ASBESTOS BULK SAMPLE ANALYSIS
LABORATORY REPORT
BASSETT ST ELEM
2323

METHOD EPA/600/R-93/116 (MOD) JULY 1993

LAUSD Lab #	Date Submitted	Mic pst	Date Analyzed	Material Source	Material Description	Chr %	Am %	Oth %	Tot %	Material Background
992834A	11/20/95	CH	12/11/95	1D-N,MAIN,13060,ROOF SO/E,CEIL.STUCCO,CTG	NON-HOMOGENEOUS, COATED MATERIAL, BEIGE, NON-FRIABLE	0	0	0	0	CALCITE PIGMENT
992834B	11/20/95	CH	12/11/95	1D-N,MAIN,13060,ROOF SO/E,CEILING STUCCO	NON-HOMOGENEOUS, CEMENTITIOUS, GRAY, NON-FRIABLE	0	0	0	0	CALCITE QUARTZ
992835A	11/20/95	CH	12/11/95	2D-N,MLTI,42322,ROOF SO/C,CEIL.STUCCO.CTG	NON-HOMOGENEOUS, COATED MATERIAL, BEIGE, NON-FRIABLE	0	0	0	0	CALCITE PIGMENT
992835B	11/20/95	CH	12/11/95	2D-N,MLTI,42322,ROOF SO/C,CEILING STUCCO	NON-HOMOGENEOUS, CEMENTITIOUS, GRAY, NON-FRIABLE	0	0	0	0	CALCITE QUARTZ
992836A	11/20/95	CH	12/11/95	3D-N,"A", 13064,ROOF SO/E.CEIL.STUCCO.CTG	NON-HOMOGENEOUS, COATED MATERIAL, BEIGE, NON-FRIABLE	0	0	0	0	CALCITE PIGMENT
992836B	11/20/95	CH	12/11/95	3D-N,"A", 13064,ROOF SO/EAST, CEIL.STUCCO	NON-HOMOGENEOUS, CEMENTITIOUS, GRAY, NON-FRIABLE	0	0	0	0	CALCITE QUARTZ
992837A	11/20/95	CH	12/11/95	4D-N,"B",13065, ROOF NO/E,CEIL.STUCCO,CTG	NON-HOMOGENEOUS, COATED MATERIAL, BEIGE, NON-FRIABLE	0	0	0	0	CALCITE PIGMENT
992837B	11/20/95	CH	12/11/95	4D-N,"B",13065, ROOF NO/EAST, CEIL.STUCCO	NON-HOMOGENEOUS, CEMENTITIOUS, GRAY, NON-FRIABLE	0	0	0	0	CALCITE QUARTZ
992838A	11/20/95	CH	12/11/95	5D-N,"C",13066, ROOF NO/W,CEIL.STUCCO,CTG	NON-HOMOGENEOUS, COATED MATERIAL, BEIGE, NON-FRIABLE	0	0	0	0	CALCITE PIGMENT
992838B	11/20/95	CH	12/11/95	5D-N,"C",13066, ROOF NO/WEST, CEIL.STUCCO	NON-HOMOGENEOUS, CEMENTITIOUS, GRAY, NON-FRIABLE	0	0	0	0	CALCITE QUARTZ
992839A	11/20/95	CH	12/11/95	6D-N,"D",13069, ROOF SO/E,CEIL.STUCCO,CTG	NON-HOMOGENEOUS, COATED MATERIAL, BEIGE, NON-FRIABLE	0	0	0	0	CALCITE PIGMENT

gnature of Lab Supervisor: Delanne Bryant Signature of Analyst: [illegible]

TE: 0% : No Asbestos Detected; < 1% : Asbestos Detected Above 0% and Below or Equal to 1%.
"Quantitation done by optical estimate" 1 - 5% considered non-quantifiable.
This report relates to only the material tested.
This report is not used by the LAUSD/EHSB to claim product endorsement by NVLAP or any agency or the U.S. government.

L.A.U.S.D.
Environmental Health and Safety Branch
1449 S. San Pedro St. Rm. 215
s Angeles CA 90015
3) 743-5086

ASBESTOS BULK SAMPLE ANALYSIS
LABORATORY REPORT
BASSETT ST ELEM
2323

METHOD EPA/600/R-93/116 (MOD) JULY 1993

LAUSD Lab #	Date Submitted	Mic pst	Date Analyzed	Material Source	Material Description	Chr %	Am %	Oth %	Tot %	Material Background
992839B	11/20/95	CH	12/11/95	6D-N,"D",13069, ROOF SO/EAST, CEIL.STUCCO	NON-HOMOGENEOUS, CEMENTITIOUS, GRAY, NON-FRIABLE	0	0	0	0	CALCITE QUARTZ
992840A	11/20/95	CH	12/11/95	7D-N,KNDR,13078,ROOF NO/W,CEIL.STUCCO,CTG	NON-HOMOGENEOUS, COATED MATERIAL, BEIGE, NON-FRIABLE	0	0	0	0	CALCITE PIGMENT
992840B	11/20/95	CH	12/11/95	7D-N,KNDR,13078,ROOF NO/WEST, CEIL.STUCCO	NON-HOMOGENEOUS, CEMENTITIOUS, GRAY, NON-FRIABLE	0	0	0	0	CALCITE QUARTZ
992841A	11/20/95	CH	12/11/95	1D-N,MAIN,13060,EXTR WL,N/E,EX.STUCCO,CTG	NON-HOMOGENEOUS, COATED MATERIAL, BEIGE, NON-FRIABLE	0	0	0	0	CALCITE PIGMENT
992841B	11/20/95	CH	12/11/95	1D-N,MAIN,13060,EXTR WALL,NO/E,EXT.STUCCO	NON-HOMOGENEOUS, CEMENTITIOUS, GRAY, NON-FRIABLE	0	0	0	0	CALCITE QUARTZ
992842A	11/20/95	CH	12/11/95	2D-N,MLTI,42322,EXTR WL,S/W,EX.STUCCO,CTG	NON-HOMOGENEOUS, COATED MATERIAL, BEIGE, NON-FRIABLE	0	0	0	0	CALCITE PIGMENT
992842B	11/20/95	CH	12/11/95	2D-N,MLTI,42322,EXTR WALL,SO/W,EXT.STUCCO	NON-HOMOGENEOUS, CEMENTITIOUS, GRAY, NON-FRIABLE	0	0	0	0	CALCITE QUARTZ
992843A	11/20/95	CH	12/11/95	3D-N,"A",13064,EXTR WL,N/E,EX.STUCCO,CTG	NON-HOMOGENEOUS, COATED MATERIAL, BEIGE, NON-FRIABLE	0	0	0	0	CALCITE PIGMENT
992843B	11/20/95	CH	12/11/95	3D-N,"A",13064,EXTER WALL,NO/E,EXT.STUCCO	NON-HOMOGENEOUS, CEMENTITIOUS, GRAY, NON-FRIABLE	0	0	0	0	CALCITE QUARTZ
992844A	11/20/95	CH	12/11/95	4D-N,"B",13065,EXTER WL,S/E,EX.STUCCO,CTG	NON-HOMOGENEOUS, COATED MATERIAL, BEIGE, NON-FRIABLE	0	0	0	0	CALCITE PIGMENT
992844B	11/20/95	CH	12/11/95	4D-N,"B",13065,EXTER WALL,SO/E,EXT.STUCCO	NON-HOMOGENEOUS, CEMENTITIOUS, GRAY, NON-FRIABLE	0	0	0	0	CALCITE QUARTZ

Signature of Lab Supervisor: Dee Anne Bryant Signature of Analyst: [illegible]

OTE: 0% : No Asbestos Detected; < 1% : Asbestos Detected Above 0% and Below or Equal to 1%.
"Quantitation done by optical estimate" 1 - 5% considered non-quantifiable.
This report relates to only the material tested.
This report is not used by the LAUSD/EHSB to claim product endorsement by NVLAP or any agency or the U.S. government.

ASBESTOS BULK SAMPLE SUBMITTAL

SITE NAME: Bassett Elementary School CODE: 2323 PROJECT: Earthquake Damage Repair

SAMPLED BY: Kasdi Saat & Bryant Elberts DEPT.: ATU TEL. NO.: X5403 DATE SAMPLED: 11-18-95

Fill in all information Legibly and Precisely. Sampler should make a copy before submitting to the lab. **DO NOT USE PENCIL** (Rev. 7/95)

Original to EHSB lab with samples. Lab will FAX a copy to ATU with sample numbers. Results sheet to be FAXED to ATU when completed.

LAB NUMBER	SAMPLE NUMBER	BUILDING NUMBER	BUILDING NAME	JOB NUMBER	DSR NUMBER	ROOM NUMBER AND/OR NAME	LOCATION IN ROOM	MATERIAL TYPE (DESCRIBE)	FRIABLE (CIRCLE)
992845	X-45	6D-N	Bldg "D"	6303788	13069	Exterior Wall	N/East	Exterior Stucco	YES (NO)
992846	X-46	7D-N	Kinder-garten	6303789	13078	↓	S/Center	↓	YES (NO)
992847	X-47	1D-N	Main Bldg	6303783	13060	Library	S/East	sand textured plaster on soffit	YES (NO)
992848	X-48	3D-N	Bldg "A"	6303785	13064	Room 10A	N/East	↓	YES (NO)
992849	X-49	4D-N	Bldg "B"	6303786	13065	Room 16	E/Center	↓	YES (NO)
992850	X-50	5D-N	Bldg "C"	6303787	13066	Room 6	N/West	↓	YES (NO)
	~~X-51~~								YES (NO)
992851	X-52	7D-N	Kinder-garten	6303789	13078	Room 2	N/West	sand textured plaster on soffits	YES (NO)
992852	X-53	1D-N	Main Bldg	6303783	13060	Library	N/West	sand textured wall plaster	YES (NO)
992853	X-54	↓	↓	↓	↓	Library	S/West	↓	YES (NO)
992854	X-55	↓	↓	↓	↓	Supply Rm	S/Center	↓	YES (NO)

CHAIN OF CUSTODY:

DATE:	TIME:	NAME: PRINT AND SIGN	DEPARTMENT/AREA	NO. OF SAMPLES:
11-18-95	3:00pm	Kasdi Saat Kasdi Saat	ATU/19	10
11-20-95	10:48am	Patty Filous / Patty Filous	EHSB	10

L.A.U.S.D.
Environmental Health and Safety Branch
1449 S. San Pedro St. Rm. 215
Los Angeles CA 90015
) 743-5086

ASBESTOS BULK SAMPLE ANALYSIS
LABORATORY REPORT
BASSETT ST ELEM
2323

METHOD EPA/600/R-93/116 (MOD) JULY 1993

LAUSD Lab #	Date Submitted	Mic pst	Date Analyzed	Material Source	Material Description	Chr %	Am %	Oth %	Tot %	Material Background
992845A	11/20/95	CH	12/12/95	6D-N,"D",13069,EX.WL N/E,EXTR.STUCCO,COAT	NON-HOMOGENEOUS, COATED MATERIAL, BEIGE, NON-FRIABLE	0	0	0	0	CALCITE PIGMENT
992845B	11/20/95	CH	12/12/95	6D-N,"D",13069,EX.WL NO/EAST,EXTER.STUCCO	NON-HOMOGENEOUS, CEMENTITIOUS, GREY, NON-FRIABLE	0	0	0	0	CALCITE QUARTZ
992846A	11/20/95	CH	12/12/95	7D-N,KNDR,13078,EXTR S/C,EXTR.STUCCO,COAT	NON-HOMOGENEOUS, COATED MATERIAL, BEIGE, NON-FRIABLE	0	0	0	0	CALCITE PIGMENT
992846B	11/20/95	CH	12/12/95	7D-N,KNDR,13078,EXTR SO/CENT,EXTER.STUCCO	NON-HOMOGENEOUS, CEMENTITIOUS, GRAY, NON-FRIABLE	0	0	0	0	CALCITE QUARTZ
992847A	11/20/95	CH	12/12/95	1D-N,MAIN,13060,LBRY SO/E,PLASTER,COATING	NON-HOMOGENEOUS, COATED MATERIAL, YELLOW, NON-FRIABLE	0	0	0	0	CALCITE PIGMENT
47B	11/20/95	CH	12/12/95	1D-N,MAIN,13060,LBRY SOUTH/EAST, PLASTER	NON-HOMOGENEOUS, CEMENTITIOUS, GRAY, NON-FRIABLE	0	0	0	0	CALCITE QUARTZ
992848A	11/20/95	CH	12/12/95	3D-N,"A",13064,RM10A NO/E,PLASTER,COATING	NON-HOMOGENEOUS, COATED MATERIAL, YELLOW, NON-FRIABLE	0	0	0	0	CALCITE PIGMENT
992848B	11/20/95	CH	12/12/95	3D-N,"A",13064,RM10A NORTH/EAST,PLASTER	NON-HOMOGENEOUS, CEMENTITIOUS, BEIGE, NON-FRIABLE	0	0	0	0	CALCITE QUARTZ
992849A	11/20/95	CH	12/12/95	4D-N,"B",13065,RM.16 E/CT,PLASTER,COATING	NON-HOMOGENEOUS, COATED MATERIAL, BEIGE, NON-FRIABLE	0	0	0	0	CALCITE PIGMENT
992849B	11/20/95	CH	12/12/95	4D-N,"B",13065,RM.16 EAST/CENTER,PLASTER	NON-HOMOGENEOUS, CEMENTITIOUS, GRAY, NON-FRIABLE	0	0	0	0	CALCITE QUARTZ
992850A	11/20/95	CH	12/12/95	5D-N,"C",13066,RM. 6 NO/W,PLASTER,COATING	NON-HOMOGENEOUS, COATED MATERIAL, BEIGE, NON-FRIABLE	0	0	0	0	CALCITE PIGMENT

Signature of Lab Supervisor: Deelanne Bryant Signature of Analyst: [illegible]

: 0% : No Asbestos Detected; <1% : Asbestos Detected Above 0% and Below or Equal to 1%.
"Quantitation done by optical estmate" 1 - 5% considered non-quantifiable.
This report relates to only the material used.
This report is not used by the LAUSD/EHSB to claim product endorsement by NVLAP or any agency of the U.S. government.

L.A.U.S.D.
Environmental Health and Safety Branch
1449 S. San Pedro St. Rm. 215
Los Angeles CA 90015
) 743-5086

ASBESTOS BULK SAMPLE ANALYSIS
LABORATORY REPORT
BASSETT ST ELEM
2323

METHOD EPA/600/R-93/116 (MOD) JULY 1993

LAUSD Lab #	Date Submitted	Mic pst	Date Analyzed	Material Source	Material Description	Chr %	Am %	Oth %	Tot %	Material Background
992850B	11/20/95	CH	12/12/95	5D-N,"C",13066,RM. 6 NORTH/WEST,PLASTER	NON-HOMOGENEOUS, CEMENTITIOUS, BEIGE, NON-FRIABLE	0	0	0	0	CALCITE QUARTZ
992851A	11/20/95	CH	12/12/95	7D-N,KNDR,13078,RM.2 NO/W,PLASTER,COATING	NON-HOMOGENEOUS, COATED MATERIAL, WHITE, NON-FRIABLE	0	0	0	0	CALCITE PIGMENT
992851B	11/20/95	CH	12/12/95	7D-N,KNDR,13078,RM.2 NORTH/WEST,PLASTER	NON-HOMOGENEOUS, CEMENTITIOUS, BEIGE, NON-FRIABLE	0	0	0	0	CALCITE QUARTZ
992852A	11/20/95	CH	12/12/95	1D-N,MAIN,13060,LBRY N/W,PLASTER WALL,CTG	NON-HOMOGENEOUS, COATED MATERIAL, WHITE, NON-FRIABLE	0	0	0	0	CALCITE PIGMENT
992852B	11/20/95	CH	12/12/95	1D-N,MAIN,13060,LBRY NO/WEST,PLASTER WALL	NON-HOMOGENEOUS, CEMENTITIOUS, BEIGE, NON-FRIABLE	0	0	0	0	CALCITE QUARTZ
53A	11/20/95	CH	12/12/95	1D-N,MAIN,13060,LBRY S/W,PLASTER WALL,CTG	NON-HOMOGENEOUS, COATED MATERIAL, WHITE, NON-FRIABLE	0	0	0	0	CALCITE PIGMENT
992853B	11/20/95	CH	12/12/95	1D-N,MAIN,13060,LBRY SO/WEST,PLASTER WALL	NON-HOMOGENEOUS, CEMENTITIOUS, GRAY, NON-FRIABLE	0	0	0	0	CALCITE QUARTZ
992854A	11/20/95	CH	12/12/95	1D-N,MAIN,13060,SPLY S/C,PLASTER WALL,CTG	NON-HOMOGENEOUS, COATED MATERIAL, WHITE, NON-FRIABLE	0	0	0	0	CALCITE PIGMENT
992854B	11/20/95	CH	12/12/95	1D-N,MAIN,13060,SPLY SO/CENT,PLASTER WALL	NON-HOMOGENEOUS, CEMENTITIOUS, GRAY, NON-FRIABLE	0	0	0	0	CALCITE QUARTZ

nature of Lab Supervisor: Delanne Bryant Signature of Analyst: [illegible]

: 0% : No Asbestos Detected; <1% : Asbestos Detected Above 0% and Below or Equal to 1%.
"Quantitation done by optical estmate" 1 - 5% considered non-quantifiable.
This report relates to only the material used.
This report is not used by the LAUSD/EHSB to claim product endorsement by NVLAP or any agency of the U.S. government.

ASBESTOS BULK SAMPLE SUBMITTAL

SITE NAME: Bassett Elementary School CODE: 2323 PROJECT: Earthquake Damage Repair

SAMPLED BY: Kasdi Saat & Byrant Elberts DEPT.: ATU TEL. NO.: X5403 DATE SAMPLED: 11-18-95

Fill in all information Legibly and Precisely. Sampler should make a copy before submitting to the lab. **DO NOT USE PENCIL** (Rev. 7/95)

Original to EHSB lab with samples. Lab will FAX a copy to ATU with sample numbers. Results sheet to be FAXED to ATU when completed.

LAB NUMBER	SAMPLE NUMBER	BUILDING NUMBER	BUILDING NAME	JOB NUMBER	DSR NUMBER	ROOM NUMBER AND/OR NAME	LOCATION IN ROOM	MATERIAL TYPE (DESCRIBE)	FRIABLE (CIRCLE)
992855	X-56	3D-N	Bldg "A"	6303785	13064	Room 12	S/Center	Sand textured wall plaster	YES NO
992856	X-57	↓	↓	↓	↓	Room 11	East wall - N/End	↓	YES NO
992857	X-58	↓	↓	↓	↓	Room 13	S/wall - W/end	↓	YES NO
992858	X-59	5D-N	Bldg "C"	6303787	13066	Room 6	N/West	↓	YES NO
992859	X-60	↓	↓	↓	↓	Room 5	S/wall - E/End	↓	YES NO
992860	X-61	↓	↓	↓	↓	Room 8	N/wall - W/End	↓	YES NO
	X-62								YES NO
	X-63								YES NO
	X-64								YES NO
992861	X-65	7D-N	Kinder-garten	6303789	13078	Room 2	N/East	Sand textured wall plaster	YES NO
992862	X-66	↓	↓	↓	↓	Room 1	S/East	↓	YES NO

CHAIN OF CUSTODY:

DATE:	TIME:	NAME: PRINT AND SIGN	DEPARTMENT/AREA	NO. OF SAMPLES:
11-18-95	3:00Pm	Kasdi Saat Kasdi Saat	ATU/19	8
11-20-95	11:50Am	Patty Filous / Patty Filous	EHSB	8

L.a.U.S.D.
Environmental Health and Safety Branch
1449 S. San Pedro St. Rm. 215
Angeles CA 90015
) 743-5086

ASBESTOS BULK SAMPLE ANALYSIS
LABORATORY REPORT
BASSETT ST ELEM
2323

METHOD EPA/600/R-93/116 (MOD) JULY 1993

LAUSD Lab #	Date Submitted	Mic pst	Date Analyzed	Material Source	Material Description	Chr %	Am %	Oth %	Tot %	Material Background
992855A	11/20/95	LG	12/11/95	3D-N,"A",13064,RM.12 SO/CENT,WALL PLASTER	NON-HOMOGENEOUS, COATED MATERIAL, WHT/GREY,NON-FRIABLE	0	0	0	0	WOLLASTONITE QUARTZ,PAINT
992855B	11/20/95	LG	12/11/95	3D-N,"A",13064,RM.12 SO/CENT,WALL PLASTER	NON-HOMOGENEOUS, CEMENTITIOUS, GREY, NON-FRIABLE	0	0	0	0	1% CELLULOSE VERMICULITE QUARTZ
992856A	11/20/95	LG	12/11/95	3D-N,"A",13064,RM.11 EAST/NO,WALL PLASTER	NON-HOMOGENEOUS, COATED MATERIAL, WHT/GREY,NON-FRIABLE	0	0	0	0	QUARTZ,PAINT WOLLASTONITE
992856B	11/20/95	LG	12/11/95	3D-N,"A",13064,RM.11 EAST/NO,WALL PLASTER	NON-HOMOGENEOUS, CEMENTITIOUS, GREY, NON-FRIABLE	0	0	0	0	1% CELLULOSE WOLLASTONITE QUARTZ,VERMICULITE
992857A	11/20/95	LG	12/11/95	3D-N,"A",13064,RM.13 SO/WEST,WALL PLASTER	NON-HOMOGENEOUS, COATED MATERIAL, WHT/GREY,NON-FRIABLE	0	0	0	0	QUARTZ,PAINT WOLLASTONITE
2857B	11/20/95	LG	12/11/95	3D-N,"A",13064,RM.13 SO/WEST,WALL PLASTER	NON-HOMOGENEOUS, CEMENTITIOUS, GREY, NON-FRIABLE	0	0	0	0	1% CELLULOSE WOLLASTONITE VERMICULITE,QUARTZ
992858A	11/20/95	LG	12/11/95	5D-N,"C",13066,RM. 6 NO/WEST,WALL PLASTER	NON-HOMOGENEOUS, COATED MATERIAL, WHT/GREY,NON-FRIABLE	0	0	0	0	QUARTZ,PAINT WOLLASTONITE
992858B	11/20/95	LG	12/11/95	5D-N,"C",13066,RM. 6 NO/WEST,WALL PLASTER	NON-HOMOGENEOUS, CEMENTITIOUS, GREY, NON-FRIABLE	0	0	0	0	1% CELLULOSE WOLLASTONITE VERMICULITE,QUARTZ
992859A	11/20/95	LG	12/11/95	5D-N,"C",13066,RM. 5 SO/EAST,WALL PLASTER	NON-HOMOGENEOUS, COATED MATERIAL, WHT/GREY,NON-FRIABLE	0	0	0	0	QUARTZ,PAINT WOLLASTONITE
992859B	11/20/95	LG	12/11/95	5D-N,"C",13066,RM. 5 SO/EAST,WALL PLASTER	NON-HOMOGENEOUS, CEMENTITIOUS, GREY, NON-FRIABLE	0	0	0	0	1% CELLULOSE WOLLASTONITE VERMICULITE,QUARTZ
992860A	11/20/95	LG	12/11/95	5D-N,"C",13066,RM. 8 NO/WEST,WALL PLASTER	NON-HOMOGENEOUS, COATED MATERIAL, WHT/GREY,NON-FRIABLE	0	0	0	0	QUARTZ,PAINT WOLLASTONITE

mature of Lab Supervisor: Signature of Analyst:

E: 0% : No Asbestos Detected; < 1% : Asbestos Detected Above 0% and Below or Equal to 1%.
"Quantitation done by optical estimate" 1 - 5% considered non-quantifiable.
This report relates to only the material tested.
This report is not used by the LAUSD/EHSB to claim product endorsement by NVLAP or any agency or the U.S. government.

L.A.U.S.D.
Environmental Health and Safety Branch
1449 S. San Pedro St. Rm. 215
s Angeles CA 90015
3) 743-5086

ASBESTOS BULK SAMPLE ANALYSIS
LABORATORY REPORT
BASSETT ST ELEM
2323

METHOD EPA/600/R-93/116 (MOD) JULY 1993

LAUSD Lab #	Date Submitted	Mic pst	Date Analyzed	Material Source	Material Description	Chr %	Am %	Oth %	Tot %	Material Background
992860B	11/20/95	LG	12/11/95	5D-N,"C",13066,RM. 8 NO/WEST,WALL PLASTER	NON-HOMOGENEOUS, CEMENTITIOUS, GREY, NON-FRIABLE	0	0	0	0	1% CELLULOSE WOLLASTONITE VERMICULITE,QUARTZ
992861A	11/20/95	LG	12/11/95	7D-N,KNDR,13078,RM.2 NO/EAST,WALL PLASTER	NON-HOMOGENEOUS, COATED MATERIAL, GREY/WHT,NON-FRIABLE	0	0	0	0	QUARTZ,PAINT WOLLASTONITE
992861B	11/20/95	LG	12/11/95	7D-N,KNDR,13078,RM.2 NO/EAST,WALL PLASTER	NON-HOMOGENEOUS, CEMENTITIOUS, GREY, NON-FRIABLE	0	0	0	0	1% CELLULOSE WOLLASTONITE QUARTZ,VERMICULITE
992862A	11/20/95	LG	12/11/95	7D-N,KNDR,13078,RM.1 SO/EAST,WALL PLASTER	NON-HOMOGENEOUS, COATED MATERIAL, GREY/WHT,NON-FRIABLE	0	0	0	0	QUARTZ,PAINT WOLLASTONITE
992862B	11/20/95	LG	12/11/95	7D-N,KNDR,13078,RM.1 SO/EAST,WALL PLASTER	NON-HOMOGENEOUS, CEMENTITIOUS, GREY, NON-FRIABLE	0	0	0	0	1% CELLULOSE WOLLASTONITE VERMICULITE,QUARTZ

Signature of Lab Supervisor: Signature of Analyst:

E: 0% : No Asbestos Detected; <1% : Asbestos Detected Above 0% and Below or Equal to 1%.
"Quantitation done by optical estmate" 1 - 5% considered non-quantifiable.
This report relates to only the material used.
This report is not used by the LAUSD/EHSB to claim product endorsement by NVLAP or any agency of the U.S. government.

ASBESTOS BULK SAMPLE SUBMITTAL

SITE NAME: Bassett Elementary School CODE: 2323 PROJECT: Earthquake Damage Repair

SAMPLED BY: Don Calloway DEPT.: ATU TEL. NO.: 625-5403 DATE SAMPLED: 11-21-95

Fill in all information Legibly and Precisely. Sampler should make a copy before submitting to the lab. **DO NOT USE PENCIL** (Rev. 7/95)

Original to EHSB lab with samples. Lab will FAX a copy to ATU with sample numbers. Results sheet to be FAXED to ATU when completed.

LAB NUMBER	SAMPLE NUMBER	BUILDING NUMBER	BUILDING NAME	JOB NUMBER	DSR NUMBER	ROOM NUMBER AND/OR NAME	LOCATION IN ROOM	MATERIAL TYPE (DESCRIBE)	FRIABLE (CIRCLE)
993213	X-62	6D-N	Bldg "D"	6303788	13069	Boy's Restroom	S/East	sand textured wall plaster	YES (NO)
993214	X-63	↓	↓	↓	↓	Plant Mgr Office	N/East	↓	YES (NO)
993215	X-64	↓	↓	↓	↓	Room 18	S/West	↓	YES (NO)
									YES NO
									YES NO
									YES NO
									YES NO
									YES NO
									YES NO
									YES NO
									YES NO

71089 95 0833

CHAIN OF CUSTODY:

DATE:	TIME:	NAME: PRINT AND SIGN	DEPARTMENT/AREA	NO. OF SAMPLES:
11-21-95	5:30 pm	Donald Calloway Donald Calloway	ATU/19	3
11/27/95	8:55 A	E. Z. MOLANO [illegible]	EHSB	3
12/12/95	4:38 P	E. Z. MOLANO [illegible]	EHSB	3
12-12-95	4:38 pm	Terri Tweedell Terri Tweedell	Hygeia	3

Hygeia Environmental Laboratories Inc.

82 W. Sierra Madre Blvd
Sierra Madre, California
91024-2434

818-355-4711
FAX: 818-355-4497

NIST / NVLAP Lab Code No. 102116-0
California Dept of Health Services
ELAP Certificate No. 1269

Bulk Sample Analysis Summary

Analytical Method: *EPA 600/M4-82-020*

December 20, 1995

Ms. Deeanne Bryant
Los Angeles Unified School District
PO Box 2298
Los Angeles, CA 90051

Hygeia Ref. No.: *71089950833*
Date Collected: *November 21, 1995*
Date Received: *December 12, 1995*
Date Analyzed: *December 19, 1995*
No. Samples: *3*

Microscopist: *Rafik Vartanian*
Client Project: *993213-215 Bassett Elem.*

Client ID No. / Hygeia ID No.	Sample Description / Color	Asbestos Detected	Analytical Results	Q.C.
993213 / 324375	*Sand textured wall plaster / grey & green*	*No*	*5% Cellulose* *75% Mineral Filler* *20% Organic Binders*	
993214 / 324376	*Sand textured wall plaster / brown & tan*	*No*	*3% Cellulose* *87% Mineral Filler* *10% Organic Binders*	
993215 / 324377	*Sand textured wall plaster / grey*	*No*	*5% Cellulose* *80% Mineral Filler* *15% Organic Binders*	

Microscopist: R. Vartanian Laboratory Supervisor: [illegible]

The limit of detection for this analytical method is less than one percent asbestos (visual area estimates).

ASBESTOS BULK SAMPLE SUBMITTAL

SITE NAME: Bassett Elementary School CODE: 2323 PROJECT: Earthquake Damage Repair

SAMPLED BY: Kasdi Saat & Byrant Elberts DEPT.: ATU TEL. NO.: X5403 DATE SAMPLED: 11-18-95

Fill in all information Legibly and Precisely. Sampler should make a copy before submitting to the lab. **DO NOT USE PENCIL** (Rev. 7/95)

Original to EHSB lab with samples. Lab will FAX a copy to ATU with sample numbers. Results sheet to be FAXED to ATU when completed.

LAB NUMBER	SAMPLE NUMBER	BUILDING NUMBER	BUILDING NAME	JOB NUMBER	DSR NUMBER	ROOM NUMBER AND/OR NAME	LOCATION IN ROOM	MATERIAL TYPE (DESCRIBE)	FRIABLE (CIRCLE)
992863	X-67	7D-N	Kinder-garten	6303789	13078	Room 1	N/East	Sand textured wall plaster	YES (NO)
992864	X-68	1D-N	Main Bldg	6303783	13060	Library	N/East	9"x9" grey floor tiles w/black &	YES (NO)
992865	X-69	↓	↓	↓	↓	Library	S/Center	tan streaks & mastic	YES (NO)
992866	X-70	↓	↓	↓	↓	Storage	S/West	↓	YES (NO)
	X-71								YES NO
	X-72								YES NO
	X-73								YES NO
	X-74								YES NO
	X-75								YES NO
	X-76								YES NO
992867	X-77	3D-N	Bldg "A"	6303785	13064	Room 10A	N/East	12x12 straight hole ceiling tiles	(YES) NO

CHAIN OF CUSTODY:

DATE:	TIME:	NAME: PRINT AND SIGN	DEPARTMENT/AREA	NO. OF SAMPLES:
11-18-95	3:00Pm	Kasdi Saat Kasdi Saat	ATU/19	5
11-20-95	10:50Am	Patty Filous / Patty Filous	EHSB	5

L.A.U.S.D.
Environmental Health and Safety Branch
1449 S. San Pedro St. Rm. 215
s Angeles CA 90015
3) 743-5086

ASBESTOS BULK SAMPLE ANALYSIS
LABORATORY REPORT
BASSETT ST ELEM
2323

METHOD EPA/600/R-93/116 (MOD) JULY 1993

LAUSD Lab #	Date Submitted	Mic pst	Date Analyzed	Material Source	Material Description	Chr %	Am %	Oth %	Tot %	Material Background
992863	11/20/95	EZM	12/12/95	7D-N,KNDR,13078,RM.1 NO/EAST,WALL PLASTER	NON-HOMOGENEOUS, CEMENTITIOUS, GRAY, NON-FRIABLE	0	0	0	0	1% CELLULOSE CALCITE,QUARTZ PIGMENT
992864A	11/20/95	EZM	12/12/95	1D-N,MAIN,13060,LBRY NO/E,9X9 FLOOR TILE	HOMOGENEOUS, FLAT SOLID, GRAY, NON-FRIABLE	5	0	0	5	CALCITE QUARTZ
992864B	11/20/95	EZM	12/12/95	1D-N,MAIN,13060,LBRY N/E,9X9FL,TILE,MSTIC	HOMOGENEOUS, TAR-LIKE, BLACK, NON-FRIABLE	7	0	0	7	2% CELLULOSE TAR,BINDER
992865A	11/20/95	EZM	12/12/95	1D-N,MAIN,13060,LBRY SO/C,9X9 FLOOR TILE	HOMOGENEOUS, FLAT SOLID, GRAY, NON-FRIABLE	3	0	0	3	CALCITE QUARTZ
992865B	11/20/95	EZM	12/12/95	1D-N,MAIN,13060,LBRY S/C,9X9FL.TILE,MSTIC	HOMOGENEOUS, TAR-LIKE, BLACK, NON-FRIABLE	7	0	0	7	2% CELLULOSE TAR,BINDER
992866A	11/20/95	EZM	12/12/95	1D-N,MAIN,13060,STGE SO/W,9X9 FLOOR TILE	HOMOGENEOUS, FLAT SOLID, GRAY, NON-FRIABLE	3	0	0	3	1% CELLULOSE CALCITE,QUARTZ
992866B	11/20/95	EZM	12/12/95	1D-N,MAIN,13060,STGE S/W,9X9FL.TILE,MSTIC	HOMOGENEOUS, TAR-LIKE, BLACK, NON-FRIABLE	7	0	0	7	2% CELLULOSE TAR,BINDER
992867	11/20/95	EZM	12/12/95	3D-N,"A",13064,RM10A NO/E,12X12 CEIL.TILE	NON-HOMOGENEOUS, FLAT SOLID/FIBROUS, BROWN, FRIABLE	0	0	0	0	85% CELLULOSE PIGMENT

'gnature of Lab Supervisor: DeLinne Bryant Signature of Analyst: [illegible]

TE: 0% : No Asbestos Detected; <1% : Asbestos Detected Above 0% and Below or Equal to 1%.
"Quantitation done by optical estmate" 1 - 5% considered non-quantifiable.
This report relates to only the material used.
This report is not used by the LAUSD/EHSB to claim product endorsement by NVLAP or any agency of the U.S. government.

ASBESTOS BULK SAMPLE SUBMITTAL

SITE NAME: Bassett Elementary School CODE: 2323 PROJECT: Earthquake Damage Repair

SAMPLED BY: Kasdi Saat & Byrant Elberts DEPT.: ATU TEL. NO.: X5403 DATE SAMPLED: 11-18-95

Fill in all information Legibly and Precisely. Sampler should make a copy before submitting to the lab. **DO NOT USE PENCIL** (Rev. 7/95)

Original to EHSB lab with samples. Lab will FAX a copy to ATU with sample numbers. Results sheet to be FAXED to ATU when completed.

LAB NUMBER	SAMPLE NUMBER	BUILDING NUMBER	BUILDING NAME	JOB NUMBER	DSR NUMBER	ROOM NUMBER AND/OR NAME	LOCATION IN ROOM	MATERIAL TYPE (DESCRIBE)	FRIABLE (CIRCLE)
992868	X-78	4D-N	Bldg "B"	6303786	13065	Room 16	E/Center	Straight holes Ceiling tiles, 12"x12"	(YES) NO
992869	X-79	5D-N	Bldg "C"	6303787	13066	Room 6	N/West	↓	(YES) NO
	~~X-80~~								~~(YES) NO~~
992870	X-81	7D-N	Kinder-garten	6303789	13078	Room 2	N/West	Straight hole ceiling tiles, 12"x12"	(YES) NO
992871	X-82	1D-N	Main Bldg	6303783	13060	Library	S/East	Barrier paper above ceiling tiles	(YES) NO
	~~X-83~~								~~(YES) NO~~
992872	X-84	4D-N	Bldg "B"	6303786	13065	Room 16	E/Center		(YES) NO
992873	X-85	5D-N	Bldg "C"	6303787	13066	Room 6	N/West		(YES) NO
	~~X-86~~								~~(YES) NO~~
992874	X-87	7D-N	Kinder-garten	6303790	13078	Room 2	N/West	↓	(YES) NO
									YES NO

CHAIN OF CUSTODY:

DATE:	TIME:	NAME: PRINT AND SIGN	DEPARTMENT/AREA	NO. OF SAMPLES:
11-18-95	3:00 Pm	Kasdi Saat Kasdi Saat	ATU/19	7
11-20-95	11:50AM	Patty Filous Patty Filous	EHSB	7

L.A.U.S.D.
Environmental Health and Safety Branch
1449 S. San Pedro St. Rm. 215
Los Angeles CA 90015
(213) 743-5086

ASBESTOS BULK SAMPLE ANALYSIS
LABORATORY REPORT
BASSETT ST ELEM
2323

METHOD EPA/600/R-93/116 (MOD) JULY 1993

LAUSD Lab #	Date Submitted	Mic pst	Date Analyzed	Material Source	Material Description	Chr %	Am %	Oth %	Tot %	Material Background
992868	11/20/95	DL	12/11/95	4D-N,"B",13065,RM.16 E/CT,CEIL.TILE 12X12	NON-HOMOGENEOUS, COATED SOLID FIBROUS WHITE/GOLD, FRIABLE	0	0	0	0	75% CELLULOSE QUARTZ
992869	11/20/95	DL	12/11/95	5D-N,"C",13066,RM. 6 NO/W,CEIL.TILE 12X12	NON-HOMOGENEOUS, COATED SOLID FIBROUS WHITE/GOLD, FRIABLE	0	0	0	0	75% CELLULOSE QUARTZ
992870	11/20/95	DL	12/11/95	7D-N,KNDR,13078,RM.2 NO/W,CEIL.TILE 12X12	NON-HOMOGENEOUS, COATED SOLID FIBROUS WHITE/GOLD, FRIABLE	0	0	0	0	75% CELLULOSE QUARTZ
992871	11/20/95	DL	12/11/95	1D-N,MAIN,13060,LBRY SO/E,BARR.PAPER,CEIL	NON-HOMOGENEOUS, TAR-LIKE W/PAPER, BLACK/BROWN, FRIABLE	0	0	0	0	90% CELLULOSE TAR,QUARTZ
992872	11/20/95	DL	12/11/95	4D-N,"B",13065,RM.16 E/CT,BARR.PAPER,CEIL	NON-HOMOGENEOUS, TAR-LIKE W/PAPER, BLACK/BROWN, FRIABLE	0	0	0	0	75% CELLULOSE TAR,QUARTZ
992873	11/20/95	DL	12/11/95	5D-N,"C",13066,RM. 6 E/CT,BARR.PAPER,CEIL	NON-HOMOGENEOUS, TAR-LIKE W/PAPER, BLACK/BROWN, FRIABLE	0	0	0	0	75% CELLULOSE TAR,QUARTZ
992874	11/20/95	DL	12/11/95	7D-N,KNDR,13078,RM.2 NO/W,BARR.PAPER,CEIL	NON-HOMOGENEOUS, TAR-LIKE W/PAPER, BLACK/BROWN, FRIABLE	0	0	0	0	75% CELLULOSE TAR,QUARTZ

Signature of Lab Supervisor: Delanne Bryant Signature of Analyst: Donald Bruni

NOTE: 0% : No Asbestos Detected; <1% : Asbestos Detected Above 0% and Below or Equal to 1%.
"Quantitation done by optical estmate" 1 - 5% considered non-quantifiable.
This report relates to only the material used.
This report is not used by the LAUSD/EHSB to claim product endorsement by NVLAP or any agency of the U.S. government.

ASBESTOS BULK SAMPLE SUBMITTAL

SITE NAME: Bassett Elementary School CODE: 2323 PROJECT: Earthquake Damage Repair

SAMPLED BY: Kasdi Saat & Byrant Elberts DEPT.: ATU TEL. NO.: X5403 DATE SAMPLED: 11-18-95

Fill in all information Legibly and Precisely. Sampler should make a copy before submitting to the lab. **DO NOT USE PENCIL** (Rev. 7/95)

Original to EHSB lab with samples. Lab will FAX a copy to ATU with sample numbers. Results sheet to be FAXED to ATU when completed.

LAB NUMBER	SAMPLE NUMBER	BUILDING NUMBER	BUILDING NAME	JOB NUMBER	DSR NUMBER	ROOM NUMBER AND/OR NAME	LOCATION IN ROOM	MATERIAL TYPE (DESCRIBE)	FRIABLE (CIRCLE)
992875	X-88	3D-N	Bldg "A"	6303785	13064	Room 10A	N/West	9x9 green floor tiles & mastic	YES NO
992876	X-89	↓	↓	↓	↓	Room 10A	E/Center	↓	YES NO
992877	X-90	↓	↓	↓	↓	Room 10B	N/West	↓	YES NO
992878	X-91	5D-N	Bldg "C"	6303787	13066	Room 8	S/West	12X12 light brown floor tiles & mastic	YES NO
992879	X-92	↓	↓	↓	↓	Room 9	E/Center	↓	YES NO
992880	X-93	↓	↓	↓	↓	Room 7	W/Center	↓	YES NO
992881	X-94	↓	↓	↓	↓	Room 5	S/East	12X12 Gold floor tile & mastic	YES NO
992882	X-95	↓	↓	↓	↓	Room 5	N/West	↓	YES NO
992883	X-96	↓	↓	↓	↓	Room 6	N/West	↓	YES NO
992884	X-97	↓	↓	↓	↓	Heater Room	N/Center	Sand Ceiling Plaster	YES NO
992885	X-98	↓	↓	↓	↓	Hopper Room	E/Center	↓	YES NO

CHAIN OF CUSTODY:

DATE:	TIME:	NAME: PRINT AND SIGN	DEPARTMENT/AREA	NO. OF SAMPLES:
11-18-95	3:00pm	Kasdi Saat / Kasdi Saat	ATU/19	11
11-20-95	11:50 am	[illegible] / [illegible]	EHSB	11

L.A.U.S.D.
Environmental Health and Safety Branch
1449 S. San Pedro St. Rm. 215
Angeles CA 90015
) 743-5086

ASBESTOS BULK SAMPLE ANALYSIS
LABORATORY REPORT
BASSETT ST ELEM
2323

METHOD EPA/600/R-93/116 (MOD) JULY 1993

LAUSD Lab #	Date Submitted	Mic pst	Date Analyzed	Material Source	Material Description	Chr %	Am %	Oth %	Tot %	Material Background
992875A	11/20/95	LG	12/15/95	3D-N,"A",13064,RM10A N/W,9X9 FLR.TILE,MST	NON-HOMOGENEOUS, FLAT SOLID, GREEN, NON-FRIABLE	7	0	0	7	CALCITE QUARTZ BINDER
992875B	11/20/95	LG	12/15/95	3D-N,"A",13064,RM10A N/W,9X9 FLR.TILE,MST	NON-HOMOGENEOUS, TAR-LIKE, BLACK, NON-FRIABLE	6	0	0	6	TAR QUARTZ BINDER
992876A	11/20/95	LG	12/15/95	3D-N,"A",13064,RM10A E/C,9X9 FLR.TILE,MST	NON-HOMOGENEOUS, FLAT SOLID, GREEN, NON-FRIABLE	8	0	0	8	CALCITE QUARTZ BINDER
992876B	11/20/95	LG	12/15/95	3D-N,"A",13064,RM10A E/C,9X9 FLR.TILE,MST	NON-HOMOGENEOUS, TAR-LIKE, BLACK, NON-FRIABLE	6	0	0	6	TAR QUARTZ BINDER
992877A	11/20/95	LG	12/15/95	3D-N,"A",13064,RM10B N/W,9X9 FLR.TILE,MST	NON-HOMOGENEOUS, FLAT SOLID, GREEN. NON-FRIABLE	5	0	0	5	2% CELLULOSE BINDER,QUARTZ CALCITE
992877B	11/20/95	LG	12/15/95	3D-N,"A",13064,RM10B N/W,9X9 FLR.TILE,MST	NON-HOMOGENEOUS, TAR-LIKE, BLACK, NON-FRIABLE	9	0	0	9	TAR QUARTZ BINDER
992878	11/20/95	LG	12/15/95	5D-N,"C",13066,RM. 8 S/W,12X12 FL.TIL,MST	NON-HOMOGENEOUS, FLAT SOLID, LIGHT BROWN, NON-FRIABLE	0	0	0	0	3% CELLULOSE BINDER,QUARTZ CALCITE
992879	11/20/95	LG	12/15/95	5D-N,"C",13066,RM. 9 E/C,12X12 FL.TIL,MST	NON-HOMOGENEOUS, FLAT SOLID, LIGHT BROWN, NON-FRIABLE	0	0	0	0	3% CELLULOSE BINDER,QUARTZ CALCITE
992880A	11/20/95	LG	12/15/95	5D-N,"C",13066,RM. 7 W/C,12X12 FL.TIL,MST	NON-HOMOGENEOUS, FLAT SOLID, LIGHT BROWN, NON-FRIABLE	0	0	0	0	3% CELLULOSE BINDER,QUARTZ CALCITE
992880B	11/20/95	LG	12/15/95	5D-N,"C",13066,RM. 7 W/C,12X12 FL.TIL,MST	NON-HOMOGENEOUS, TAR-LIKE, BLACK, NON-FRIABLE	8	0	0	8	TAR QUARTZ CALCITE
992881A	11/20/95	LG	12/15/95	5D-N,"C",13066,RM. 5 S/E,12X12 FL.TIL,MST	NON-HOMOGENEOUS, FLAT SOLID, GOLD, NON-FRIABLE	1	0	0	1	BINDER QUARTZ CALCITE

Signature of Lab Supervisor: Delfinne Bryant Signature of Analyst:

0% : No Asbestos Detected; < 1% : Asbestos Detected Above 0% and Below or Equal to 1%.
"Quantitation done by optical estimate" 1 - 5% considered non-quantifiable.
This report relates to only the material tested.
This report is not used by the LAUSD/EHSB to claim product endorsement by NVLAP or any agency or the U.S. government.

L.A.U.S.D.
Environmental Health and Safety Branch
1449 S. San Pedro St. Rm. 215
Angeles CA 90015
3) 743-5086

ASBESTOS BULK SAMPLE ANALYSIS
LABORATORY REPORT
BASSETT ST ELEM
2323

METHOD EPA/600/R-93/116 (MOD) JULY 1993

LAUSD Lab #	Date Submitted	Mic pst	Date Analyzed	Material Source	Material Description	Chr %	Am %	Oth %	Tot %	Material Background
992881B	11/20/95	LG	12/15/95	5D-N,"C",13066,RM. 5 S/E,12X12 FL.TIL,MST	NON-HOMOGENEOUS, TAR-LIKE, BLACK, NON-FRIABLE	4	0	0	4	CALCITE QUARTZ TAR
992882A	11/20/95	LG	12/15/95	5D-N,"C",13066,RM. 5 N/W,12X12 FL.TIL,MST	NON-HOMOGENEOUS, FLAT SOLID, GOLD, NON-FRIABLE	0	0	0	0	BINDER QUARTZ CALCITE
992882B	11/20/95	LG	12/15/95	5D-N,"C",13066,RM. 5 N/W,12X12 FL.TIL,MST	NON-HOMOGENEOUS, TAR-LIKE, BLACK, NON-FRIABLE	9	0	0	9	BINDER QUARTZ TAR
992883A	11/20/95	LG	12/15/95	5D-N,"C",13066,RM. 6 N/W,12X12 FL.TIL,MST	NON-HOMOGENEOUS, FLAT SOLID, GOLD, NON-FRIABLE	0	0	0	0	BINDER QUARTZ CALCITE
992883B	11/20/95	LG	12/15/95	5D-N,"C",13066,RM. 6 N/W,12X12 FL.TIL,MST	NON-HOMOGENEOUS, TAR-LIKE, BLACK, NON-FRIABLE	9	0	0	9	BINDER QUARTZ TAR
992884A	11/20/95	LG	12/15/95	5D-N,"C",13066,HEATR NO/C,CEILING PLASTER	NON-HOMOGENEOUS, COATED MATERIAL, BGE/WHITE,NON-FRIABLE	0	0	0	0	WOLLASTONITE BINDER,QUARTZ
992884B	11/20/95	LG	12/15/95	5D-N,"C",13066,HEATR NO/C,CEILING PLASTER	NON-HOMOGENEOUS, CEMENTITIOUS, GREY, NON-FRIABLE	0	0	0	0	VERMICULITE BINDER,QUARTZ
992885A	11/20/95	LG	12/15/95	5D-N,"C",13066,HOPPR E/CT,CEILING PLASTER	NON-HOMOGENEOUS, COATED MATERIAL, BGE/WHITE,NON-FRIABLE	0	0	0	0	WOLLASTONITE BINDER,QUARTZ
992885B	11/20/95	LG	12/15/95	5D-N,"C",13066,HOPPR E/CT,CEILING PLASTER	NON-HOMOGENEOUS, CEMENTITIOUS, GREY, NON-FRIABLE	0	0	0	0	VERMICULITE BINDER,QUARTZ

Signature of Lab Supervisor: Deebonne Bryant Signature of Analyst: [illegible]

0% : No Asbestos Detected; <1% : Asbestos Detected Above 0% and Below or Equal to 1%.
"Quantitation done by optical estimate" 1 - 5% considered non-quantifiable.
This report relates to only the material used.
This report is not used by the LAUSD/EHSB to claim product endorsement by NVLAP or any agency of the U.S. government.

ASBESTOS BULK SAMPLE SUBMITTAL

SITE NAME: Bassett Elementary School CODE: 2323 PROJECT: Earthquake Damage Repair

SAMPLED BY: Kasdi Saat & Bryant Elberts DEPT.: ATU TEL. NO.: X5403 DATE SAMPLED: 11-18-95

Fill in all information Legibly and Precisely. Sampler should make a copy before submitting to the lab. **DO NOT USE PENCIL** (Rev. 7/95)

Original to EHSB lab with samples. Lab will FAX a copy to ATU with sample numbers. Results sheet to be FAXED to ATU when completed.

LAB NUMBER	SAMPLE NUMBER	BUILDING NUMBER	BUILDING NAME	JOB NUMBER	DSR NUMBER	ROOM NUMBER AND/OR NAME	LOCATION IN ROOM	MATERIAL TYPE (DESCRIBE)	FRIABLE (CIRCLE)
992886	X-99	5D-N	Bldg "C"	6303787	13066	Broom Closet	N/West	Sand ceiling plaster	YES (NO)
									YES NO
									YES NO
									YES NO
									YES NO
									YES NO
									YES NO
									YES NO
									YES NO
									YES NO
									YES NO

CHAIN OF CUSTODY:

DATE:	TIME:	NAME: PRINT AND SIGN	DEPARTMENT/AREA	NO. OF SAMPLES:
11-18-95	3:00 Pm	Kasdi Saat Kasdi Saat	ATU/19	1
11-20-95	11:57 Am	Jutty Filons Jutty Filons	EHSB	1

L.A.U.S.D.
Environmental Health and Safety Branch
1449 S. San Pedro St. Rm. 215
Los Angeles CA 90015
(213) 743-5086

ASBESTOS BULK SAMPLE ANALYSIS
LABORATORY REPORT
BASSETT ST ELEM
2323

METHOD EPA/600/R-93/116 (MOD) JULY 1993

LAUSD Lab #	Date Submitted	Mic pst	Date Analyzed	Material Source	Material Description	Chr %	Am %	Oth %	Tot %	Material Background
992886A	11/20/95	PUG	12/11/95	5D-N,"C",13066,BROOM CLST,N/W,CEIL.PLASTR	NON-HOMOGENEOUS, COATED MATERIAL, BGE/BRWN,NON-FRIABLE	0	0	0	0	2% CELLULOSE TALC,BINDER QUARTZ
992886B	11/20/95	PUG	12/11/95	5D-N,"C",13066,BROOM CLST,N/W,CEIL.PLASTR	HOMOGENEOUS, CEMENTITIOUS, BEIGE, NON-FRIABLE	0	0	0	0	BINDER QUARTZ CALCITE

Signature of Lab Supervisor: Delinne Bryant Signature of Analyst: Pauline M. Garson

NOTE: 0% : No Asbestos Detected; <1% : Asbestos Detected Above 0% and Below or Equal to 1%.
"Quantitation done by optical estimate" 1 - 5% considered non-quantifiable.
This report relates to only the material used.
This report is not used by the LAUSD/EHSB to claim product endorsement by NVLAP or any agency of the U.S. government.

ASBESTOS BULK SAMPLE SUBMITTAL

SITE NAME: Bassett Elementary School CODE: 2323 PROJECT: Earthquake Damage Repair

SAMPLED BY: Don Calloway DEPT.: ATU TEL. NO.: X5403 DATE SAMPLED: 11-21-95

Fill in all information Legibly and Precisely. Sampler should make a copy before submitting to the lab. **DO NOT USE PENCIL** (Rev. 7/95)

Original to EHSB lab with samples. Lab will FAX a copy to ATU with sample numbers. Results sheet to be FAXED to ATU when completed.

LAB NUMBER	SAMPLE NUMBER	BUILDING NUMBER	BUILDING NAME	JOB NUMBER	DSR NUMBER	ROOM NUMBER AND/OR NAME	LOCATION IN ROOM	MATERIAL TYPE (DESCRIBE)	FRIABLE (CIRCLE)
993218	X-100	6D-N	Bldg "D"	6303788	13069	Plant Mgr. Office	C/ East	sand textured ceiling plaster	YES (NO)
993219	X-101	↓	↓	↓	↓	Heater Closet	C/ south	↓	YES (NO)
993220	X-102	↓	↓	↓	↓	Broom Closet	C/West	↓	YES (NO)
993221	X-103	↓	↓	↓	↓	Room 18	S/East	9x9 blue/gray/dark green floor tile and mastic	YES (NO)
993222	X-104	↓	↓	↓	↓	↓	N/East	↓	YES (NO)
993223	X-105	↓	↓	↓	↓	↓	S/West	↓	YES (NO)
									YES NO
									YES NO
									YES NO
									YES NO
									YES NO

T1089 95 0834

CHAIN OF CUSTODY:

DATE:	TIME:	NAME: PRINT AND SIGN	DEPARTMENT/AREA	NO. OF SAMPLES:
11-21-95	5:30pm	Donald Calloway Donald Calloway	ATU/19	6
11/27/95	8:55 A	E.Z. Mocano [signature]	EHSB	6
12/12/95	4:40P	E.Z. Mocano [signature]	EHSB	6
12-12-95	4:40 pm	Terri Tuedell Terri Tuedell	Hygeia	6

Hygeia Environmental Laboratories Inc.

82 W. Sierra Madre Blvd
Sierra Madre, California
91024-2434

818-355-4711
FAX: 818-355-4497

NIST / NVLAP Lab Code No. 102116-0
California Dept of Health Services
ELAP Certificate No. 1269

Bulk Sample Analysis Summary

Analytical Method: *EPA 600/M4-82-020*

December 20, 1995

Ms. Deeanne Bryant
Los Angeles Unified School District
PO Box 2298
Los Angeles, CA 90051

Hygeia Ref. No.: *71089950835*
Date Collected: *November 21, 1995*
Date Received: *December 12, 1995*
Date Analyzed: *December 19, 1995*
No. Samples: *6*

Microscopist: *Humberto Espinoza*
Client Project: *993218-223 Bassett Elem.*

Client ID No. / Hygeia ID No.	Sample Description / Color	Asbestos Detected	Analytical Results	Q.C.
993218 324380	Sand textured ceiling plaster / grey	No	100% Mineral Filler	
993219 324381	Sand textured ceiling plaster / grey	No	100% Mineral Filler	
993220 324382	Sand textured ceiling plaster / grey	No	100% Mineral Filler	
993221 324383	9x9 floor tile / grey	Yes	5% Chrysotile 80% Mineral Filler 15% Organic Binders	X
993222 324384	9x9 floor tile / grey	Yes	5% Chrysotile 80% Mineral Filler 15% Organic Binders	
993223 324385	9x9 floor tile / grey	Yes	5% Chrysotile 80% Mineral Filler 15% Organic Binders	

ASBESTOS BULK SAMPLE SUBMITTAL

SITE NAME: Bassett Elementary School CODE: 2323 PROJECT: Earthquake Damage Repair

SAMPLED BY: Don Calloway DEPT.: ATU TEL. NO.: X5403 DATE SAMPLED: 11-21-95

Fill in all information Legibly and Precisely. Sampler should make a copy before submitting to the lab. **DO NOT USE PENCIL** (Rev. 7/95)

Original to EHSB lab with samples. Lab will FAX a copy to ATU with sample numbers. Results sheet to be FAXED to ATU when completed.

LAB NUMBER	SAMPLE NUMBER	BUILDING NUMBER	BUILDING NAME	JOB NUMBER	DSR NUMBER	ROOM NUMBER AND/OR NAME	LOCATION IN ROOM	MATERIAL TYPE (DESCRIBE)	FRIABLE (CIRCLE)
993224	X-115	2D-N	Multi-Purpose	6303784	42322	Mechanical Room-South (by stage)	N/West	Sand textured wall plaster	YES (NO)
993225	X-116	↓	↓	↓	↓	↓	c/North	↓	YES (NO)
									YES NO
									YES NO
									YES NO
									YES NO
									YES NO
									YES NO
									YES NO
									YES NO
									YES NO

71089 950836

CHAIN OF CUSTODY:

DATE:	TIME:	NAME: PRINT AND SIGN	DEPARTMENT/AREA	NO. OF SAMPLES:
11-21-95	5:30 PM	Donald Calloway Donald Calloway	ATU/19	2
11/27/95	8:55 A	C.Z. Mears [illegible]	EHSB	2
12/12/95	4:00 P	C.Z. Mears [illegible]	EHSB	2
12.12.95	4:40 pm	[illegible] Webb Elizabeth Webb	Hygeia	2

Hygeia Environmental Laboratories Inc.

82 W. Sierra Madre Blvd
Sierra Madre, California
91024-2434

818-355-4711
FAX: 818-355-4497

NIST / NVLAP Lab Code No. 102116-0
California Dept of Health Services
ELAP Certificate No. 1269

Bulk Sample Analysis Summary

Analytical Method: *EPA 600/M4-82-020*

December 20, 1995

Ms. Deeanne Bryant
Los Angeles Unified School District
PO Box 2298
Los Angeles, CA 90051

Hygeia Ref. No.: *71089950836*
Date Collected: *November 21, 1995*
Date Received: *December 12, 1995*
Date Analyzed: *December 19, 1995*
No. Samples: *2*

Microscopist: *Humberto Espinoza*
Client Project: *993224-225 Bassett Elem.*

Client ID No. Hygeia ID No.	Sample Description / Color	Asbestos Detected	Analytical Results	Q.C.
993224	*Sand textured wall plaster / grey*	*No*	*100% Mineral Filler*	
324386				
993225	*Sand textured wall plaster / grey*	*No*	*100% Mineral Filler*	
324387				

Microscopist: Humberto Espinoza G. Laboratory Supervisor:

The limit of detection for this analytical method is less than one percent asbestos (visual area estimates).

ASBESTOS BULK SAMPLE SUBMITTAL

SITE NAME: Bassett Elementary School CODE: 2323 PROJECT: Earthquake Damage Repair

SAMPLED BY: Don Calloway DEPT.: ATU TEL. NO.: X5403 DATE SAMPLED: 11-21-95

Fill in all information Legibly and Precisely. Sampler should make a copy before submitting to the lab. **DO NOT USE PENCIL** (Rev. 7/95)

Original to EHSB lab with samples. Lab will FAX a copy to ATU with sample numbers. Results sheet to be FAXED to ATU when completed.

LAB NUMBER	SAMPLE NUMBER	BUILDING NUMBER	BUILDING NAME	JOB NUMBER	DSR NUMBER	ROOM NUMBER AND/OR NAME	LOCATION IN ROOM	MATERIAL TYPE (DESCRIBE)	FRIABLE (CIRCLE)
993226	X-117	2D-N	Multi-purpose	6303784	42322	Mechanical Room-North (by Stage)	N/west	Sand textured wall plaster	YES NO
993227	X-118	↓	↓	↓	↓	mechanical Room-South (by Stage)	N/west	Sand textured ceiling plaster	YES NO
993228	X-119	↓	↓	↓	↓	↓	Center	↓	YES NO
993229	X-120	↓	↓	↓	↓	Mechanical Room-North (by Stage)	Center	↓	YES NO
993230	X-121	↓	↓	↓	↓	Auditorium	S/west	Plaster on Soffit	YES NO
993231	X-122	↓	↓	↓	↓	↓	C/North	↓	YES NO
993232	X-123	↓	↓	↓	↓	↓	S/East	↓	YES NO
993233	X-124	↓	↓	↓	↓	Kitchen Locker	N/west	Smooth textured wall plaster	YES NO
993234	X-125	↓	↓	↓	↓	Kitchen	C/North	↓	YES NO
993235	X-126	↓	↓	↓	↓	↓	C/East	↓	YES NO
993236	X-127	↓	↓	↓	↓	↓	S/East	↓	YES NO

71089 95 0837

CHAIN OF CUSTODY:

DATE:	TIME:	NAME: PRINT AND SIGN	DEPARTMENT/AREA	NO. OF SAMPLES:
11-21-95	5:30pm	Donald Calloway Donald Calloway	ATU/19	11
11/27/95	8:55 A	E. Z. Molano [signature]	EHSB	11
12/12/95	4:40 P	E. Z. Molano [signature]	EHSB	11
12-12-95	4:40 pm	Terri Tuedell Terri Tuedell	Hygeia	11

Hygeia Environmental Laboratories Inc.

82 W. Sierra Madre Blvd
Sierra Madre, California
91024-2434

818-355-4711
FAX: 818-355-4497

NIST / NVLAP Lab Code No. 102116-0
California Dept of Health Services
ELAP Certificate No. 1269

Bulk Sample Analysis Summary

Analytical Method: *EPA 600/M4-82-020*

December 20, 1995

Ms. Deeanne Bryant
Los Angeles Unified School District
PO Box 2298
Los Angeles, CA 90051

Hygeia Ref. No.: *71089950837*
Date Collected: *November 21, 1995*
Date Received: *December 12, 1995*
Date Analyzed: *December 18, 1995*
No. Samples: *11*

Microscopist: *Jim King*
Client Project: *993226-236 Bassett Elem.*

Client ID No. / Hygeia ID No.	Sample Description / Color	Asbestos Detected	Analytical Results	Q.C.
993226 / 324388	Sand textured wall plaster / white	No	100% Mineral Filler	X
993227 / 324389	Sand textured ceiling plaster / white	No	100% Mineral Filler	
993228 / 324390	Sand textured ceiling plaster / white	No	100% Mineral Filler	
993229 / 324391	Sand textured ceiling plaster / white	No	100% Mineral Filler	
993230 / 324392	Plaster on soffit / white	No	100% Mineral Filler	
993231 / 324393	Plaster on soffit / white	No	100% Mineral Filler	

Bulk Sample Analysis Summary

Date: *December 20, 1995*
Hygeia Ref. No.: *71089950837*

Microscopist: *Jim King*

Client ID No. Hygeia ID No.	Sample Description / Color	Asbestos Detected	Analytical Results	Q.C.
993232 *324394*	*Plaster on soffit / white*	*No*	*100% Mineral Filler*	
993233 *324395*	*Smooth textured wall plaster / green & white*	*No*	*100% Mineral Filler*	
993234 *324396*	*Smooth textured wall plaster / white*	*No*	*100% Mineral Filler*	
993235 *324397*	*Smooth textured wall plaster / white*	*No*	*100% Mineral Filler*	
993236 *324398*	*Smooth textured wall plaster / white*	*No*	*100% Mineral Filler*	

Microscopist: _____ Laboratory Supervisor: _____

The limit of detection for this analytical method is less than one percent asbestos (visual area estimates).

ASBESTOS BULK SAMPLE SUBMITTAL

SITE NAME: Bassett Elementary School CODE: 2323 PROJECT: Earthquake Damage Repair

SAMPLED BY: Don Calloway DEPT.: ATU TEL. NO.: X5403 DATE SAMPLED: 11-22-95

Fill in all information Legibly and Precisely. Sampler should make a copy before submitting to the lab. **DO NOT USE PENCIL** (Rev. 7/95)

Original to EHSB lab with samples. Lab will FAX a copy to ATU with sample numbers. Results sheet to be FAXED to ATU when completed.

LAB NUMBER	SAMPLE NUMBER	BUILDING NUMBER	BUILDING NAME	JOB NUMBER	DSR NUMBER	ROOM NUMBER AND/OR NAME	LOCATION IN ROOM	MATERIAL TYPE (DESCRIBE)	FRIABLE (CIRCLE)
993237	X-128	2D-N	Multi-Purpose	6303784	42322	Restroom by Kitchen area	C/North	Smooth textured wall plaster	YES (NO)
993238	X-129					Kitchen	N/West	Smooth textured Ceiling plaster	YES (NO)
993239	X-130					↓	S/West	↓	YES (NO)
993240	X-131					Restroom by Kitchen area	C/North	↓	YES (NO)
993241	X-132					Stage	N/East	Sand textured Ceiling plaster	YES (NO)
993242	X-133					↓	S/East	↓	YES (NO)
993243	X-134					↓	C/West	↓	YES (NO)
993244	X-135					↓	N/West	Sand textured wall plaster	YES (NO)
993245	X-136					↓	N/East	↓	YES (NO)
993246	X-137					↓	S/East	↓	YES (NO)
993247	X-138	↓	↓	↓	↓	Kitchen	C/West	Ceiling tiles, 12"x12" straight hole	(YES) NO

71089 95 0838

CHAIN OF CUSTODY:

DATE:	TIME:	NAME: PRINT AND SIGN	DEPARTMENT/AREA	NO. OF SAMPLES:
11-22-95	5:30 pm	Donald Calloway Donald Calloway	ATU/19	11
11/27/95	8:55 A	E. Z. Molano [illegible]	EHS	11
12/1/95	4:40 P	E. Z. Molano [illegible]	EHS	11
12-12-95	4:40 pm	Terri Tweedell Terri Tweedell	Hygeia	11

Hygeia Environmental Laboratories Inc.

82 W. Sierra Madre Blvd
Sierra Madre, California
91024-2434

818-355-4711
FAX: 818-355-4497

NIST / NVLAP Lab Code No. 102116-0
California Dept of Health Services
ELAP Certificate No. 1269

Bulk Sample Analysis Summary

Analytical Method: *EPA 600/M4-82-020*

December 20, 1995

Ms. Deeanne Bryant
Los Angeles Unified School District
PO Box 2298
Los Angeles, CA 90051

Hygeia Ref. No.: *71089950838*
Date Collected: *November 22, 1995*
Date Received: *December 12, 1995*
Date Analyzed: *December 18, 1995*
No. Samples: *11*

Microscopist: *Humberto Espinoza*
Client Project: *993237-247 Bassett Elem.*

Client ID No. / Hygeia ID No.	Sample Description / Color	Asbestos Detected	Analytical Results	Q.C.
993237 / 324399	Smooth textured wall plaster / grey	No	100% Mineral Filler	
993238 / 324400	Smooth textured ceiling plaster / grey	No	100% Mineral Filler	
993239 / 324401	Smooth textured ceiling plaster / grey	No	100% Mineral Filler	
993240 / 324402	Smooth textured ceiling plaster / grey	No	100% Mineral Filler	
993241 / 324403	Sand textured ceiling plaster / grey	No	100% Mineral Filler	
993242 / 324404	Sand textured ceiling plaster / grey	No	100% Mineral Filler	

Bulk Sample Analysis Summary

Date: *December 20, 1995*
Hygeia Ref. No.: *71089950838*

Microscopist: *Humberto Espinoza*

Client ID No. Hygeia ID No.	Sample Description / Color	Asbestos Detected	Analytical Results	Q.C.
993243 *324405*	*Sand textured ceiling plaster / grey*	*No*	*100% Mineral Filler*	
993244 *324406*	*Sand textured wall plaster / grey*	*No*	*100% Mineral Filler*	X
993245 *324407*	*Sand textured wall plaster / grey*	*No*	*100% Mineral Filler*	
993246 *324408*	*Sand textured wall plaster / grey*	*No*	*100% Mineral Filler*	
993247 *324409*	*12"x12" ceiling tile / tan*	*No*	*95% Cellulose* *3% Mineral Filler* *2% Non-Fibrous Materials*	

Microscopist: Humberto Espinoza G. Laboratory Supervisor:

The limit of detection for this analytical method is less than one percent asbestos (visual area estimates).

ASBESTOS BULK SAMPLE SUBMITTAL

SITE NAME: Bassett Elementary School CODE: 2323 PROJECT: Earthquake Damage Repair

SAMPLED BY: Don Calloway DEPT.: ATU TEL. NO.: X5403 DATE SAMPLED: 11-22-95

Fill in all information Legibly and Precisely. Sampler should make a copy before submitting to the lab. **DO NOT USE PENCIL** (Rev. 7/95)

Original to EHSB lab with samples. Lab will FAX a copy to ATU with sample numbers. Results sheet to be FAXED to ATU when completed.

LAB NUMBER	SAMPLE NUMBER	BUILDING NUMBER	BUILDING NAME	JOB NUMBER	DSR NUMBER	ROOM NUMBER AND/OR NAME	LOCATION IN ROOM	MATERIAL TYPE (DESCRIBE)	FRIABLE (CIRCLE)
993248	X-139	2D-N	Multi-purpose	6303784	42322	Faculty Dining Rm	Center	Ceiling tiles, 12"x12" straight hole	(YES) NO
993249	X-140	↓	↓	↓	↓	Girl's Restroom	C/East	↓	(YES) NO
993250	X-141	↓	↓	↓	↓	Kitchen	C/West	Ceiling tile adhesive	YES (NO)
993251	X-142	↓	↓	↓	↓	Faculty Dining Rm	Center	↓	YES (NO)
993252	X-143	↓	↓	↓	↓	Girl's Restroom	C/East	↓	YES (NO)
993253	X-144	↓	↓	↓	↓	Entry Way	N/West	Sand textured ceiling plaster	YES (NO)
993254	X-145	↓	↓	↓	↓	Janitor Room	C/South	↓	YES (NO)
993255	X-146	↓	↓	↓	↓	Storage by Boy's Restroom	C/North	↓	YES (NO)
993256	X-147	↓	↓	↓	↓	Auditorium	S/East	Sand textured wall plaster	YES (NO)
993257	X-148	↓	↓	↓	↓	↓	N/East	↓	YES (NO)
993258	X-149	↓	↓	↓	↓	↓	N/West	↓	YES (NO)

T1089 95 0839

CHAIN OF CUSTODY:

DATE:	TIME:	NAME: PRINT AND SIGN	DEPARTMENT/AREA	NO. OF SAMPLES:
11-22-95	5:30pm	Donald Calloway Donald Calloway	ATU/19	11
11/27/95	9:00a	E.Z. Mocano	EHSB	11
12/11/95	4:40p	E.Z. Mocano	EHSB	11
12-12-95	4:40pm	Terri Tweedell Terri Tweedell	Hygeia	11

Hygeia Environmental Laboratories Inc.

82 W. Sierra Madre Blvd
Sierra Madre, California
91024-2434

818-355-4711
FAX: 818-355-4497

NIST / NVLAP Lab Code No. 102116-0
California Dept of Health Services
ELAP Certificate No. 1269

Bulk Sample Analysis Summary

Analytical Method: *EPA 600/M4-82-020*

December 19, 1995

Ms. Deeanne Bryant
Los Angeles Unified School District
PO Box 2298
Los Angeles, CA 90051

Hygeia Ref. No.: *71089950839*
Date Collected: *November 22, 1995*
Date Received: *December 12, 1995*
Date Analyzed: *December 18, 1995*
No. Samples: *11*

Microscopist: *Humberto Espinoza*
Client Project: *993248-258 Bassett Elem.*

Client ID No. / Hygeia ID No.	Sample Description / Color	Asbestos Detected	Analytical Results	Q.C.
993248 324410	12"x12" ceiling tile / tan	No	95% Cellulose 3% Mineral Filler 2% Non-Fibrous Materials	
993249 324411	12"x12" ceiling tile / tan	No	95% Cellulose 3% Mineral Filler 2% Non-Fibrous Materials	
993250 324412	Ceiling tile adhesive / brown	No	5% Cellulose 30% Mineral Filler 65% Organic Binders	
993251 324413	Ceiling tile adhesive / brown	No	5% Cellulose 30% Mineral Filler 65% Organic Binders	
993252 324414	Ceiling tile adhesive / brown	No	5% Cellulose 30% Mineral Filler 65% Organic Binders	
993253 324415	Sand textured ceiling plaster / grey	No	100% Mineral Filler	

Bulk Sample Analysis Summary

Date: *December 19, 1995*
Hygeia Ref. No.: *71089950839*

Microscopist: *Humberto Espinoza*

Client ID No. Hygeia ID No.	Sample Description / Color	Asbestos Detected	Analytical Results	Q.C.
993254 324416	Sand textured ceiling plaster / grey	No	100% Mineral Filler	
993255 324417	Sand textured ceiling plaster / grey	No	100% Mineral Filler	
993256 324418	Sand textured wall plaster / grey	No	100% Mineral Filler	
993257 324419	Sand textured wall plaster / grey	No	100% Mineral Filler	X
993258 324420	Sand textured wall plaster / grey	No	100% Mineral Filler	

Microscopist: Humberto Espinoza G. Laboratory Supervisor: _____

The limit of detection for this analytical method is less than one percent asbestos (visual area estimates).

ASBESTOS BULK SAMPLE SUBMITTAL

SITE NAME: Bassett Elementary School CODE: 2323 PROJECT: Earthquake Damage Repair

SAMPLED BY: Don Calloway DEPT.: ATU TEL. NO.: X5403 DATE SAMPLED 11-22-95

Fill in all information Legibly and Precisely. Sampler should make a copy before submitting to the lab. **DO NOT USE PENCIL** (Rev. 7/95)

Original to EHSB lab with samples. Lab will FAX a copy to ATU with sample numbers. Results sheet to be FAXED to ATU when completed.

LAB NUMBER	SAMPLE NUMBER	BUILDING NUMBER	BUILDING NAME	JOB NUMBER	DSR NUMBER	ROOM NUMBER AND/OR NAME	LOCATION IN ROOM	MATERIAL TYPE (DESCRIBE)	FRIABLE (CIRCLE)
993259	X-150	2D-N	Multi-purpose	6303784	42322	Chair Storage	N/East	Sand textured wall plaster	YES NO
993260	X-151	↓	↓	↓	↓	Faculty Dining Rm	N/East	↓	YES NO
993261	X-152	↓	↓	↓	↓	↓	S/West	↓	YES NO
993262	X-153	↓	↓	↓	↓	Passageway	S/East	↓	YES NO
993263	X-154	↓	↓	↓	↓	Kitchen	N/East	Ceiling plaster above ceiling tiles	YES NO
993264	X-155	↓	↓	↓	↓	↓	S/West	↓	YES NO
993265	X-156	↓	↓	↓	↓	Faculty Dining	N/West	↓	YES NO
993266	X-157	↓	↓	↓	↓	↓	S/East	↓	YES NO
993267	X-158	↓	↓	↓	↓	Chair Storage	C/South	↓	YES NO
									YES NO
									YES NO

71089950840

CHAIN OF CUSTODY:

DATE:	TIME:	NAME: PRINT AND SIGN	DEPARTMENT/AREA	NO. OF SAMPLES:
11-22-95	5:30pm	Donald Calloway Donald Calloway	ATU/19	9
11/27/95	9:00	E.Z. McCoro	EHSS	9
12/12/95	4:40P	E.Z. McCoro	EHSS	9
12-12-95	4:40pm	Terri Tuedell Terri Tuedell	Hygeia	9

Hygeia Environmental Laboratories Inc.

82 W. Sierra Madre Blvd
Sierra Madre, California
91024-2434

818-355-4711
FAX: 818-355-4497

NIST / NVLAP Lab Code No. 102116-0
California Dept of Health Services
ELAP Certificate No. 1269

Bulk Sample Analysis Summary

Analytical Method: *EPA 600/M4-82-020*

December 18, 1995

Ms. Deeanne Bryant
Los Angeles Unified School District
PO Box 2298
Los Angeles, CA 90051

Hygeia Ref. No.: *71089950840*
Date Collected: *November 22, 1995*
Date Received: *December 12, 1995*
Date Analyzed: *December 15, 1995*
No. Samples: *9*

Microscopist: *Jim King*
Client Project: *993259-267 Bassett Elem.*

Client ID No. Hygeia ID No.	Sample Description / Color	Asbestos Detected	Analytical Results	Q.C.
993259 324421	*Sand textured wall plaster / white*	*No*	*100% Mineral Filler*	
993260 324422	*Sand textured wall plaster / white*	*No*	*100% Mineral Filler*	
993261 324423	*Sand textured wall plaster / white*	*No*	*100% Mineral Filler*	
993262 324424	*Sand textured wall plaster / white*	*No*	*100% Mineral Filler*	
993263 324425	*Ceiling plaster / white*	*No*	*100% Mineral Filler*	
993264 324426	*Ceiling plaster / white*	*No*	*100% Mineral Filler*	

Bulk Sample Analysis Summary

Date: *December 18, 1995*
Hygeia Ref. No.: *71089950840*

Microscopist: *Jim King*

Client ID No. Hygeia ID No.	Sample Description / Color	Asbestos Detected	Analytical Results	Q.C.
993265 *324427*	*Ceiling plaster / tan*	*No*	*100% Mineral Filler*	
993266 *324428*	*Ceiling plaster / white*	*No*	*100% Mineral Filler*	
993267 *324429*	*Ceiling plaster / white*	*No*	*100% Mineral Filler*	X

Microscopist: _____ Laboratory Supervisor: _____

The limit of detection for this analytical method is less than one percent asbestos (visual area estimates).

ASBESTOS BL SAMPLE SUBMITTAL

SITE NAME: BASSETT EL CODE: 2323 PROJECT: FLOOR REPAIR

SAMPLED BY: (1541) R.F. BARTSCH JR DEPT. M/O 4 TEL. NO.: 904-2111 DATE SAMPLED: 10-23-95

Fill in all information Legibly and Precisely. Sampler should make a copy before submitting to the lab. DO NOT USE PENCIL (Rev. 4/95)

Original to EHSB lab with samples. Lab will FAX a copy to ATU with sample numbers. Results sheet to be FAXED to ATU when completed.

LAB NUMBER	SAMPLE NUMBER	BUILDING NUMBER	BUILDING NAME	ROOM NUMBER AND/OR NAME	LOCATION IN ROOM	MATERIAL TYPE (DESCRIBE) Floor Tile	FRIABLE (CIRCLE)
991098	1-2323	--2D--N	MULTI PURPOSE BOLD	AUDITORIUM ONLY	9 FEET OUT FROM NORTH WALL (CENTER)	BLACK with white specks	YES (NO)
991099	2-2323	"	"	"	SOUTH WALL CENTER	LIGHT GREY with BLACK + white specks	YES (NO)
991100	3-2323	"	"	"	SOUTH, EAST CORNER	BLUISH GREY with BLACK + white specks	YES (NO)
							YES NO
							YES NO
							YES NO
							YES NO
							YES NO
							YES NO
							YES NO
							YES NO

CHAIN OF CUSTODY:

DATE:	TIME:	NAME: PRINT & SIGN:	DEPARTMENT/AREA:	NO. OF SAMPLES:
10-24-95	7:05	R.F. BARTSCH JR / RF Bartsch	15 / M/O 4	3
10-24-95	7:07	RICK LEE - / Rick Lee	15 - M04	3
10-27-95	1:41 PM	E.C. ALDAYS E.C. Alday	M&O 04	3
10-30-95	11:05	MWMcWilliams M McWilliams	M&O Area 04	3
10-31-95	1:30	DENNIS BOBERTZ D. Bobertz	M&O AREA 4	3
10-31-95	1:30	Patty Filous Patty Filous	EHSB	3

TOTAL P.02

L.A.U.S.D.
Environmental Health and Safety Branch
1449 S. San Pedro St. Rm. 215
Los Angeles CA 90015
(213) 743-5086

ASBESTOS BULK SAMPLE ANALYSIS
LABORATORY REPORT
BASSETT ST ELEM
2323

METHOD EPA/600/R-93/116 (MOD) JULY 1993

LAUSD Lab #	Date Submitted	Mic pst	Date Analyzed	Material Source	Material Description	Chr %	Am %	Oth %	Tot %	Material Background
991098A	10/31/95	NLI	11/14/95	2D-N,MULT.PRPS/AUDIT NO/CENT,FLOOR TILE	NON-HOMOGENEOUS, FLAT SOLID, GREY/BLK,NON-FRIABLE	3	0	0	3	QUARTZ CALCITE PIGMENT
991098B	10/31/95	NLI	11/14/95	2D-N,MULT.PRPS/AUDIT NO/C,FLOOR TILE,MSTC	NON-HOMOGENEOUS, TAR-LIKE, BLK/GREY,NON-FRIABLE	2	0	0	2	1% CELLULOSE TAR,GYPSUM
991099A	10/31/95	NLI	11/14/95	2D-N,MULT.PRPS/AUDIT SO/CENT,FLOOR TILE	NON-HOMOGENEOUS, FLAT SOLID, GREY/BLK,NON-FRIABLE	2	0	0	2	QUARTZ CALCITE PIGMENT
991099B	10/31/95	NLI	11/14/95	2D-N,MULT.PRPS/AUDIT SO/C,FLOOR TILE,MSTC	NON-HOMOGENEOUS, TAR-LIKE, BLACK, NON-FRIABLE	0	0	0	0	10% CELLULOSE GLUE,DEBRIS
991100A	10/31/95	NLI	11/14/95	2D-N,MULT.PRPS/AUDIT SO/EAST,FLOOR TILE	NON-HOMOGENEOUS, FLAT SOLID, GREY, NON-FRIABLE	3	0	0	3	1% CELLULOSE QUARTZ,CALCITE PIGMENT
991100B	10/31/95	NLI	11/14/95	2D-N,MULT.PRPS/AUDIT SO/E,FLOOR TILE,MSTC	NON-HOMOGENEOUS, TAR-LIKE, BLACK, NON-FRIABLE	2	0	0	2	TAR GYPSUM

Signature of Lab Supervisor: [illegible] Signature of Analyst: Molly K. Isaac

NOTE: 0% : No Asbestos Detected; <1% : Asbestos Detected Above 0% and Below or Equal to 1%.
"Quantitation done by optical estimate" 1 - 5% considered non-quantifiable.
This report relates to only the material used.
This report is not used by the LAUSD/EHSB to claim product endorsement by NVLAP or any agency of the U.S. government.

ESTOS BULK SAMPLE LOG.

SITE: Bassett 1
PROJECT: Floor Tile Stripping

SAMPLED BY: Robert Kar Jeff Sissel
DATE SAMPLED: 2/23/95
M & O DISTRICT:

Fill in all information Legibly and Precisely. DO NOT USE PENCIL.
Top (blue) copy to EHSB lab with samples, second (white) copy to ATU, third (yellow) copy to inspector.

Sample #	Lab Sample#	Building	Room/Area	Location in Rm/Ar	Application	Condition	Notes
1	966841	003DON Class Rm	Rm # 12	NE end	Floor Tile	Good	
2	966842	Class Rm	Rm #12	NW end	Floor Tile	Good	
3	966843	Class Rm	Rm #12	SE end	Floor Tile	Good	
4	966844	004DON Class Rm	Rm #14	NW end	Floor Tile	Good	
5	966845	Class Rm	Rm #14	SE end	Floor Tile	Good	
6	966846	Class Rm	Rm #14	South side	Floor Tile	Good	

NOTE: Original analysis summary report to be sent to Asbestos Technical Supervisor.
(Rev 9/93)

WHITE COPY: TO ATU.

L.A.U.S.D.
Environmental Health and Safety Branch
1425 S. San Pedro St. Rm. 215
Los Angeles CA 90015
) 742-7371

ASBESTOS BULK SAMPLE ANALYSIS
LABORATORY REPORT
BASSETT ST ELEM
2323

NVLAP # 1505 Page 1
METHOD EPA/600/R-93/116 (MOD) JULY 1993

LAUSD Lab #	Date Submitted	Mic pst	Date Analyzed	Material Source	Material Description	Chr %	Am %	Oth %	Tot %	Material Background
966841	02/24/95	PF	03/09/95	CLASSRM,RM12,NE END, FLOOR TILE	NON-HOMOGENOUS,SOLID W/TRACE MASTIC,BEIGE TAN,BLACK, NON-FRBLE	0	0	0	0	CELLULOSE 2%,TAR, CALCITE,BINDER
966842	02/24/95	PF	03/09/95	CLASSRM,RM12,NW END, FLOOR TILE	NON-HOMOGENOUS,SOLID W/TRACE MASTIC,BEIGE TAN,BLACK, NON-FRBLE	0	0	0	0	CELLULOSE 2%,TAR, CALCITE,BINDER
966843	02/24/95	PF	03/09/95	CLASSRM,RM12,SE END, FLOOR TILE	NON-HOMOGENOUS,SOLID W/TRACE MASTIC,BEIGE TAN,BLACK, NON-FRBLE	0	0	0	0	CELLULOSE 2%,TAR, CALCITE,BINDER
966844	02/24/95	PF	03/09/95	CLASSRM,RM14,NW END, FLOOR TILE	NON-HOMOGENOUS,SOLID W/TRACE MASTIC,BEIGE LT TAN,BLK,NON-FRBLE	0	0	0	0	CELLULOSE 5%,TAR, CALCITE,BINDER
966845	02/24/95	PF	03/09/95	CLASSRM,RM14,SE END, FLOOR TILE	NON-HOMOGENOUS,SOLID W/TRACE MASTIC,BEIGE LT TAN,BLK,NON-FRBLE	0	0	0	0	CELLULOSE 5%,TAR, CALCITE,BINDER
46	02/24/95	PF	03/09/95	CLASSRM,RM14,SOUTH SIDE,FLOOR TILE	NON-HOMOGENOUS,SOLID W/TRACE MASTIC,BEIGE LT TAN,BLK,NON-FRBLE	0	0	0	0	CELLULOSE 5%,TAR, CALCITE,BINDER

Signature of Lab Supervisor: DeLinne Bryant Signature of Analyst: Patty Titus

: 0% : No Asbestos Detected; <1% : Asbestos Detected Above 0% and Below or Equal to 1%.
"Quantitation done by optical estmate" 1 - 5% considered non-quantifiable.
This report relates to only the material used.
This report is not used by the LAUSD/EHSB to claim product endorsement by NVLAP or any agency of the U.S. government.

ASBESTOS BULK SAMPLE LOG.

SITE: BASSETT ELEMENTARY
PROJECT: HANDICAPPED ACCESS MODIFICATION

TAKEN BY: CHESKI
DATE: 6-1-90
MAINT. AREA: 19 A.T.U.
Lab Received: 6/6/90
GROUP # 875

Fill in all information Legibly and Precisely. DO NOT USE PENCIL
One copy for Area files (if applicable), one copy to Technical Supervisor, original to Safety with samples.

Sample #	Lab Sample#		Building	Room/Area	Location in Rm/Ar	Application	Condition	Notes
D-1	924107		1D-N	SUPPLY ROOM	SOUTH WALL CENTER	9"x9" GREY FLOOR TILE	NON-FRIABLE GOOD	
D-2	924108		"	"	EAST " "	"	"	
D-3	924109		"	"	NORTH WEST CORNER	"	"	
E-1	924110		5D-N	EXTERIOR	NORTH WALL AT FACULTY TOILET	STUCCO	"	
E-2	924111		"	"	EAST WALL AT DRINKING FOUNTAIN	"	"	
E-3	924112		"	"	WEST WALL AT CUSTODIAN Room.	"	"	
F-1	924113	✓	5D-N	GIRLS R.R	WEST WALL IN ACCESS PANEL	(HARD ELBOWS) PIPE INSULATION	"	ON DOMESTIC
F-2	924114	✓	"	BOYS R.R.	EAST WALL IN ACCESS PANEL	"	"	TEMPERED
F-3	924115	✓	"	WATER HTR RM	IN WATER HEATER ROOM	"	"	WATER

NOTE: Analysis report to be attached to this sheet and returned to Asbestos Technical Supervisor

L.A.U.S.D.
Employee Safety Section
1425 S. San Pedro St. Rm. 215
Los Angeles CA 90015
(213) 742-7371

ASBESTOS BULK SAMPLE ANALYSIS
LABORATORY REPORT
BASSETT ST ELEM
2323

NVLAP # 1505

LAUSD Lab #	Date Submitted	Mic pst	Date Analyzed	Material Source	Material Description	Chr %	Am %	Oth %	Tot %	Material Background
924107	06/06/90	DL	06/26/90	1D-N BLDG, SUPPLY RM S WALL, CTR FL TILE	HOMOGENOUS, GRAY, NON-FRIABLE, SOLID	0	0	0	0	CELLULOSE, QUARTZ
924108	06/06/90	DL	06/26/90	1D-N BLDG, SUPPLY RM E WALL, CTR FL TILE	HOMOGENOUS, GRAY, NON-FRIABLE, SOLID	0	0	0	0	SYNTHETICS, QUARTZ, CELLULOSE
924109	06/06/90	DL	06/26/90	1D-N BLDG, SUPPLY RM N/W FLOOR TILE	HOMOGENOUS, GRAY, NON-FRIABLE, SOLID	0	0	0	0	SYNTHETICS, QUARTZ, CELLULOSE, CALCITE
924110	06/06/90	DL	06/26/90	5D-N BLD, EXT FAC RR N WALL STUCCO	HOMOGENOUS, GRAY, NON-FRIABLE, CEMENTITIOUS	0	0	0	0	SYNTHETICS, CALCITE, QUARTZ
924111	06/06/90	DL	06/26/90	5D-N, EXT D/F, EAST WALL STUCCO	HOMOGENOUS, GRAY, NON-FRIABLE, CEMENTITIOUS	0	0	0	0	CELLULOSE, CALCITE, QUARTZ
924112	06/06/90	DL	06/26/90	5D-N, EXT CUSTODIAN RM, W WALL STUCCO	HOMOGENOUS, GRAY, NON-FRIABLE, CEMENTITIOUS	0	0	0	0	CELLULOSE, CALCITE, QUARTZ
924113	06/06/90	DL	06/26/90	5D-N, GIRLS RR, WEST WALL, P/I	HOMOGENOUS, WHITE, NON-FRIABLE, COTTON-LIKE MATERIAL	25	0	0	25	CELLULOSE, BINDER, FIBERGLASS, QUARTZ
924114	06/06/90	DL	06/26/90	5D-N, BOYS RR, EAST WALL, P/I	HOMOGENOUS, WHITE, NON-FRIABLE, COTTON-LIKE MATERIAL	40	0	0	40	CELLULOSE, BINDER, FIBERGLASS, QUARTZ
924115	06/06/90	DL	06/26/90	5D-N, WATER HTR RM, PIPE INSULATION	HOMOGENOUS, WHITE, NON-FRIABLE, COTTON-LIKE MATERIAL	10	0	0	10	CELLULOSE, BINDER, FIBERGLASS, QUARTZ

Signature of Lab Supervisor: J Frall

Signature of Analyst: Donald Forni

NOTE: 0% : No Asbestos Detected; 1% : Asbestos Detected Above 0% and Below or Equal to 1%.

ASBESTOS SURVEY FORM B

MAINTENANCE ORIGINAL

Sample Log

SCHOOL NAME BASSET ELEMENTARY SCHOOL LOCATION CODE 2323

BUILDING NAME BLDG. B BUILDING NO. 4D-N

INSPECTOR'S NAME D.R. OROS NUMBER 1393

MATERIAL	SAMPLE NUMBERS	GRID NUMBER	LABORATORY RESULTS (OFFICE USE ONLY)
Plaster Walls	B1	5	Non Detected
	B2	5	
	B3	5	
	B4	5	
	B5	5	
	B6	5	
	B7	5	
Plaster Ceilings	F1	6	NONE DETECTED
	F2	6	
	F3	6	
	F4	6	
	F5	6	
Pipe Insulation Mud	H1	7	15 Chr. 5 Amos
	H2	7	15 Chr. 5 Amos
	H3	7	45 Chr. 25 Amos

INSPECTOR'S SIGNATURE D.R. Oros DATE 05/24/88

LAUSD FORM NO. 73.667 2/88

16	4D-N B6	L788-128	YELLOW, SOLID	N/D	N/D	N/D	N/D		0	Y	
17	4D-N B7	L788-128	YELLOW, SOLID	N/D	N/D	N/D	N/D		0	Y	
18	4D-N F1	L788-128	YELLOW, SOLID	N/D	N/D	N/D	N/D		0	Y	
19	4D-N F2	L788-128	YELLOW, SOLID	N/D	N/D	N/D	N/D		0	Y	
20	4D-N F3	L788-128	YELLOW, SOLID	N/D	N/D	N/D	N/D		0	Y	
21	4D-N F4	L788-128	YELLOW, SOLID	N/D	N/D	N/D	N/D		0	Y	
22	4D-N F5	L788-128	YELLOW, SOLID	N/D	N/D	N/D	N/D		0	Y	XX
23	4D-N H1	L788-128	WHITE, FIBROUS	15	5	N/D	20	MIN. WOOL CELLULOSE		Y	
24	4D-N H2	L788-128	WHITE, FIBROUS	15	5	N/D	20	MIN. WOOL CELLULOSE		Y	
25	4D-N H3	L788-128	WHITE, FIBROUS	45	25	N/D	70	MIN. WOOL CELLULOSE		Y	XX
26	X-785M C1	L788-128	BROWN, FIBROUS	N/D	N/D	N/D	N/D	CELLULOSE		0	
27	X-785M C2	L788-128	BROWN, FIBROUS	N/D	N/D	N/D	N/D	CELLULOSE		0	
28	X-785M C3	L788-128	BROWN, FIBROUS	N/D	N/D	N/D	N/D	CELLULOSE		0	
29	X1248M C1	L788-128	ORANGE, FIBROUS	N/D	N/D	N/D	N/D	CELLULOSE		0	
30	X1248M C2	L788-128	ORANGE, FIBROUS	N/D	N/D	N/D	N/D	CELLULOSE		0	
31	X1248M C3	L788-128	ORANGE, FIBROUS	N/D	N/D	N/D	N/D	CELLULOSE		0	

Signatures: Lab Director _____ Microscopist _____

Los Angeles Unified School District
Bulk Sample Analysis (Polarized Light Microscopy)
Analysis Protocol: 40 CFR, Part 763, Subpart F, Appendix A

LAUSD Proj. No.: 2323

NVLAP Lab Code No.: #1344

DHS Hazardous Waste Testing
Lab Certification No.: #243

Laboratory Name: BSE Labs Inc.

Address: 50 East Foothill Blvd.
Arcadia, CA 91006

Microscopist: Wendy Liu

Date: 7/14/88

Contract No.: 885656

BLI Rpt No.: 737

	LAUSD Sample No.	BLI Ref. No.	Sample Description	Asbestos				Non Asbestos		Q.C.
				% Chr.	% Amos.	% Other	% Total	Fibrous	Non Fibrous	
1	1D-N C1	L788-128	ORANGE, FIBROUS	N/D	N/D	N/D	N/D	CELLULOSE	0	
2	1D-N C2	L788-128	ORANGE, FIBROUS	N/D	N/D	N/D	N/D	CELLULOSE	0	
3	1D-N C3	L788-128	ORANGE, FIBROUS	N/D	N/D	N/D	N/D	CELLULOSE	0	
4	1D-N C4	L788-128	ORANGE, FIBROUS	N/D	N/D	N/D	N/D	CELLULOSE	0	XX
5	1D-N C5	L788-128	ORANGE, FIBROUS	N/D	N/D	N/D	N/D	CELLULOSE	0	
6	1D-N C6	L788-128	ORANGE, FIBROUS	N/D	N/D	N/D	N/D	CELLULOSE	0	
7	1D-N C7	L788-128	ORANGE, FIBROUS	N/D	N/D	N/D	N/D	CELLULOSE	0	
8	3D-N G1	L788-128	WHITE, MASSIVE	N/D	N/D	N/D	N/D	CELLULOSE	Y	
9	3D-N G2	L788-128	WHITE, MASSIVE	N/D	N/D	N/D	N/D	CELLULOSE	Y	
10	3D-N G3	L788-128	WHITE, MASSIVE	N/D	N/D	N/D	N/D	CELLULOSE	Y	
11	4D-N B1	L788-128	YELLOW, SOLID	N/D	N/D	N/D	N/D	0	Y	
12	4D-N B2	L788-128	YELLOW, SOLID	N/D	N/D	N/D	N/D	0	Y	
13	4D-N B3	L788-128	YELLOW, SOLID	N/D	N/D	N/D	N/D	0	Y	
14	4D-N B4	L788-128	YELLOW, SOLID	N/D	N/D	N/D	N/D	0	Y	XX
15	4D-N B5	L788-128	YELLOW, SOLID	N/D	N/D	N/D	N/D	0	Y	

Signatures: Lab Director _____ Microscopist Wendy Liu

GRID #5
"B" 1-7

BASSETT EL
* 2323

Building 4D-N

6	4	3
1	5	
	2	7

PLASTER WALLS

APPENDIX B: Asbestos Survey Form A

ASBESTOS SURVEY FORM A
Reinspection Survey

School Name: BASSETT ELEM. SCHOOL Loc. Code: 2323

Building Name: ADMINISTRATIVE BLDG. Building Number: 001 DAN

Building Square Feet: 2,560 Height of Typical Room: 12'

Inspector: ROBERT ESTRADA Number: BI-15921

Type of Suspected Material	Specific Location	Req. # of Samples	Asbestos Present	
A. WOOD ~~Plaster~~ Ceilings	LIBRARY, FIRE ALARM CONTROL PANEL ROOM, & THRU-OUT MAIN OFFICES. ~~All except noted below~~	N/A	11-18-95	
B. SAND Plaster Walls	LIBRARY, WOMENS R/R AND THRU-OUT MAIN OFFICES ~~All except noted below~~	3	NEG	
C. 12"x12" STRAIGHT Ceiling Tiles	LIBRARY, FIRE A.C.P. RM., & THRU-OUT MAIN OFFICES	7	NEG. 5-24-88	
D. 9"x9" GRAY FLOOR TILE	SUPPLY ROOM AND THRU-OUT MAIN OFFICES.	3+3	POS 2-1-95 NEG. 9/4/90	REMOVE AS OF 10/7/00
(E.) PIPE INSULATION MUD	KITCHEN AREA, INSIDE EXTERIOR PORTICO ATTIC	2	POS. 10-9-07	
F. 9"x9" GRAY FLOOR TILE W/ MASTIC	LIBRARY	1	POS 11-18-95	REMOVE AS OF 3/28/9
G. 9"x9" DK. GRAY W/BLK. STREAKS FLOOR TILE	F.A.C.P. ROOM	3	POS. 12-16-94	REMOVE AS OF 10/3/00
H. ROLL ROOF	ARCADE ROOF	3	NEG. 11-18-95	REMOVE AS OF 5/28/98
REMOVED I. FOAMED ROOF	ROOF	3	NEG. 11-18-95	
J. CEILING STUCCO	ARCADE	3	NEG. 11-18-95	
K. CEILING STUCCO	ROOF PORTICO OVERHANG	1	NEG. 11-18-95	
L. STUCCO	EXTERIOR	+3 1	1-4-02 POINT COUNT NEG. 11-18-95	

Inspector's Signature: Robert Estrada Date: 10/4/00

	Type of Suspected Material	Specific Location	Req. # of Samples	Asbestos Present
M.	SAND TEXTURED PLASTER ON SOFFIT (SAME AS WALLS)	LIBRARY, PASSAGE WAY, WORK RM. FRONT OFFICE, & ASST. PRINCIPALS OFFICE	1	NEG. 11-18-95
N.	9"x9" GRAY W/BLK. & TAN STREAKS. FLOOR TILE (REMOVED AS OF 3/28/97)	LIBRARY & LIBRARY STORAGE ROOM.	3	POS. 11-18-95
O.	DUST BARRIER PAPER	WOMENS R/R, LIBRARY, FIRE A.C.P. RM., AND FRONT OFFICE	1+6	11-18-95 NEG 10-30-06
P.	CAPSHEET (REMOVED AS OF 5/28/98)	ROOF ARCADES	5	NEG. 4-22-97
Q.	ROOF MASTIC (REMOVED AS OF 5/28/98)	ROOF ARCADES	1	POS. 11-17-97
R.	12"x12" BLUE FLOOR TILE	LIBRARY		ASSUMED.
S.	12"x12" WHITE FLOOR TILE	LIBRARY		ASSUMED.
T.	12"x12" BEIGE FLOOR TILE	OFFICES, WORKROOM, PASSAGE WAYS, SUPPLY RM, COPY RM., PRINCIPALS OFFICE, MAIN OFFICE, ASST. OFFICE, NURSE, & COTT RM.		ASSUMED
U.	12"x12" RANDOM CEILING TILE	WOMENS R/R AND FRONT OF R/R HALLWAY.		ASSUMED
V.	WALL HEATER	NURSES KITCHEN, & COPY ROOM.		~~Assumed~~ N/S 1-4-02
W.	WINDOW PUTTY	EXT	3	POS 1-4-02
X.	PLASTER ON SOFFIT	EXT	1	NEG-RNT COUNT
Y.	~~PIPE INSULATION MUD~~ (WRONG BLDG)	~~WATER HEATER ROOM~~	~~1~~	~~POS 12/10/08~~
Z.	PENETRATION ~~MASTIC~~ (REMOVED 2/2016)	~~ROOF~~	3	~~POS~~. 11-2-09 C.M
AA.	~~ROLLED ROOF~~ ROOF PATCH	~~ROOF~~ ROOF	~~3~~ 3	~~NEG 11/2/09~~ NEG 6/23/15
BB.	MASTIC			
CC.	INT & EXT DOORS	THROUGHOUT BUILDING		ASSUMED

Inspector's Signature: Robert Estrada Date: 10/4/00

ASBESTOS SURVEY FORM A
Reinspection Survey

School Name: BASSETT ELEM. SCHOOL Loc. Code: 2323

Building Name: MULTI PURPOSE BLDG. Building Number: 002 DAN

Building Square Feet: 5,292 Height of Typical Room: 15'

Inspector: ROBERT ESTRADA Number: BI-15921

Type of Suspected Material	Specific Location	Req. # of Samples	Asbestos Present
A. SAND Plaster Ceilings	FAN Rm., HEATER Rm., & MECHANICAL Rm. ~~All except noted below~~	3	NEG. 11-21-95
B. SAND Plaster Walls	FAN Rm., HEATER Rm., & MECHANICAL Rm. ~~All except noted below~~	3	NEG. 11-18-95
C. 12"x12" STRAIGHT Ceiling Tiles	AUDITORIUM, AUD. STORAGE RM., PASSAGE WAY, FACULTY DINING, COTT Rm., KITCHEN AREA, AUD. GIRLS & BOYS R/R.	3	NEG. 11-22-95
D. 9"x9" DK. GRAY & BLACK FLOOR TILE w/mastic	AUDITORIUM * ~~FACULTY D/R.~~ * ~~PASSAGEWAY, CHAIR STORAGE~~ *	1 / 4	POS. 10-23-95 REM * / POS. 8-22-98 All Ex AUDIT
E. 9"x9" BLACK w/WHT. SPECKS FLOOR TILE w/mastic	~~FACULTY DINING RM.~~, * ~~CHAIR STORAGE~~, & * ASSEMBLY. *	2 / 1	POS. 8-22-98 Removed * / POS. 10-23-95
F. 9"x9" BLUISH GRAY w/BLK & WHT. FLOOR TILE	ASSEMBLY *	1	Removed * POS. 10-23-95
G. 9"x9" LT. GREEN w/WHT. STREAKS FLOOR TILE	AUD. FOYER, ASSEMBLY Rm.		REMOVED Assumed
H. 12"x12" LT. GRAY MIX w/WHITE FLOOR TILE	AUDITORIUM * FOYER PATCH	1	Removed * POS 10-23-95
I. 12"x12" LT GREEN & GREEN MIX. FLOOR TILE	AUD. STORAGE Rms., FACULTY DINING Rm., PASSAGEWAY, COTT Rm.		ASSUMED
J. 12"x12" STRAIGHT WALL TILE	AUDITORIUM	3	NEG. 5-24-88
K. BARRIER PAPER (UNDER WOOD FLOORING)	STAGE AREA		Assumed POS 9-9-88
L. PIPE INSULATION ELBOWS	FAN Room, ~~ATTIC~~, AND HEATER Room CEILING SPACE OF FACULTY DINING & LOUNGE	3 / 3	POS. 5-31-90

Inspector's Signature: Robert Estrada Date: 10/4/00

	Type of Suspected Material	Specific Location	Req. # of Samples	Asbestos Present
M.	BOILER (AJAX) (BOILER BLOCK INSULATION)	BOILER ROOM		Assumed
N.	FIRE DOORS	AUDITORIUM (3 EA.), FAN ROOM, ATTIC DOOR & BOILER ROOM, FACULTY DINING RM.		Assumed
O.	DUCT TAPE & DUCT CLOTH	HEATER ROOM & FAN ROOM	6+1	NEG 5-31-90 NEG 11-18-95
P.	WALL FURNACE (WILLIAMS)	FACULTY DINING RM, & RESTROOM		~~Assumed~~ N/S
Q.	WATER HEATER (DAY & NIGHT)	STORAGE ROOM		~~Assumed~~ N/S
REMOVED AS OF 10-3-00 R.	PIPE INSULATION	STORAGE ROOM	2	POS. 9-9-88
REMOVED AS OF 6-5-98 S.	Roll ROOF	ROOF	3	NEG. 11-18-95
T.	KICKSHEET	ROOF (AROUND VENT ABOVE KITCHEN AREA).	3	NEG. 11-18-95
U.	ROOF CEILING STUCCO	ROOF OVERHANG	1	11-18-95 Assumed
V.	STUCCO	EXTERIOR	1+7	11-18-95 Neg 2-6-02 NEG POINT COUNT.
W.	PLASTER ON SOFFIT	AUDITORIUM	3	NEG. 11-21-95
X.	SMOOTH TEXTURED WALLS	KITCHEN & LOCKER RM.	5	NEG. 11-22-95
Y.	SMOOTH TEXTURED CEILING	KITCHEN & R/R BY KITCHEN	3	NEG. 11-22-95
Z.	SAND PLASTER WALLS	AUD. GIRL-BOYS R/R, STAGE, AUDITORIUM, HOPPER RM., STORAGE RMS, CHAIR STORAGE, FACULTY DINING RM.	13	NEG. 11-22-95
AA.	SAND PLASTER CEILING	KITCHEN, FACULTY D/R., CHAIR STORAGE, AUDITORIUM, FOYER, HOPPER RM., STORAGE ROOMS, STAGE, BOYS R/R.	11	NEG. 11-22-95
BB.	CEILING TILE ADHESIVE	AUDITORIUM, STORAGE RM., KITCHEN, FACULTY DINING RM., GIRLS R/R.	3	NEG. 11-22-95
REMOVED AS OF 6-5-98 CC.	CAPSHEET	ROOF	9	NEG. 4-22-97

Inspector's Signature: Robert Estrada Date: 10/4/00

ASBESTOS SURVEY FORM A
Reinspection Survey

School Name: BASSETT ELEM. SCHOOL Loc. Code: 2323

Building Name: MULTI PURPOSE BLDG. Building Number: 002 DAN

Building Square Feet: 5292 Height of Typical Room: 15'

Inspector: ROBERT ESTRADA Number: BI-15921

Type of Suspected Material	Specific Location	Req. # of Samples	Asbestos Present
A. Plaster Ceilings	All except noted below		
B. Plaster Walls SAND (DEBRIS)	ATTIC ABOVE STAGE ~~All except noted below~~	3	NEG 11-06-06
C. Ceiling Tiles			
D. DUCT SEAM TAPE	HEATER Room & FAN Room.	3 3	NEG 9-9-98 2-6-02
E. WINDOW PUTTY BLACK/RED	EXT	3	4-02 POS
F. VIBRATION Reducer Fiberglass	BOILER & FAN Room	3 ~~8~~	NEG- 2-6-02 D.C.
G. Duct INSULATION	FAN Room	N/A	
H. BLACK ROOF MASTIC	ROOF	3	NEG- 2-6-02 D.C.
I. HEAT BARRIER PAPER	FACULTY DINING OVER RANGE TOP		ASSUMED
J. STUCCO CEILING	LUNCH SHELTER, PORTICOS		ASSUMED
K. Floor Tile 9x9 DK. Green w/Adhesive	Faculty lounge		REMOVED Assumed
L. Blue Fabric stage Curtains	stage	3	Neg. D.C. 3/28/07

Inspector's Signature: Robert Estrada Date: 10/4/00

Type of Suspected Material	Specific Location	Req. # of Samples	Asbestos Present
M. Tan fabric. stage Curtains	stage	3	Neg. D.C. 3/28/07
N. wall Plaster Debris	ATTIC Above stage	3	NEG. 11-06-06
O. DRYWALL FLOOR NO JCT	ASSEMBLY LARGE SOFFIT ASSEMBLY		ASSUMED
P. DRYWALL FIREWALL W/ JCT	ACCESS IN LARGE SOFFITS		ASSUMED
Q. ROOF PATCH MASTIC CAPSHEET	ROOF (UPPER & LOWER)	3	NEG 6/29/15
R.	ROOF (upper and lower)	3	NEG 6/29/15
S. ROOF PATCH MASTIC INT & EXT	ROOF - ARCADE SEE ALSO BLDGS. 006DAN and 007DAN	1	NEG 6/29/15
T. DOORS	THROUGH-OUT BUILDING		ASSUMED (POS)
U.			
V.			
W.			
X.			
Y.			
Z.			
AA.			
BB.			
CC.			

Inspector's Signature: _____ Date: _____

ASBESTOS SURVEY FORM A
Reinspection Survey

School Name: BASSETT ELEM. SCHOOL Loc. Code: 2323

Building Name: BLDG. A Building Number: 003 DAN

Building Square Feet: 3,563 Height of Typical Room: 12'

Inspector: ROBERT ESTRADA Number: BI-15921

Rm 35 = Resource Rm
Rm 31 & 32 = LIBRARY

Type of Suspected Material	Specific Location	Req. # of Samples	Asbestos Present
A. ~~Plaster~~ WOOD Ceilings	All except noted below	N/A	
B. SAND Plaster Walls	Rooms # 31A, 31B, 32, 35, 36. ~~All except noted below~~	3	11-18-95 NEG
C. 12"X12" STRAIGHT Ceiling Tiles	Rooms # 31A, 31B, 32, 35, 36.	1+3	11-18-95 NEG 10/30/06
Rm 32 REMOVED AS OF 12-7-94 D. 12"X12" LT. BROWN MIX FLOOR TILE	Rooms # ~~32~~, 35, 36	5	Pos. — mastic only 1-11-07
REMOVED 12-5-94 E. 9"X9" GREEN FLOOR TILE w/mastic	Rooms # 31A, 31B	3	Pos. 11-18-95
F. WALL FURNACE (WILLIAMS)	Room # 15B		Assumed REM AS OF 10-4
Jet? G. DRYWALL WALL	Rooms # 31A, 31B & corridor.	3 3	NEG. 5-24-88 NEG. 11-17-97
H. 9"X9" TAN/BLACK FLOOR TILE w/mastic	Rooms # 32A, 32B	3	NEG. 2-23-95
I. FOAMED ROOF	Roof	3	NEG. 11-18-95
J. ACOUSTICAL PLASTER	Roof Overhang Arcade	1+2	11-18-95 p.c. NEG 1-4-02
K. STUCCO	Exterior	2+1	11-18-95 NEG 1-4-02 POINTCOUNT.
L. SAND TEXTURED PLASTER ON SOFFIT	SAME AS WALLS Rooms # 31A, 31B, 32, 35, 36.	1	11-18-95 NEG

Inspector's Signature: Robert Estrada Date: 10/4/00

* FORMER CLASSROOMS:
10A, 10B, 11, 12, 13, 15A & 15-B

	Type of Suspected Material	Specific Location	Req. # of Samples	Asbestos Present
REMOVED AS OF 12-28-98 M.	ROOF MASTIC	ROOF ARCADE	1	POS. 11-17-97
N.	WALL HEATER (HERMAN NELSON)	REMOVED Rooms # ~~32~~, 35, 36		~~Assumed~~ N/S
REMOVED ~~12-28~~ O.	12-5-05 WALL HEATER (MONTEREY)	Room # 31 A		~~Assumed~~ 1-4-02
P.	WINDOW PUTTY	EXT	3	POS
Q.	PLASTER SAND	ROOF ARCADE EAST & WEST	2+1	NEG. 11-18-95 1-4-02 POINT COUNT
R.	GREEN CARPET	NEW WOMEN OF READING LIBRARY		NEG. 12-5-05 - M.C.
S.	CEILING BARRIER PAPER	ROOMS: 32, 35, 36	3	NEG 10-30-02
T.	INT & EXT DOORS	THROUGHOUT BUILDING		ASSUMED (POS)
U.				
V.				
W.				
X.				
Y.				
Z.				
AA.				
BB.				
CC.				

Inspector's Signature: Robert Estrada Date: 10/4/00

ASBESTOS SURVEY FORM A
Reinspection Survey

School Name: BASSETT ELEM. SCHOOL Loc. Code: 2323

Building Name: Utility & Classroom BLDG. B Building Number: 004 DAN

Building Square Feet: 4,231 Height of Typical Room: 12'

Inspector: ROBERT ESTRADA Number: BE-15921

Type of Suspected Material	Specific Location	Req. # of Samples	Asbestos Present
A. ~~Plaster~~ WOOD Ceilings	All except noted below	N/A	
B. SAND Plaster Walls	All except noted below	3 / 7	NEG. 11-18-95 / NEG. 5-24-88
C. 12"x12" STRAIGHT Ceiling Tiles	BOOK ROOM & Rooms # 33, 34, 37, 38	1+3	11-18-95 / NEG 10-30-06
D. KILN (SITTER)	KILN ROOM		Assumed
E. 12"x12" LT. BROWN MIX FLOOR TILE	Rooms # 33, 34, 37, 38		Assumed
F. SAND PLASTER CEILING	BOILER RM. & KILN RM. & ELECTRIC RM.	5	NEG. 5-24-88
G. BOILER (AJAX) (BOILER BLOCK INSULATION)	BOILER ROOM		Assumed
REMOVED BY CONT. 7-01-05 SEE RECORD H. PIPE W/ELBOWS * INSULATION MUD	(ATTIC) & BOILER RM.	3	POS. 5/24/88
I. FIRE DOOR	BOILER ROOM		Assumed
J. WALL HEATER (WILLIAMS)	BOOKROOM		Assumed
K. 9"x9" LT. TAN / BLK FLOOR TILE	Room 33	3	NEG. 2-23-95
L. PIPE INSULATION	BOOKROOM	3	POS. 4-20-95

REMOVED AS OF 10-3-

Inspector's Signature: Robert Estrada Date: 10/4/00

Type of Suspected Material	Specific Location	Req. # of Samples	Asbestos Present
M. FOAMED ROOF	ROOF	3	NEG. 11-18-95
N. ~~CEILING~~ STUCCO CEILING	ROOF OVERHANG	1+2	11-18-95 NEG 1-4-02 POINT COUNT
O. STUCCO	EXTERIOR	2+1	11-18-95 NEG 1-4-02 POINT COUNT
P. SAND TEXTURED PLASTER ON SOFFIT	SAME AS WALL Rooms # 33,34,37,38	1	11-18-95 NEG
Q. DUST BARRIER PAPER	Rooms # 33,34,37,38	1+3	NEG 10-30-06
R. WALL HEATER (HERMAN NELSON)	Rooms # 33,34,37,38 (COUNTER TOP)		~~Assumed~~ N/S
S. TRANSITE CEMENT BOARD	KILN ROOM		Assumed 1-4-02
T. WINDOW Putty	EXT	3	POS 1-4-02
U. ARCADE PLASTER	EXT	2	Neg - POINT COUNT
V. SAND PLASTER WALLS	BOILER Room, ELECTRICAL Room	3	NEG 10-30-06
W. ROOF PATCH MASTIC	ROOF - ARCADE SEE ALSO BLDG 002DAN & 006DAN	1	NEG 6/29/15
X. INT & EXT DOORS	THROUGHOUT BUILDINGS		ASSUMED (POS.)
Y.			
Z.			
AA.			
BB.			
CC.			

Inspector's Signature: Robert Estrada Date: 10/4/00

ASBESTOS SURVEY FORM A
Reinspection Survey

School Name: BASSETT ELEM. SCHOOL Loc. Code: 2323

Building Name: BLDG. C Building Number: 005 DAN

Building Square Feet: 5330 Height of Typical Room: 12'

Inspector: ROBERT ESTRADA Number: BI - 15921

Type of Suspected Material	Specific Location	Req. # of Samples	Asbestos Present
A. SAND Plaster Ceilings	All except noted below		Assumed 11-18-95 6-2-04 NEG
B. SAND Plaster Walls	Rooms # 26, 27, 28, 29, 30 FACULTY R/R, BOY & GIRLS R/R, HOPPER Rm., BOILER Rm. All except noted below	3+3	11-18-95
C. 12"X12" STRAIGHT Ceiling Tiles	Rooms # 26, 27, 28, 29, 30 FACULTY R/R AND GIRLS R/R	1+3	NEG. 10-30-06 11-18-95
D. 12"X12" LT. BROWN FLOOR TILE w/ MASTIC	Rooms # 28, 29, 30	3	NEG. - TILE Pos. - MASTIC
E. 12"X12" GOLD FLOOR TILE w/ MASTIC	Room # 26, 27	3	Pos. 11-18-95
F. WOOD CEILING	BOYS RESTROOM	N/A	
G. WATER HEATER (HOYT)	HEATER ROOM		N/S ~~Assumed~~
H. SAND PLASTER CEILING	HEATER ROOM & HOPPER ROOM, BROOM CLOSET,	3	NEG. 11-18-95
I. PIPE INSULATION ELBOWS	BOYS - GIRLS R/R. CEILING SPACE (IN ACCESS PANEL), ~~ATTIC~~, ~~*WATER HEATER RM.~~ *	3	Pos. 6-1-90 * REMOVED AS OF 10-4-00
J. STUCCO	EXTERIOR BLDG.	3	6-1-90 NEG
K. FOAMED ROOF	ROOF	3	NEG. 11-18-95
L. CEILING STUCCO	ROOF OVERHANG	1+2	11-18-95 NEG 1-4-02

Inspector's Signature: Robert Estrada Date: 10/4/00

	Type of Suspected Material	Specific Location	Req. # of Samples	Asbestos Present
M.	SAND TEXTURED SAME AS WALLS PLASTER ON SOFFIT	Rooms # 26,27,28,29,30	1	11-18-95 NEG
N.	BARRIER PAPER	Rooms # 26,27,28,29,30	1+3	11-18-95 NEG 10-30-06
REMOVED AS OF 5-28-98 O.	ROOF MASTIC	BLDG. C ARCADE	1	POS. 11-17-95
P.	WALL HEATER (HERMAN NELSON) WINDOW	Rooms # 26,27,28,29,30		~~Assumed~~ N/S 1-4-02
Q.	PUTTY	EXT	3	POS
R.	PLASTER ON ARCADE SOFFIT	ARCADE EAST & WEST	2	NEG 1-4-02 POINT COUNT
	PIPE INSULATION			POS 12/10/08
Removed as of 12-3-09 (S.)	MUD	~~WATER HEATER RM~~	1	~~ASSUMED~~
T.	INT & EXT DOORS	THROUGHOUT BUILDING		ASSUMED (POS)
U.				
V.				
W.				
X.				
Y.				
Z.				
AA.				
BB.				
CC.				

Inspector's Signature: Robert Estrada Date: 10/4/00

ASBESTOS SURVEY FORM A
Reinspection Survey

School Name: BASSETT ELEM. SCHOOL Loc. Code: 2323

Building Name: BLDG. D Building Number: 006 DAN

Building Square Feet: 2,059 Height of Typical Room: 12'

Inspector: ROBERT ESTRADA Number: BI-15921

Type of Suspected Material	Specific Location	Req. # of Samples	Asbestos Present
A. ~~Plaster~~ WOOD Ceilings	All except noted below	N/A	
B. SAND Plaster Walls	Rm. 39, BOYS & GIRLS R/R, BALL RM, P.M. OFFICE, HEATER RM, FACULTY R/R. ~~All except noted below~~	3	11-21-95 NEG
C. 12"x12" STRAIGHT Ceiling Tiles	FACULTY R/R, Rm. 39, AND BALL RM.	2+3	11-18-95 NEG 10-30-06
Removed * D. 9"x9" GREEN/BLUE FLOORTILE W/MASTIC	Room 39 *	3	POS. 11-18-95
E. WATER HEATER (AMERICAN)	WATER HEATER ROOM		N/S ~~Assumed~~
F. SAND PLASTER CEILING	HEATER RM, BROOM CLOSET, PLANT MANAGERS OFFICE.	3	NEG 11-21-95
G. WALL FURNACE (WILLIAMS)	BALL RM. & P.M. OFFICE		N/S ~~Assumed~~
Removal 6/24/99 H. CEILING STUCCO	ROOF OVERHANG	1	Assumed 11-18-95 M.G.
I. ROLL ROOF	ROOF	3	NEG. 11-18-95
J. KICKSHEET	ROOF	3	NEG. 11-18-95
K. SAND PLASTER ON SOFFIT	Room 39	1	11-21-95 NEG
L. STUCCO	EXTERIOR	+2	11-18-95 NEG 1-4-02 POINT COUNT

Inspector's Signature: Robert Estrada Date: 10/4/00

	Type of Suspected Material	Specific Location	Req. # of Samples	Asbestos Present
Removed 4/29/99	M. ~~PIPE MASTIC~~	ROOF	3	~~POS. 4-25-98~~
	N. ~~PITCH POCKET~~	~~ROOF~~	3	~~POS. 4-25-98~~
	O. WALL HEATER (HERMAN NELSON)	Room #39		~~Assumed~~ N/S
Removed 7/25/07	P. 9"x9" DK. GREEN FLOOR TILE	(PATCHES) Room #39		Assumed
	Q. 9"x9" LT. GREEN w/WHITE STREAKS. FLOOR TILE	(PATCHES) Room #39		Assumed 1-4-02
	R. WINDOW PUTTY	EXT.	3	POS
	S. DUST BARRIER PAPER 12 x 12 BLUE	FACULTY R/R, BALLRM & Rm 39	3	NEG 10-30-06
	T. FLOOR TILE 12 x 12 LT. BLUE	RM 39		ASSUMED
	U. FLOOR TILE	↓		↓
	(V.) PIPE INSULATION ELBOWS	ATTIC SPACE OVER RR, & PM OFFICE		ASSUMED
	W. ROOF PATCH MASTIC	ROOF - ARCADE SEE ALSO BLDGS. 002DAN AND 004DAN	1	NEG 6/29/15
	X. INT & EXT DOORS	THROUGHOUT BUILDING		ASSUMED (POS)
	Y.			
	Z.			
	AA.			
	BB.			
	CC.			

Inspector's Signature: Robert Estrada Date: 10/4/00

ASBESTOS SURVEY FORM A
Reinspection Survey

School Name: BASSETT ELEM. SCHOOL Loc. Code: 2323

Building Name: KINDERGARDEN BLDG. Building Number: 007 DAN

Building Square Feet: 2004 Height of Typical Room: 12'

Inspector: ROBERT ESTRADA Number: BI-15921

Type of Suspected Material	Specific Location	Req. # of Samples	Asbestos Present
A. SAND Plaster Ceilings	STORAGE RM. ~~All except noted below~~	3	NEG 10-30-06 11-18-95
B. SAND Plaster Walls	Rooms # 22, R/R, 23 All except noted below	3	NEG 11-18-95
C. 12"x12" STRAIGHT Ceiling Tiles	Rooms # 22, 23	1+3	NEG 10-30-06
REMOVED 7-10-95 D. 9"x9" GRAY FLOOR TILE	Rooms # 22, 23	6	Pos. 2-1-95 REMOV AS OF 7-10-9
REMOVED E. ~~FOAMED ROOF~~	~~ROOF~~	~~3~~	~~NEG. 11-18-95~~
F. CEILING STUCCO	ROOF OVERHANG	1	Assumed 11-18-95
G. STUCCO	EXTERIOR	2+ 1	11-18-95 NEG 1-4-02 POINT COUNT
H. SAND TEXTURED PLASTER ON SOFFIT	SAME AS WALLS Rooms # 22, 23	1	11-18-95 ~~NEG~~ NEG
I. DUST BARRIER PAPER	Rooms # 22, 23	1	NEG 10-30-06
REMOVED J. ~~PIPE MASTIC~~	~~ROOF~~	~~3~~	~~POS. 4-25-98~~
K. WALL HEATER (HERMAN NELSON)	Rooms # 22, 23		N/S ~~Assumed~~
L. 12"x12" LT. BLUE MIX FLOOR TILE	Rooms # 22, 23		ASSUMED

Inspector's Signature: Robert Estrada Date: 10/04/00

	Type of Suspected Material	Specific Location	Req. # of Samples	Asbestos Present
M.	WINDOW PUTTY	EXT	3	1-4-02 POS
N.	~~MASTIC~~ PENETRATION	~~ROOF~~	~~3~~	~~POS. 11-2-09 C.M.~~
O.	~~ROLLED ROOF~~	~~ROOF~~	~~3~~	~~NEG 11/2/09~~
P.	INT & EXT DOORS	THROUGHOUT BUILDING		ASSUMED (POS)
Q.				
R.				
S.				
T.				
U.				
V.				
W.				
X.				
Y.				
Z.				
AA.				
BB.				
CC.				

REMOVED 2/2016

Inspector's Signature: _____ Date: _____

ASBESTOS SURVEY FORM A
Reinspection Survey

School Name: BASSETT ST EL Loc. Code: 2323

Building Name: 2/3 UNIT RELOCATABLE Building Number: 232318 ~~3499~~ Y

Building Square Feet: 1440 Height of Typical Room: 8'

Inspector: R. BOWIE Number: 1033

PACESETTER 97 336 101 350 A A 68 794

Type of Suspected Material	Specific Location	Req. # of Samples	Asbestos Present
A. ~~Plaster~~ Wood Ceilings	All except noted below	N/A	
B. ~~Plaster~~ Walls DRYWALL Behind FIBERBOARD PANELS	NO MUD All except noted below	3	NEG 11-14-01,
C. Ceiling Tiles 2X4 FIBERGLASS	Room's 18 & 19 ABOVE CT	N/A	
D. BATTING INSULATION FIBERGLASS 12X12 White	Room's 18 & 19	N/A	
E. FLOOR TILE 3" BROWN	Rooms 18 & 19		
F. COVE BASE W/MASTIC	Room's 18 & 19		
G. DECKING NON-SKID	EXTERIOR RAMP. RMS. 18 & 19	3	NEG. 06/02/0 ~~ACM~~
H. ROOF PATCH MASTIC	ROOF PACESETTER	3	POS - ACM 6/23/15
I.	See Attached Letter		
J.	EXCLUDED FROM AHERA INSPECTION BUT SUBJECT TO ASBESTOS SURVEY PRIOR TO ANY DISTURBANCE/RENOVATION/DEMOLITION ACTIVITY		
K.			
L.			

REMOVED 2/2016

Inspector's Signature: Ryan Bowie Date: 6-20-02

INTER-OFFICE CORRESPONDENCE
Los Angeles Unified School District

TO: AHERA File **DATE:** 12-04-07

FROM: Timothy Lentz, Project Manager II

SUBJECT: Certification of Pace Setter Relocatable Classroom Buildings

During my tenure in the District's Relocatable Housing Unit, I was personally involved in obtaining from Pace Setter a letter certifying that no asbestos containing building materials were used in the manufacture of their relocatable classroom buildings. I personally had a copy of the letter in my possession during the time I was assigned to the Relocatable Housing Unit. The original letter from Pace Setter apparently has been lost or misplaced.

Based upon these facts, I certify that to the best of my knowledge, no asbestos containing building material was used on the manufacture of the Pace Setter relocatable classroom buildings at various locations in the District.

DEC 12 2007

Timothy Lentz
Accredited Asbestos Building Inspector Certificate No. 02260 California

Site Name: Bassett St. E.S.

Location Code: 2323

Building Number: 232318 x 34 95 Y

Serial Number: 97-336-101-350A,B.

LOS ANGELES UNIFIED SCHOOL DISTRICT
Asbestos Technical Unit

To Whom It May Concern:

From: Rick Henry, Facilities Service Director
Asbestos Technical Unit, Central Shops

Subject; Post A.H.E.R.A. Modular Buildings

A certified Asbestos Inspector has reviewed documents pertaining to the building/s listed below. Documents in the possession of the Los Angeles Unified School District indicate that no asbestos-containing building materials (ACBM) were specified in the construction of the building/s. A letter from the manufacturer is attached.

SITE: Bassett ST. E.S. LOCATION CODE: 2323

Building number: 232318 Manufacture: Pacesetter

Serial #: 97-336-101-350A,B.

Date of construction: 1997 Date of inspection: 12-04-07

Certified Inspector: Donald Calloway

Inspector's signature: Donald Calloway **Date: 12-04-07**

APPENDIX C: CNS Environmental's Certifications

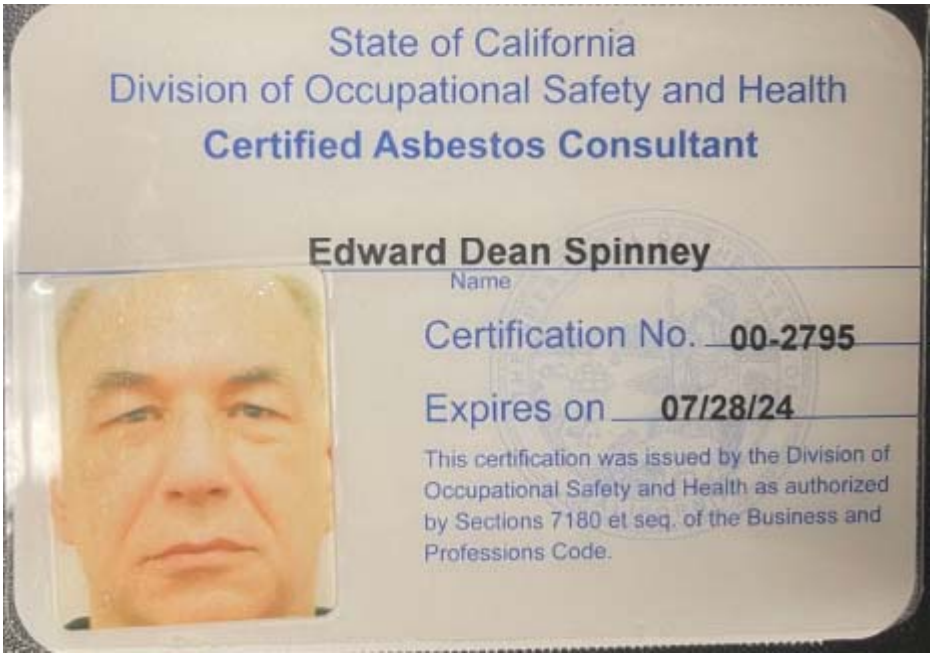
State of California
Division of Occupational Safety and Health
Certified Asbestos Consultant
Edward Dean Spinney
Name
Certification No. 00-2795
Expires on 07/28/24
This certification was issued by the Division of Occupational Safety and Health as authorized by Sections 7180 et seq. of the Business and Professions Code.

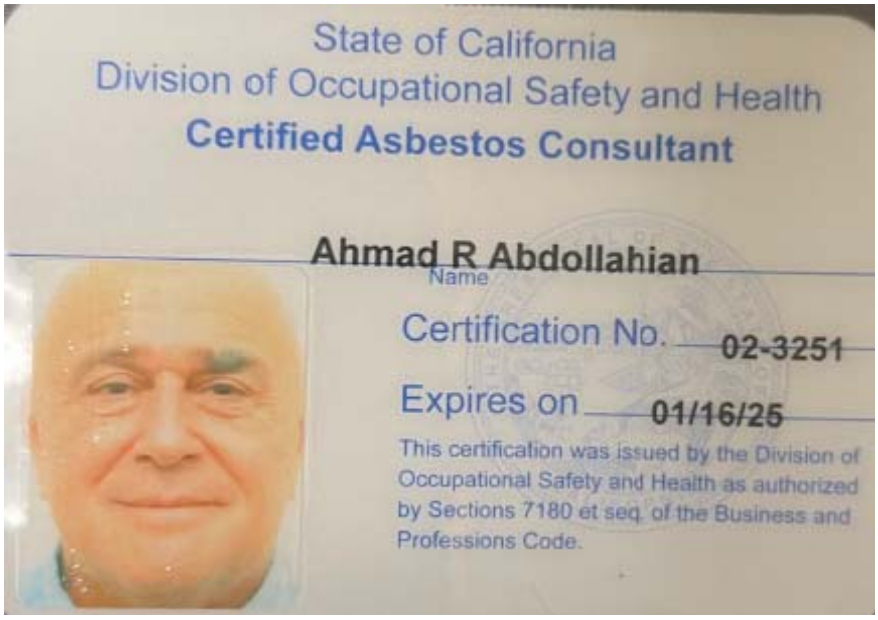

State of California
Division of Occupational Safety and Health
Certified Asbestos Consultant

Name: **Ahmad R Abdollahian**

Certification No. **02-3251**

Expires on **01/16/25**

This certification was issued by the Division of Occupational Safety and Health as authorized by Sections 7180 et seq. of the Business and Professions Code.

State of California
Division of Occupational Safety and Health
Certified Site Surveillance Technician
Eric Bracamontes
Name
Certification No. 17-5970
Expires on 07/18/25
This certification was issued by the Division of Occupational Safety and Health as authorized by Sections 7180 et seq. of the Business and Professions Code.

APPENDIX D: Scope of Work

24-296

Los Angeles Unified School District

Facilities Services Division

Facilities Environmental Technical Unit

Los Angeles Unified School District
FACILITIES SERVICES DIVISION

TASK ORDER – NOTICE TO PROCEED

June 25, 2024

CNS Environmental, Inc.
650 North Rose Drive, #616
Placentia, CA 92870

Task Order #: 22-CNS-416
Laboratory Work Order #: 38050584
Project Work Order #: 38050577

NOTICE TO PROCEED - ASBESTOS AND LEAD-CONTAINING MATERIAL CONSULTING SERVICES

Project Reference:
BASSETT STREET ELEMENTARY
15756 BASSETT ST, LAKE BALBOA, CA 91406
ADA IMPROVEMENTS. (FUNDING LINE: F313167-03-404-99, 0000-8500-14935)

Project/Colin #10373370
Loc. Code: 2323

In accordance with the *AGREEMENT FOR ASBESTOS AND LEAD CONSULTING SERVICES,* agreement number **2290037/4400010136**, you are hereby authorized to proceed, in accordance with your attached proposal with the following work:

☒ **PHASE 1** – Project Assessment and Asbestos and Lead Material Identification - Work to commence within five (5) working days from NTP issuance.
Estimated Date of Completion: 17 Calendar Days from issuance of an NTP

☒ **PHASE 2** – Project Design for Asbestos and Lead Material In-Place Management or Abatement Contract.
Estimated Date of Completion: 7 Calendar Days from completion of phase 1 or from issuance of phase 2 NTP

☐ **PHASE 3** – Project Monitoring of Asbestos and Lead Material In-Place Management or Abatement Contract
Estimated Date of Completion: 45 Days from the issuance of Phase 3 Asbestos/Lead Project Completion Site Acceptance form. Close-Out report must be prepared and submitted no later than forty-five (45) days from the issuance of Phase 3 Asbestos/Lead Project Completion Site Acceptance form.

- All phase 1 & 2 work authorized pursuant to this notice to proceed shall be completed within one (1) year from the date of this letter.
- All Phase 3 work authorized pursuant to this notice to proceed shall be completed within three (3) years from the date of this letter.
- Final invoices shall be received no later than 60 (Sixty) days after the completion of Task Order Services or termination of the contract.
- For all Phase 3 invoices, 10% of invoice amount will be held. This withhold shall be paid upon final Close-Out report approval by FETU.
- Please include a signed copy of this letter and approved cost proposal with all invoices.
- Please submit your invoices via email to fetuinvoices@laschools.org.

Jennie Tran

Jennie Tran Jennie Tran (Jun 25, 2024 09:55 PDT)
Senior Insulator/Asbestos Abatement Worker

TO #	WBS or CC	Program	Proj Type (Fund)	PO #	NTE	NTP Date
22-CNS-416	IO:808000129165			8000000719	$44,099.00	6/25/2024
22-						

Cumulative Not-To-Exceed Total: $44,099.00

CNS Environmental, Inc. agrees to provide the above services according to the dates and fees of this Task Order.

Signed _____ Title _____ Date 7/16/24

REQUEST FOR ASSISTANCE FORM

FACILITIES ENVIRONMENTAL TECHNICAL UNIT

Request for (Please select):

- [x] Environmental Assessment (Phase 1) & Abatement Design (Phase 2)
- [ ] Environmental Project Monitoring (Phase 3)
- [ ] Water Intrusion/Mold Remediation
- [x] Asbestos Assistance
- [ ] Insulation
- [ ] Other:

Section 1 - General Information *(complete this section for all request types):*

Date: 6/18/2024	Requestor Office: Asset Management	
Requestor Name: Saten Mkrtchian	Title: Design Manager	
Phone No: 818-624-4537	Email:cp-saten.mkrtchian@lausd.net	Site Reg/Dist: West
Site Name: Bassett Elementary School		Site Code: 13676

Building Name & Number (e.g., Administrative Building (001CDG)), Specific Location (e.g., Room #1):
Phase I and II assessment for determination for ADA improvement project scope including asbestos and lead in the following buildings: Main bldg, Bldg.A, Bldg. B, Bldg C, Bldg D, Multi-Purpose bldg., Kindergarten Bldg., and Bassett ES exterior site

Section 2 - Project & Funding Information *(provide as much project and/or funding information as possible)*

Official Project Name: Bassett ES - ADA Improvements

Cost Ctr or WBS Project #	Func. Area	GL Acct	Colin Project #	Funding Source
F--313167-03-404-99	0000-8500-14935	580001	10373370	Measure-R

Section 3 - Phase 1 & 2 Request Information* *(Note: Failure to attach a scope or drawings may delay assessment)*

Written scope attached? Yes	Scope % Complete: 100 %	DSA drawings attached? No	Drawing % Complete: 100 %
Phase 1 & 2 supplemental form attached? No	Project Pre-Bid Meeting Date: T.B.D		

Note: *Phase 1 & 2 supplemental form MUST be filled out for ALL phase 1 & 2 requests! See page 2 of this form.

Section 4 - Phase 3 Request Information *(Note: You must attach a copy of FETU approved "Request to Advertise" form)*

WO # on RTA:	RTA Approver Name:

Section5 - Water Intrusion/Mold Remediation, Insulation, or Other Request Information

Describe the Problem:

Section 6 - Asbestos Assistance Request Information

Room/Area Requiring Assistance:	
Asbestos Management Plan has been reviewed? No	Work Order #:
Bulk sample has been completed on:	Requesting FETU to sample suspect materials? No
Name Building Material in Question:	Asbestos Present? No
Description of Material(s) to be Abated:	
Quantity of Material to be Abated:	Abatement Type Requested: Removal
Tentative Start Date of Requestor's Project:	Abatement is required for: Demolition

FOR FETU USE ONLY

FETU Received Date:	Senior Assigned:	Date Assigned:
Parent WO #	Ph. 1 & 2 WO #:	Ph. 3 WO #:
Crew I&P WO #:	Crew Removal WO #:	Crew Lab. WO #:
Date Assigned for Samples:	Date Assigned for Abatement:	
Date Requestor Contacted with Bulk Sample Results:	By:	
Date Requestor Notified of Abatement Completion:	By:	

ENVIRONMENTAL ASSESSMENT (PHASE 1) & ABATEMENT DESIGN (PHASE 2) SUPPLEMENTAL FORM

Purpose of Form: This form will assist the Requestor to determine the proper asbestos and lead requirements by identifying the project as a NO, MINIMAL OR MAJOR IMPACT PROJECT. In turn, information the Requestor provides herein will assist FETU to expeditiously process request for no or minimal impact projects that don't necessarily require a Phase 1 Environmental Assessment.

Date: 6/18/2024	**Requestor:** Saten Mkrtchian	**School:** Bassett Elementary School
Official Project Name: Bassett ES - ADA Improvements		

Directions: Based on the project scope of work, please identify if this Project is a No, Minimal or Major Impact Project by checking the corresponding box below. Also, please check the appropriate sub-box(es) under each main category as appropriate and include any other information that substantiates this project, as No, Minimal or Major Impact Project in the COMMENTS section below.

☐ **THIS IS A NO IMPACT PROJECT**

- ☐ This project does not impact any structures/buildings. (*For example, new stand-alone shade structure.)*
- ☐ Materials to be impacted by this project are not coated with paint, varnish, glazing or any other coating, and are not suspect, known or assumed to be asbestos-containing. In addition, this project does not require working in or exposing any ceiling spaces, attics, crawl spaces or other building interstitial areas. *In the COMMENTS section below, identify the material (e.g., unpainted concrete floor, unpainted metal duct, unpainted concrete walls, unpainted brick wall, etc.).*
- ☐ This project includes work in a building(s) but does not impact any coated surfaces or building materials and does not require working in or exposing any ceiling spaces, attics, crawl spaces or other building interstitial areas. *Elaborate in COMMENTS section below. For example, the scope only includes the re-programming of the fire alarm system or only includes new utilities point of connection at existing conduit and pull box at exterior of building.*
- ☐ This project includes excavation.
- ☐ This project does not include excavation.
- ☐ New construction. Construction Date:
- ☐ Other. *Explain in COMMENTS section below.*

☐ **THIS IS A MINIMAL IMPACT PROJECT**

- ☐ This project requires minimal disturbance or removal of building materials and meets the following criteria:
  - Disturbance or removal of building materials, are less or equal to three (3) square feet per impact area.
  - Total quantity of building material impact does not exceed 99 square feet.
  - No ceiling spaces, attics, crawl spaces or other building interstitial areas are required to be worked in or exposed.
- ☐ This project impacts coated surfaces only.
- ☐ This project does not impact coated surfaces.

An example of a project, which may be a minimal impact project, is a fire alarm upgrade project, which only requires coring, installing surface mounted conduits/raceways and replacing existing surface-mounted fire alarm devices.

☐ **THIS IS A MAJOR IMPACT PROJECT**

- ☐ This project requires major impacts to building materials and/or work in ceiling spaces/attics/crawl spaces/other interstitial building areas. Major impacts to building materials are those that are greater than three (3) square feet for any impact area or total quantity of building material to be impacted exceeds 99 square feet total.

☒ **BASED ON THE SCOPE OF WORK, I AM NOT ABLE TO DETERMINE IF THE PROJECT IS A NO, MINIMAL OR MAJOR IMPACT PROJECT**

COMMENTS *(Include supplemental information regarding the scope of this project and/or additional information regarding no, minimal or major impacts to building materials)*

This project upgrades the following facilities to comply with the Americans with Disabilities Act (ADA) and improve program accessibility: This project includes correction, replacement, or installation of one new changing room, one new permanent wheelchair lift, five restroom upgrades, two new concrete ramps, four drinking fountain upgrades, 17 path of travel upgrades, three assembly seating area upgrades, and 69 miscellaneous upgrades.

CAFM SITE ID - 13813
BASSETT EL
(2323)

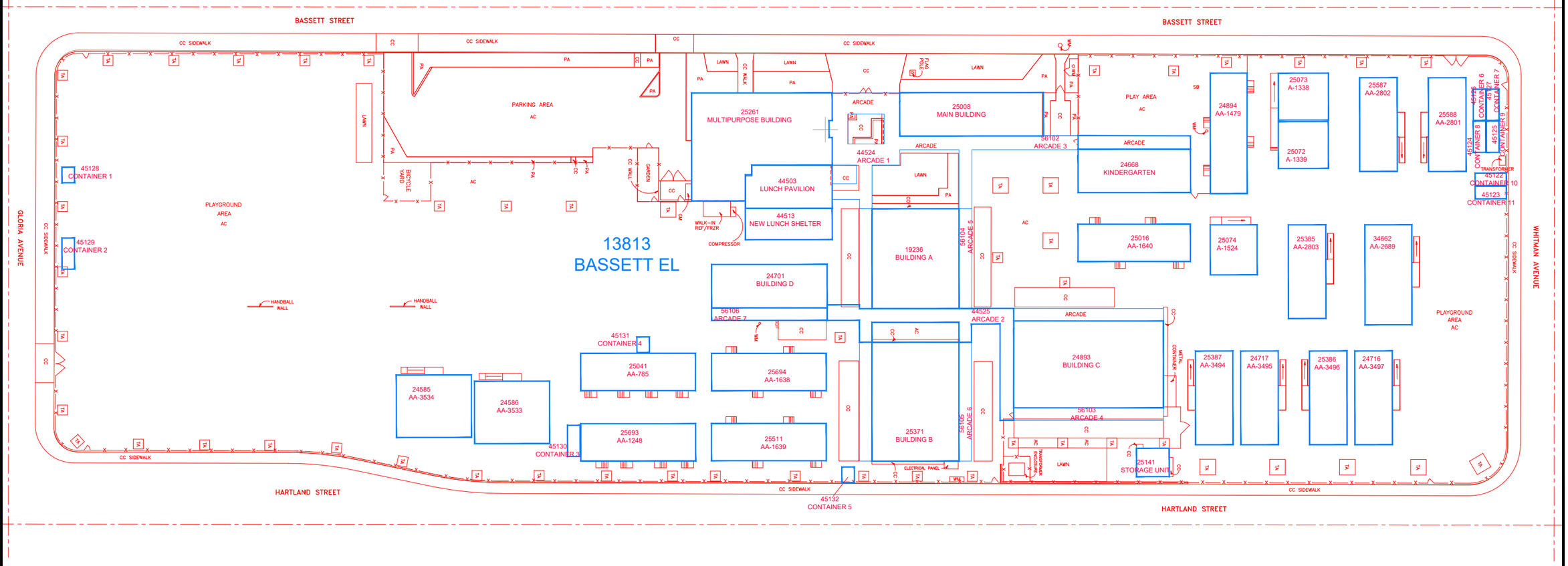

SCALE: NTS

PLOT PLAN

ASSET MANAGEMENT BRANCH
FACILITIES PLANS & RECORDS UNIT
333 S. BEAUDRY AVENUE, 23rd FLR, LOS ANGELES, CA 90017

PLOT PLAN

BASSETT EL
15756 BASSETT ST.
LAKE BALBOA, CA 91406

LEGEND

CENTER LINE	
PROPERTY LINE	
FENCE LINE	
RAILING OR SCREEN	
CHANGE IN GRADE	
ASPHALT CONCRETE	A.C
CEMENT CONCRETE	C.C.
PLANTING AREA	P.A.
TREE AREA	OR T.A.
DECOMPOSED GRANITE	D.G.
GAS METER	G.M.
WATER METER	W.M.
FLAGPOLE	F.P.
AREAWAY	A.W.
STUDENT BODY OWNED	S.B.O.
FIELD LIGHT STANDARD	
SANDBOX	S.B.

DRAWN BY
LP

DATE
07/13/2017

INDEX NO.
1/4

LEGEND:

- PORTABLE
- SANITARY PORTABLE
- SANITARY PERMANENT
- BUNGALOW
- UNCERTIFIED
- PERMANENT BLDGS.
- ANCILLARY

CAFM SITE ID - 13813
BASSETT EL
(2323)

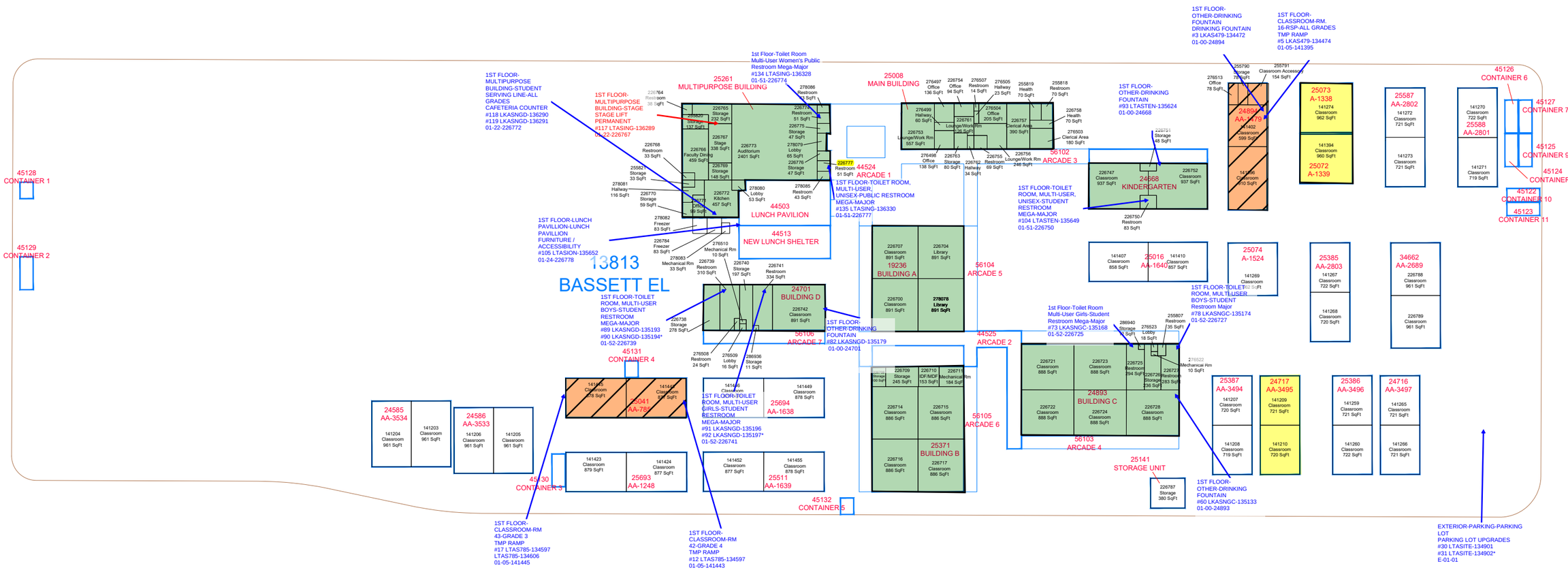

SCALE: NTS

FIRST FLOOR

LOS ANGELES UNIFIED SCHOOL DISTRICT • BOARD OF EDUCATION

ASSET MANAGEMENT BRANCH
FACILITIES PLANS & RECORDS UNIT
333 S. BEAUDRY AVENUE, 23rd FLR, LOS ANGELES, CA 90017

CAFM SPACES

BASSETT EL
15756 BASSETT ST.
LAKE BALBOA, CA 91406

LEGEND

CENTER LINE	
PROPERTY LINE	
FENCE LINE	
RAILING OR SCREEN	
CHANGE IN GRADE	
ASPHALT CONCRETE	A.C.
CEMENT CONCRETE	C.C.
PLANTING AREA	P.A.
TREE AREA	OR T.A.
DECOMPOSED GRANITE	D.G.
GAS METER	G.M.
WATER METER	W.M.
FLAGPOLE	F.P.
AREAWAY	A.W.
STUDENT BODY OWNED	S.B.O.
FIELD LIGHT STANDARD	
SANDBOX	S.B.

DRAWN BY: LP

DATE: 07/13/2017

INDEX NO. 2/4

Bassett Elementary School (2323)
15756 Bassett St., Lake Balboa, CA 91406
EB ~~Vot~~ ADA Improvements Project

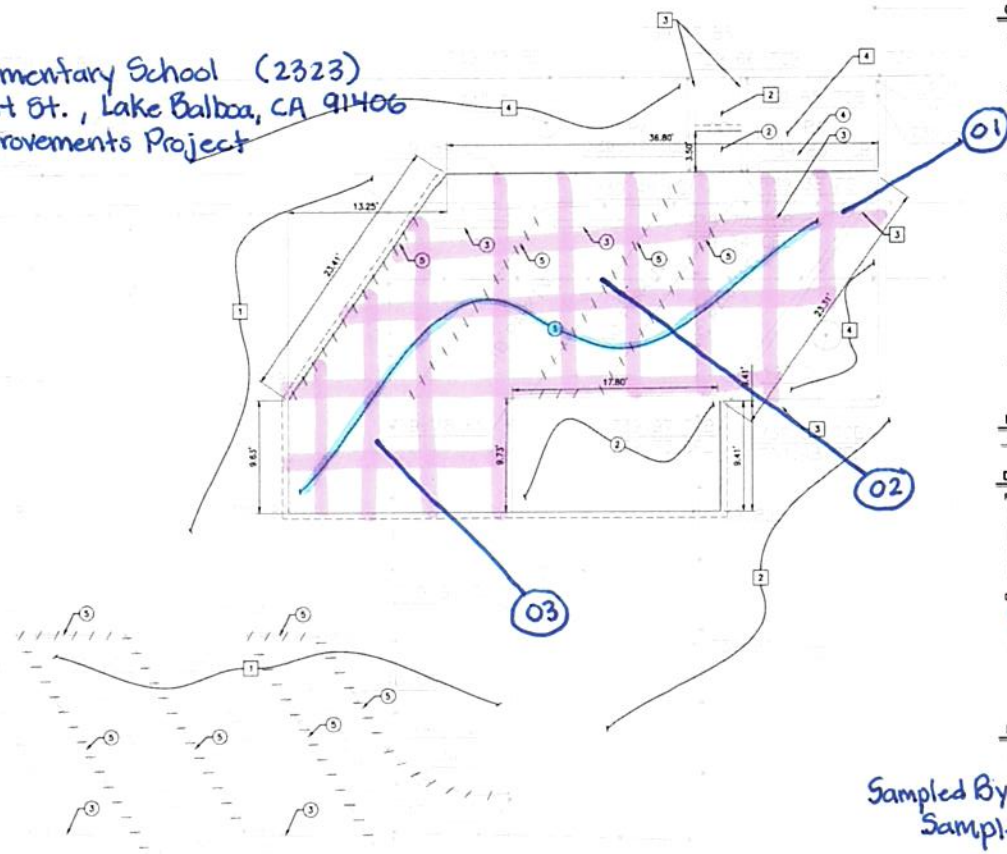

GENERAL DEMOLITION NOTES:

1. CONTRACTOR TO CLEAR PROJECT SITE AREA WITHIN THE CONFINES OF THE DEMOLITION LIMIT LINE. THE CONTRACTOR SHALL DEMOLISH AND REMOVE FROM THE SITE ALL EXISTING UTILITIES, STRUCTURES, PLANTERS, TREES, AND ALL OTHER SITE FEATURES, UNLESS OTHERWISE NOTED ON THE PLAN.
2. REMOVAL OF LANDSCAPING SHALL INCLUDE ROOTS AND ORGANIC MATERIALS.
3. THE CONTRACTOR SHALL BE RESPONSIBLE FOR OBTAINING ANY AND ALL PERMITS AND SHALL PAY ALL FEES NECESSARY FOR ENCROACHMENT, GRADING, DEMOLITION AND DISPOSAL OF SAID MATERIALS AS REQUIRED BY PRIVATE, LOCAL AND STATE JURISDICTIONS.
4. THE CONTRACTOR SHALL BE RESPONSIBLE FOR A SITE INSPECTION TO FULLY ACKNOWLEDGE THE EXTENT OF THE DEMOLITION WORK.
5. THE CONTRACTOR SHALL VERIFY AND LOCATE ALL EXISTING ABOVE AND UNDERGROUND UTILITIES. LOCATIONS SHOWN ON THE PLANS ARE APPROXIMATE AND ARE SHOWN FOR GENERAL INFORMATION ONLY.
6. DAMAGE TO ANY EXISTING UTILITIES AND SERVICES TO REMAIN SHALL BE THE RESPONSIBILITY OF THE CONTRACTOR. CONTRACTOR SHALL REPAIR AND/OR REPLACE IN KIND.
7. EROSION CONTROL MEASURES SHALL BE IMPLEMENTED TO PREVENT DEBRIS AND UNSUITABLE MATERIALS FROM ENTERING STORM DRAINS, SANITARY SEWERS AND STREETS.
8. DUST CONTROL SHALL BE IMPLEMENTED DURING DEMOLITION.
9. DEMOLITION IS LIMITED TO WITHIN DEMOLITION LIMIT LINE UNLESS NOTED OTHERWISE.
10. THE CONTRACTOR SHALL VERIFY THE LOCATION AND QUANTITY OF EXISTING SURFACE STRUCTURES AND SHALL BE SOLELY RESPONSIBLE FOR ANY UNIDENTIFIED UTILITIES, IMPROVEMENTS, TREES, ETC. TO BE DEMOLISHED AND REMOVED WITHIN THE DEMOLITION LIMIT LINE, INCLUDING APPURTENANT FOUNDATIONS OR SUPPORTS.
11. DEMOLITION CALLOUTS IN THIS SECTION ARE REPRESENTATIVE OF WHAT IS TO BE DONE, NOT AN ITEMIZED ACCOUNTING FOR EACH PIPE, CATCH BASIN, MANHOLE, VAULT, ETC. THAT IS TO BE DEMOLISHED, REMOVED AND DISPOSED OF.

LEGEND:

SAWCUT AND JOIN

DEMOLITION NOTES:

PROTECT-IN-PLACE

1. PROTECT-IN-PLACE EXISTING ASPHALT PAVEMENT.
2. PROTECT-IN-PLACE EXISTING CONCRETE PAVEMENT.
3. PROTECT-IN-PLACE EXISTING CURB.
4. PROTECT-IN-PLACE EXISTING LANDSCAPE.

DEMOLISH & REMOVE

1. DEMOLISH & REMOVE EXISTING ASPHALT PAVEMENT.
2. DEMOLISH & REMOVE EXISTING CONCRETE PAVEMENT.
3. DEMOLISH & REMOVE EXISTING WHEEL STOP.
4. DEMOLISH & REMOVE EXISTING STEEL SIGN POST AND CONCRETE FOOTING.
5. REMOVE EXISTING PARKING STRIPING. REFER TO ARCHITECTURAL SHEETS A1.70 & A1.71 FOR PARKING STRIPING DETAILS.

NOTES:

1. REFER TO ARCHITECTURAL SHEET A1.70 FOR ADDITIONAL INFORMATION.

Sampled By: CNS Eric Bracamontes
Sample Date: 07-12-2024

ARCHITECTUAL BARRIER LIST:
#30-LAASITE-134901

PARKING LOT DEMOLITION PLAN
SCALE: 1" = 5'

Sample Material:
- Asphalt Paving (CORE)
Sample #: 01-03
892 S.f

N
0 2.5' 5'
SCALE: 1"=5'

N

Grounds
(2323-G)
AREA "A"
North Parking Lot
(N/E area)

DIVISION OF THE STATE ARCHITECT

DSA APP # 03-XXXXXX

LOS ANGELES UNIFIED SCHOOL DISTRICT

ASSET MANAGEMENT
FACILITIES SERVICES DIVISION
333 S. BEAUDRY AVENUE, 23RD FLOOR
LOS ANGELES, CALIFORNIA 90017

PROJECT TITLE AND SCHOOL LOCATION

BASSETT STREET
ELEMENTARY SCHOOL
15756 BASSETT ST
LAKE BALBOA, CA 91406

VOLUNTARY BARRIER REMOVAL

COLIN NO:10371927

COMMISSIONED ARCHITECT

Swift Lee Office
543A S. Raymond Ave
Pasadena, CA 91105
T. 323.257.8200
www.swiftleeoffice.com

CONSULTANT

kpff
700 South Flower Street
Suite 2100
Los Angeles, CA 90017
O: 213.418.0201
www.kpff.com

STAMPS/SEALS

50% CD	12.18.23
100% CD PROGRESS SET	04.02.24
100% CD	06.03.24

SHEET TITLE

PARKING LOT
DEMOLITION PLAN

PROJECT NO.: PROJECT ARCH
DRAWN: CHECKED:
SHEET NUMBER

C1.10

DATE: SHEET OF

P:\2023\2023345 LAUSD Bassett ES - ADA Upgrades & CAD Drawings\2023345-C1-1100-CD-PV.dwg, Jun 03, 2024 - 10:05am

Grounds
(2323-G)
AREA "B"
(Patch #1)

Bassett Elementary School (2323)
15756 Bassett St., Lake Balboa, CA 91406
ADA Improvements Project
Sampled By: CNS Eric Bracamontes
Sample Date: 07-12-2024

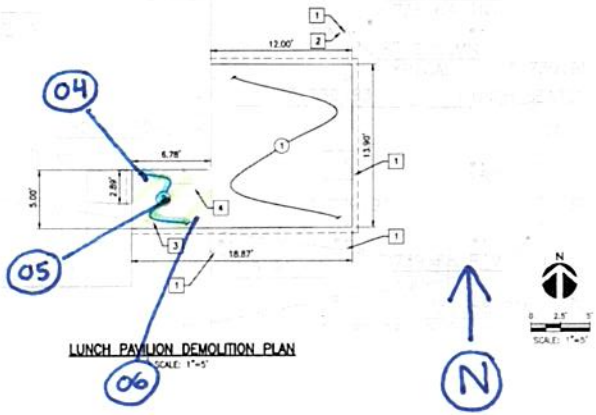

ARCHITECTURAL BARRIER LIST
#118-LTASNG-136290
#119-LATSNG-136291

LUNCH PAVILION DEMOLITION PLAN
SCALE: 1"=5'

GENERAL DEMOLITION NOTES:

1. CONTRACTOR TO CLEAR PROJECT SITE AREA WITHIN THE CONFINES OF THE DEMOLITION LIMIT LINE. THE CONTRACTOR SHALL DEMOLISH AND REMOVE FROM THE SITE ALL EXISTING UTILITIES, STRUCTURES, PLANTERS, TREES, AND ALL OTHER SITE FEATURES, UNLESS OTHERWISE NOTED ON THE PLAN.
2. REMOVAL OF LANDSCAPING SHALL INCLUDE ROOTS AND ORGANIC MATERIALS.
3. THE CONTRACTOR SHALL BE RESPONSIBLE FOR OBTAINING ANY AND ALL PERMITS AND SHALL PAY ALL FEES NECESSARY FOR ENCROACHMENT, GRADING, DEMOLITION AND DISPOSAL OF SAID MATERIALS AS REQUIRED BY PRIVATE, LOCAL AND STATE JURISDICTIONS.
4. THE CONTRACTOR SHALL BE RESPONSIBLE FOR A SITE INSPECTION TO FULLY ACKNOWLEDGE THE EXTENT OF THE DEMOLITION WORK.
5. THE CONTRACTOR SHALL VERIFY AND LOCATE ALL EXISTING ABOVE AND UNDERGROUND UTILITIES. LOCATIONS SHOWN ON THE PLANS ARE APPROXIMATE AND ARE SHOWN FOR GENERAL INFORMATION ONLY.
6. DAMAGE TO ANY EXISTING UTILITIES AND SERVICES TO REMAIN SHALL BE THE RESPONSIBILITY OF THE CONTRACTOR. CONTRACTOR SHALL REPAIR AND/OR REPLACE IN KIND.
7. EROSION CONTROL MEASURES SHALL BE IMPLEMENTED TO PREVENT DEBRIS AND UNSUITABLE MATERIALS FROM ENTERING STORM DRAINS, SANITARY SEWERS AND STREETS.
8. DUST CONTROL SHALL BE IMPLEMENTED DURING DEMOLITION.
9. DEMOLITION IS LIMITED TO WITHIN DEMOLITION LIMIT LINE UNLESS NOTED OTHERWISE.
10. THE CONTRACTOR SHALL VERIFY THE LOCATION AND QUANTITY OF EXISTING SURFACE STRUCTURES AND SHALL BE SOLELY RESPONSIBLE FOR ANY UNIDENTIFIED UTILITIES, IMPROVEMENTS, TREES, ETC. TO BE DEMOLISHED AND REMOVED WITHIN THE DEMOLITION LIMIT LINE, INCLUDING APPURTENANT FOUNDATIONS OR SUPPORTS.
11. DEMOLITION CALLOUTS IN THIS SECTION ARE REPRESENTATIVE OF WHAT IS TO BE DONE, NOT AN ITEMIZED ACCOUNTING FOR EACH PIPE, CATCH BASIN, MANHOLE, VAULT, ETC. THAT IS TO BE DEMOLISHED, REMOVED AND DISPOSED OF.

LEGEND:

SAWCUT AND JOIN

EXISTING FOUNDATION

DEMOLITION NOTES:

PROTECT-IN-PLACE OR PROTECT AND ADJUST

1. PROTECT-IN-PLACE EXISTING COLUMN PER DETAIL 8, SHEET C5.00.
2. PROTECT AND ADJUST EXISTING ROOF DRAIN PER DETAIL 1, SHEET C5.01.
3. PROTECT-IN-PLACE EXISTING STORM DRAIN LINE.
4. PROTECT-IN-PLACE EXISTING ELECTRICAL GROUND BOX. ADJUST TO GRADE.

DEMOLISH & REMOVE

1. DEMOLISH & REMOVE EXISTING CONCRETE PAVEMENT.
2. DEMOLISH & REMOVE EXISTING ASPHALT PAVEMENT.

NOTES

1. REFER TO ARCHITECTURAL SHEET A3.40 FOR ADDITIONAL INFORMATION.

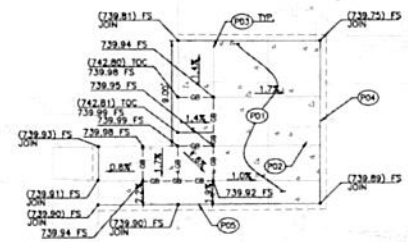

ARCHITECTURAL BARRIER LIST
#118-LTASNG-136290
#119-LATSNG-136291

LUNCH PAVILION GRADING & PAVING PLAN
SCALE: 1"=5'

PAVING CONSTRUCTION NOTES

- P01 CONCRETE WALK PER DETAIL 2, SHEET C5.00.
- P02 CONCRETE PAVEMENT REPLACEMENT AROUND EXISTING COLUMN PER DETAIL 8, SHEET C5.00.
- P03 CONTROL JOINT PER DETAIL 7, SHEET C5.01.
- P04 CONCRETE PAVEMENT CONNECTION TO EXISTING CONCRETE PAVEMENT PER DETAIL 5, SHEET C5.01.
- P05 CONCRETE PAVEMENT CONNECTION TO EXISTING ASPHALT PAVEMENT PER DETAIL 6, SHEET C5.01.

LEGEND

SAWCUT AND JOIN

CONCRETE PAVING
(REFER TO SHEET C5.00 FOR DETAILS)

EXISTING FOUNDATION

NOTE TO CONTRACTOR/CONSTRUCTION SURVEYOR:
CONSTRUCTION STAKING FOR IMPROVEMENTS SHOWN ON THESE PLANS SHALL BE PERFORMED BY A LICENSED LAND SURVEYOR. CONSTRUCTION STAKING SURVEYOR SHALL BE RESPONSIBLE FOR COORDINATION OF THESE PLANS WITH SOURCE DRAWINGS PREPARED BY ARCHITECT, LANDSCAPE ARCHITECT, STRUCTURAL ENGINEER, MEP CONSULTANT AND ANY OTHER DISCIPLINE PRIOR TO START OF STAKING AND CONSTRUCTION. ANY DISCREPANCIES THAT OCCUR SHALL BE BROUGHT TO THE ATTENTION OF THE ARCHITECT PRIOR TO THE START OF CONSTRUCTION SO THAT A CLARIFICATION CAN BE ISSUED.

NOTES

1. CONTRACTOR TO VERIFY LIMITS OF HARDSCAPE REPLACEMENT WITH EXISTING CONSTRUCTION JOINTS. CONTRACTOR TO NOTIFY ENGINEER IF DISCREPANCIES ARE FOUND.
2. REFER TO ARCHITECTURAL SHEET A3.41 FOR ADDITIONAL INFORMATION.

Sample Material:

- Asphalt Paving-Patch (CORE)
  Sample #: 04-06
  34 s.f

DIVISION OF THE STATE ARCHITECT

DSA APP # 03-XXXXXX

LOS ANGELES UNIFIED SCHOOL DISTRICT

ASSET MANAGEMENT
FACILITIES SERVICES DIVISION
333 S. BEAUDRY AVENUE, 23RD FLOOR
LOS ANGELES, CALIFORNIA 90017

PROJECT TITLE AND SCHOOL LOCATION

BASSETT STREET
ELEMENTARY SCHOOL
15756 BASSETT ST
LAKE BALBOA, CA 91406

VOLUNTARY BARRIER REMOVAL

COLIN NO: 10371927

COMMISSIONED ARCHITECT

Swift Lee Office
543A S. Raymond Ave
Pasadena, CA 91105
T. 323.257.8200
www.swiftleeoffice.com

CONSULTANT

kpff
700 South Flower Street
Suite 2100
Los Angeles, CA 90017
O: 213.418.0201
www.kpff.com

STAMPS/SEALS

50% CD	12.18.23
100% CD PROGRESS SET	04.02.24
100% CD	06.03.24

SHEET TITLE

LUNCH PAVILION DEMOLITION, GRADING AND PAVING PLAN

PROJECT NO.: | PROJECT MGR.:
DRAWN: | CHECKED:

SHEET NUMBER

C1.12

DATE: | SHEET OF:

P:\2023\2303545 LAUSD Bassett ES - ADA Upgrades & CAD Drawings\2303545-C1.12(G)-GP-PV.dwg, Jun 03, 2024 - 10:05am

Bassett Elementary School (2323)
15756 Bassett St., Lake Balboa, CA 91406
ADA Improvements Project
Sampled By: CNS Eric Bracamontes
Sample Date: 07-12-2024

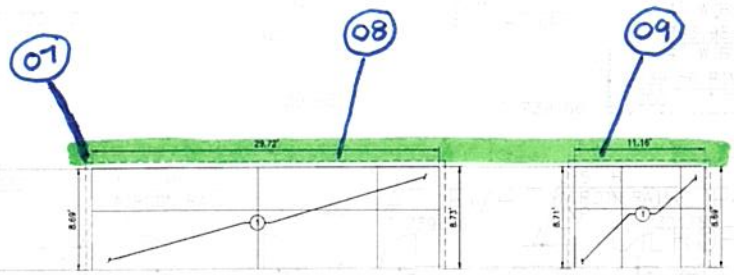

Grounds
(2323-G)
AREA "C"
(Kindergarden)
play area
South area

N

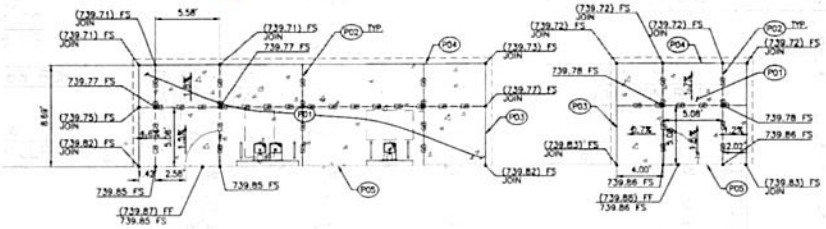

Sample Material:

- Asphalt Paving (CORE)
  Sample #: 07-09
  ≈ 180 S.f.

N

0 2.5' 5'
SCALE: 1"=5'

ARCHITECTUAL BARRIER LIST:
#97-LTASTEN-135632
#102-LTASTEN-135644

KINDERGARTEN BUILDING DEMOLITION PLAN
SCALE: 1"=5'

GENERAL DEMOLITION NOTES:

1. CONTRACTOR TO CLEAR PROJECT SITE AREA WITHIN THE CONFINES OF THE DEMOLITION LIMIT LINE. THE CONTRACTOR SHALL DEMOLISH AND REMOVE FROM THE SITE ALL EXISTING UTILITIES, STRUCTURES, PLANTERS, TREES, AND ALL OTHER SITE FEATURES, UNLESS OTHERWISE NOTED ON THE PLAN.
2. REMOVAL OF LANDSCAPING SHALL INCLUDE ROOTS AND ORGANIC MATERIALS.
3. THE CONTRACTOR SHALL BE RESPONSIBLE FOR OBTAINING ANY AND ALL PERMITS AND SHALL PAY ALL FEES NECESSARY FOR ENCROACHMENT, GRADING, DEMOLITION AND DISPOSAL OF SAID MATERIALS AS REQUIRED BY PRIVATE, LOCAL AND STATE JURISDICTIONS.
4. THE CONTRACTOR SHALL BE RESPONSIBLE FOR A SITE INSPECTION TO FULLY ACKNOWLEDGE THE EXTENT OF THE DEMOLITION WORK.
5. THE CONTRACTOR SHALL VERIFY AND LOCATE ALL EXISTING ABOVE AND UNDERGROUND UTILITIES. LOCATIONS SHOWN ON THE PLANS ARE APPROXIMATE AND ARE SHOWN FOR GENERAL INFORMATION ONLY.
6. DAMAGE TO ANY EXISTING UTILITIES AND SERVICES TO REMAIN SHALL BE THE RESPONSIBILITY OF THE CONTRACTOR. CONTRACTOR SHALL REPAIR AND/OR REPLACE IN KIND.
7. EROSION CONTROL MEASURES SHALL BE IMPLEMENTED TO PREVENT DEBRIS AND UNSUITABLE MATERIALS FROM ENTERING STORM DRAINS, SANITARY SEWERS AND STREETS.
8. DUST CONTROL SHALL BE IMPLEMENTED DURING DEMOLITION.
9. DEMOLITION IS LIMITED TO WITHIN DEMOLITION LIMIT LINE UNLESS NOTED OTHERWISE.
10. THE CONTRACTOR SHALL VERIFY THE LOCATION AND QUANTITY OF EXISTING SURFACE STRUCTURES AND SHALL BE SOLELY RESPONSIBLE FOR ANY UNIDENTIFIED UTILITIES, IMPROVEMENTS, TREES, ETC. TO BE DEMOLISHED AND REMOVED WITHIN THE DEMOLITION LIMIT LINE, INCLUDING APPURTENANT FOUNDATIONS OR SUPPORTS.
11. DEMOLITION CALLOUTS IN THIS SECTION ARE REPRESENTATIVE OF WHAT IS TO BE DONE, NOT AN ITEMIZED ACCOUNTING FOR EACH PIPE, CATCH BASIN, MANHOLE, VAULT, ETC. THAT IS TO BE DEMOLISHED, REMOVED AND DISPOSED OF.

LEGEND

SAWCUT AND JOIN

DEMOLITION NOTES:

DEMOLISH & REMOVE

(1) DEMOLISH & REMOVE EXISTING CONCRETE PAVEMENT.

NOTES

1. REFER TO ARCHITECTURAL SHEET A2.10 FOR ADDITIONAL INFORMATION.

ARCHITECTUAL BARRIER LIST:
#97-LTASTEN-135632
#102-LTASTEN-135644

KINDERGARTEN BUILDING GRADING & PAVING PLAN
SCALE: 1"=5'

PAVING CONSTRUCTION NOTES

(P01) CONCRETE WALK PER DETAIL 2, SHEET C5.00.

(P02) CONTROL JOINT PER DETAIL 7, SHEET C5.01.

(P03) CONCRETE PAVEMENT CONNECTON TO EXISTING CONCRETE PAVEMENT PER DETAIL 5, SHEET C5.01.

(P04) CONCRETE PAVEMENT CONNECTON TO EXISTING ASPHALT PAVEMENT PER DETAIL 6, SHEET C5.01.

(P05) CONCRETE PAVEMENT AGAINST EXISTING WALL PER DETAIL 2, SHEET C5.01.

LEGEND

SAWCUT AND JOIN

GRADE BREAK

CONCRETE PAVING
(REFER TO SHEET C5.00 FOR DETAILS)

NOTE TO CONTRACTOR/CONSTRUCTION SURVEYOR:
CONSTRUCTION STAKING FOR IMPROVEMENTS SHOWN ON THESE PLANS SHALL BE PERFORMED BY A LICENSED LAND SURVEYOR. CONSTRUCTION STAKING SURVEYOR SHALL BE RESPONSIBLE FOR COORDINATION OF THESE PLANS WITH SOURCE DRAWINGS PREPARED BY ARCHITECT, LANDSCAPE ARCHITECT, STRUCTURAL ENGINEER, MEP CONSULTANT AND ANY OTHER DISCIPLINE. PRIOR TO START OF STAKING AND CONSTRUCTION, ANY DISCREPANCIES THAT OCCUR SHALL BE BROUGHT TO THE ATTENTION OF THE ARCHITECT PRIOR TO THE START OF CONSTRUCTION SO THAT A CLARIFICATION CAN BE ISSUED.

NOTES

1. CONTRACTOR TO VERIFY LIMITS OF HARDSCAPE REPLACEMENT ALIGN WITH EXISTING CONSTRUCTION JOINTS. CONTRACTOR TO NOTIFY ENGINEER IF DISCREPANCIES ARE FOUND.
2. REFER TO ARCHITECTURAL SHEET A2.11 FOR ADDITIONAL INFORMATION.

DIVISION OF THE STATE ARCHITECT

DSA APP # 03-XXXXXX

LOS ANGELES UNIFIED SCHOOL DISTRICT

ASSET MANAGEMENT
FACILITIES SERVICES DIVISION
333 S. BEAUDRY AVENUE, 23RD FLOOR
LOS ANGELES, CALIFORNIA 90017

PROJECT TITLE AND SCHOOL LOCATION

BASSETT STREET
ELEMENTARY SCHOOL
15756 BASSETT ST
LAKE BALBOA, CA 91406

VOLUNTARY BARRIER REMOVAL

COLIN NO: 10371927

COMMISSIONED ARCHITECT

Swift Lee Office
543A S. Raymond Ave.
Pasadena, CA 91105
T. 323 257 8200
www.swiftleeoffice.com

CONSULTANT

kpff
700 South Flower Street
Suite 2100
Los Angeles, CA 90017
O: 213.418.0201
www.kpff.com

STAMPS/SEALS

△ 50% CD	12.18.23
△ 100% CD PROGRESS SET	04.02.24
△ 100% CD	06.03.24
△	

SHEET TITLE

KINDERGARTEN BUILDING DEMOLITION, GRADING AND PAVING PLAN

PROJECT NO.: PROJECT ARCH.
DRAWN: CHECKED:

SHEET NUMBER

C1.15

DATE: SHEET OF

Bassett Elementary School (2323)
15756 Bassett St., Lake Balboa, CA 91406
ADA Improvements Project
Sampled By: CNS Eric Bracamontes
Sample Date: 07-12-2024

Grounds
(2323-G)
AREA "D" w/
Patch #2 & #3

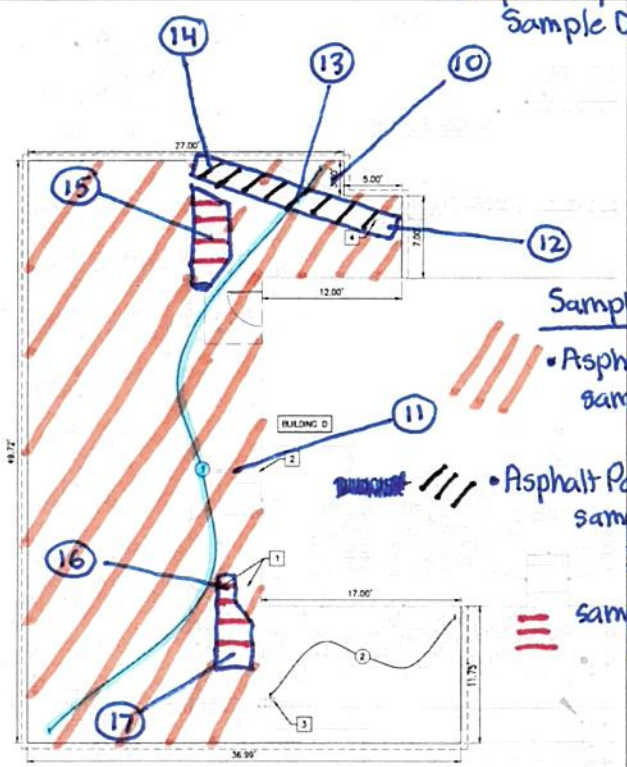

Sample Material:

- Asphalt Paving (CORE)
  sample #: 10, 11
  1,045 s.f
- Asphalt Paving - Patch (CORE)
  sample #: 12-14
  30 s.f.

= sample #: 15-17
55 s.f.

ARCHITECTUAL BARRIER LIST:
#82-LKASNCD-135179
#83-LKASNCD-135180

BUILDING D WEST EXTERIOR DEMOLITION PLAN
SCALE: 1"=5'

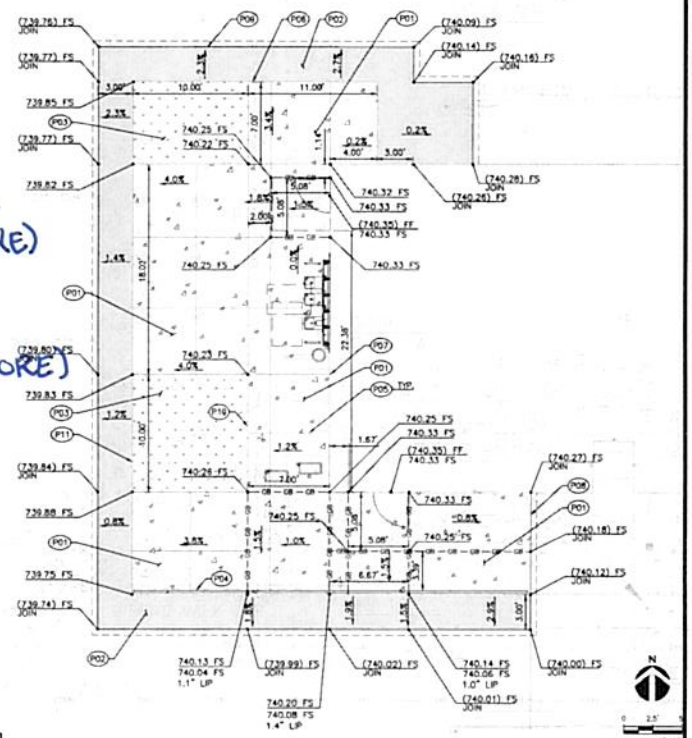

ARCHITECTUAL BARRIER LIST:
#82-LKASNCD-135179
#83-LKASNCD-135180

BUILDING D WEST EXTERIOR GRADING & PAVING PLAN
SCALE: 1"=5'

GENERAL DEMOLITION NOTES:

1. CONTRACTOR TO CLEAR PROJECT SITE AREA WITHIN THE CONFINES OF THE DEMOLITION LIMIT LINE. THE CONTRACTOR SHALL DEMOLISH AND REMOVE FROM THE SITE ALL EXISTING UTILITIES, STRUCTURES, PLANTERS, TREES, AND ALL OTHER SITE FEATURES, UNLESS OTHERWISE NOTED ON THE PLAN.
2. REMOVAL OF LANDSCAPING SHALL INCLUDE ROOTS AND ORGANIC MATERIALS.
3. THE CONTRACTOR SHALL BE RESPONSIBLE FOR OBTAINING ANY AND ALL PERMITS AND SHALL PAY ALL FEES NECESSARY FOR ENCROACHMENT, GRADING, DEMOLITION AND DISPOSAL OF SAID MATERIALS AS REQUIRED BY PRIVATE, LOCAL AND STATE JURISDICTIONS.
4. THE CONTRACTOR SHALL BE RESPONSIBLE FOR A SITE INSPECTION TO FULLY ACKNOWLEDGE THE EXTENT OF THE DEMOLITION WORK.
5. THE CONTRACTOR SHALL VERIFY AND LOCATE ALL EXISTING ABOVE AND UNDERGROUND UTILITIES. LOCATIONS SHOWN ON THE PLANS ARE APPROXIMATE AND ARE SHOWN FOR GENERAL INFORMATION ONLY.
6. DAMAGE TO ANY EXISTING UTILITIES AND SERVICES TO REMAIN SHALL BE THE RESPONSIBILITY OF THE CONTRACTOR. CONTRACTOR SHALL REPAIR AND/OR REPLACE IN KIND.
7. EROSION CONTROL MEASURES SHALL BE IMPLEMENTED TO PREVENT DEBRIS AND UNSUITABLE MATERIALS FROM ENTERING STORM DRAINS, SANITARY SEWERS AND STREETS.
8. DUST CONTROL SHALL BE IMPLEMENTED DURING DEMOLITION.
9. DEMOLITION IS LIMITED TO WITHIN DEMOLITION LIMIT LINE UNLESS NOTED OTHERWISE.
10. THE CONTRACTOR SHALL VERIFY THE LOCATION AND QUANTITY OF EXISTING SURFACE STRUCTURES AND SHALL BE SOLELY RESPONSIBLE FOR ANY UNIDENTIFIED UTILITIES, IMPROVEMENTS, TREES, ETC. TO BE DEMOLISHED AND REMOVED WITHIN THE DEMOLITION LIMIT LINE, INCLUDING APPURTENANT FOUNDATIONS OR SUPPORTS.
11. DEMOLITION CALLOUTS IN THIS SECTION ARE REPRESENTATIVE OF WHAT IS TO BE DONE, NOT AN ITEMIZED ACCOUNTING FOR EACH PIPE, CATCH BASIN, MANHOLE, VAULT, ETC. THAT IS TO BE DEMOLISHED, REMOVED AND DISPOSED OF.

LEGEND:

SAWCUT AND JOIN

DEMOLITION NOTES:

PROTECT-IN-PLACE

1. PROTECT-IN-PLACE EXISTING WATER VALVE BOX. ADJUST TO GRADE.
2. PROTECT-IN-PLACE EXISTING PULL BOX. ADJUST TO GRADE.
3. PROTECT-IN-PLACE EXISTING CHISELED SQUARE BENCHMARK.
4. PROTECT-IN-PLACE EXISTING CLEANOUT. ADJUST TO GRADE.

DEMOLISH & REMOVE

1. DEMOLISH & REMOVE EXISTING ASPHALT PAVEMENT.
2. DEMOLISH & REMOVE EXISTING CONCRETE PAVEMENT.

NOTES

1. REFER TO ARCHITECTURAL SHEET A4.20 FOR ADDITIONAL INFORMATION.

PAVING CONSTRUCTION NOTES

- (P01) CONCRETE WALK PER DETAIL 2, SHEET C5.00.
- (P02) ASPHALT PAVEMENT PER DETAIL 3, SHEET C5.00.
- (P03) LANDSCAPE. REFER TO LANDSCAPE PLANS FOR DETAILS.
- (P04) HANDRAIL PER ARCHITECTURAL PLANS.
- (P05) CONTROL JOINT PER DETAIL 7, SHEET C5.01.
- (P06) CONCRETE PAVEMENT CONNECTION TO EXISTING ASPHALT PAVEMENT PER DETAIL 6, SHEET C5.01.
- (P07) CONCRETE PAVEMENT REPLACEMENT AGAINST EXISTING WALL PER DETAIL 2, SHEET C5.01.
- (P08) CONCRETE PAVEMENT CONNECTION TO EXISTING CONCRETE PAVEMENT PER DETAIL 5, SHEET C5.01.
- (P09) ASPHALT PAVEMENT CONNECTION TO EXISTING ASPHALT PAVEMENT PER DETAIL 8, SHEET C5.01.
- (P10) CONCRETE PAVEMENT CONNECTION TO PLANTER PER DETAIL 10, SHEET C5.01.
- (P11) ASPHALT PAVEMENT CONNECTION TO PLANTER PER DETAIL 1, SHEET C5.02.

LEGEND

SAWCUT AND JOIN
GRADE BREAK
CONCRETE PAVING (REFER TO SHEET C5.00 FOR DETAILS)
ASPHALT PAVING (REFER TO SHEET C5.00 FOR DETAILS)
LANDSCAPE (REFER TO LANDSCAPE PLANS FOR DETAILS)

NOTES

1. CONTRACTOR TO VERIFY LIMITS OF HARDSCAPE REPLACEMENT. MATCH EXISTING CONSTRUCTION JOINTS. CONTRACTOR TO NOTIFY ENGINEER IF DISCREPANCIES ARE FOUND.
2. REFER TO ARCHITECTURAL SHEET A4.21 FOR ADDITIONAL INFORMATION.

NOTE TO CONTRACTOR/CONSTRUCTION SURVEYOR:
CONSTRUCTION STAKING FOR IMPROVEMENTS SHOWN ON THESE PLANS SHALL BE PERFORMED BY A LICENSED LAND SURVEYOR. CONSTRUCTION STAKING SURVEYOR SHALL BE RESPONSIBLE FOR COORDINATION OF THESE PLANS WITH SOURCE DRAWINGS PREPARED BY ARCHITECT, LANDSCAPE ARCHITECT, STRUCTURAL ENGINEER, MEP CONSULTANT AND ANY OTHER DISCIPLINE PRIOR TO START OF STAKING AND CONSTRUCTION. ANY DISCREPANCIES THAT OCCUR SHALL BE BROUGHT TO THE ATTENTION OF THE ARCHITECT PRIOR TO THE START OF CONSTRUCTION SO THAT A CLARIFICATION CAN BE ISSUED.

DIVISION OF THE STATE ARCHITECT

DSA APP # 03-XXXXXX

LOS ANGELES UNIFIED SCHOOL DISTRICT

ASSET MANAGEMENT
FACILITIES SERVICES DIVISION
333 S. BEAUDRY AVENUE, 23RD FLOOR
LOS ANGELES, CALIFORNIA 90017

PROJECT TITLE AND SCHOOL LOCATION

BASSETT STREET
ELEMENTARY SCHOOL
15756 BASSETT ST
LAKE BALBOA, CA 91406

VOLUNTARY BARRIER REMOVAL

COLIN NO: 10371927

COMMISSIONED ARCHITECT

Swift Lee Office
543A S. Raymond Ave
Pasadena, CA 91105
T. 323.257.8200
www.swiftleeoffice.com

CONSULTANT

kpff
700 South Flower Street
Suite 2100
Los Angeles, CA 90017
O: 213.418.0201
www.kpff.com

STAMPS/SEALS

△ 50% CD	12.18.23
△ 100% CD PROGRESS SET	04.02.24
△ 100% CD	06.03.24
△	

SHEET TITLE:

BUILDING D WEST EXTERIOR DEMOLITION, GRADING AND PAVING PLAN

PROJECT NO.: | PROJECT ARCH.
DRAWN: | CHECKED:

SHEET NUMBER

C1.16

DATE: | SHEET OF:

P:\2023\2300349 LAUSD Bassett ES- ADA Upgrades & CAD\Drawing\2300349-C1.16DD-GP-PV.dwg Jun 03, 2024 - 10:01am

Grounds
(2323-G)
AREA "E"

Bassett Elementary School (2323)
15756 Bassett St., Lake Balboa, CA 91406
ADA Improvements Project
Sampled By: CNS Eric Bracamontes
Sample Date: 07-12-2024

Sample Material:

5 sf • Asphalt Paving (CORE)
Sample #: 18 - 20

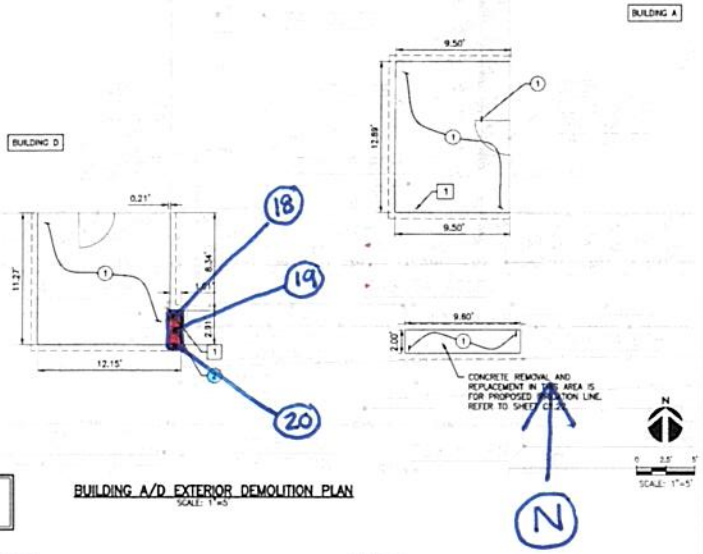

ARCHITECTUAL BARRIER LIST:
#87-LKASNCD-135188
#48-LKASNGA-135100

BUILDING A/D EXTERIOR DEMOLITION PLAN
SCALE: 1"=5'

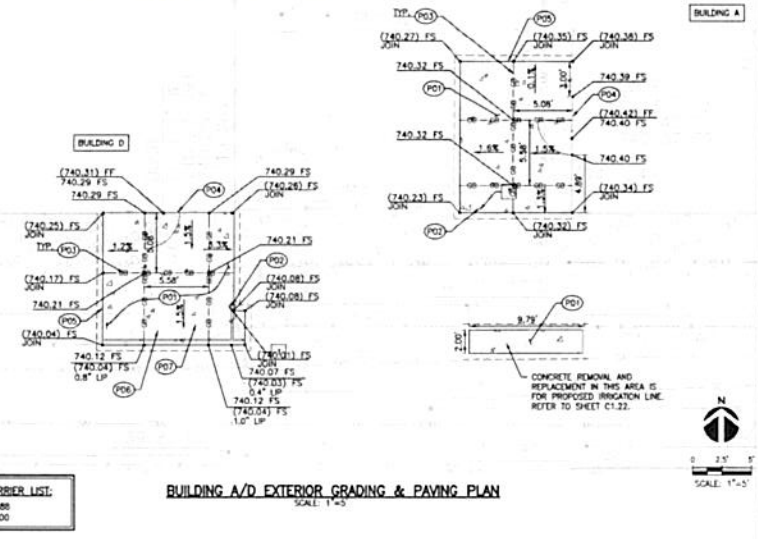

ARCHITECTUAL BARRIER LIST:
#87-LKASNCD-135188
#48-LKASNGA-135100

BUILDING A/D EXTERIOR GRADING & PAVING PLAN
SCALE: 1"=5'

GENERAL DEMOLITION NOTES:

1. CONTRACTOR TO CLEAR PROJECT SITE AREA WITHIN THE CONFINES OF THE DEMOLITION LIMIT LINE. THE CONTRACTOR SHALL DEMOLISH AND REMOVE FROM THE SITE ALL EXISTING UTILITIES, STRUCTURES, PLANTERS, TREES, AND ALL OTHER SITE FEATURES, UNLESS OTHERWISE NOTED ON THE PLAN.
2. REMOVAL OF LANDSCAPING SHALL INCLUDE ROOTS AND ORGANIC MATERIALS.
3. THE CONTRACTOR SHALL BE RESPONSIBLE FOR OBTAINING ANY AND ALL PERMITS AND SHALL PAY ALL FEES NECESSARY FOR ENCROACHMENT, GRADING, DEMOLITION AND DISPOSAL OF SAID MATERIALS AS REQUIRED BY PRIVATE, LOCAL AND STATE JURISDICTIONS.
4. THE CONTRACTOR SHALL BE RESPONSIBLE FOR A SITE INSPECTION TO FULLY ACKNOWLEDGE THE EXTENT OF THE DEMOLITION WORK.
5. THE CONTRACTOR SHALL VERIFY AND LOCATE ALL EXISTING ABOVE AND UNDERGROUND UTILITIES. LOCATIONS SHOWN ON THE PLANS ARE APPROXIMATE AND ARE SHOWN FOR GENERAL INFORMATION ONLY.
6. DAMAGE TO ANY EXISTING UTILITIES AND SERVICES TO REMAIN SHALL BE THE RESPONSIBILITY OF THE CONTRACTOR. CONTRACTOR SHALL REPAIR AND/OR REPLACE IN KIND.
7. EROSION CONTROL MEASURES SHALL BE IMPLEMENTED TO PREVENT DEBRIS AND UNSUITABLE MATERIALS FROM ENTERING STORM DRAINS, SANITARY SEWERS AND STREETS.
8. DUST CONTROL SHALL BE IMPLEMENTED DURING DEMOLITION.
9. DEMOLITION IS LIMITED TO WITHIN DEMOLITION LIMIT LINE UNLESS NOTED OTHERWISE.
10. THE CONTRACTOR SHALL VERIFY THE LOCATION AND QUANTITY OF EXISTING SURFACE STRUCTURES AND SHALL BE SOLELY RESPONSIBLE FOR ANY UNIDENTIFIED UTILITIES, IMPROVEMENTS, TREES, ETC. TO BE DEMOLISHED AND REMOVED WITHIN THE DEMOLITION LIMIT LINE, INCLUDING APPURTENANT FOUNDATIONS OR SUPPORTS.
11. DEMOLITION CALLOUTS IN THIS SECTION ARE REPRESENTATIVE OF WHAT IS TO BE DONE, NOT AN ITEMIZED ACCOUNTING FOR EACH PIPE, CATCH BASIN, MANHOLE, VAULT, ETC. THAT IS TO BE DEMOLISHED, REMOVED AND DISPOSED OF.

LEGEND:

SAWCUT AND JOIN

EXISTING FOUNDATION

DEMOLITION NOTES:

PROTECT-IN-PLACE

1. PROTECT-IN-PLACE EXISTING COLUMN PER DETAIL 8 ON SHEET C5.00.
2. PROTECT-IN-PLACE EXISTING WATER LINE.
3. PROTECT-IN-PLACE EXISTING COMMUNICATION LINE.

DEMOLISH & REMOVE

1. DEMOLISH & REMOVE EXISTING CONCRETE PAVEMENT.
2. DEMOLISH & REMOVE EXISTING ASPHALT PAVEMENT.

NOTES

1. REFER TO ARCHITECTURAL SHEETS A4.20 AND A8.20 FOR ADDITIONAL INFORMATION.

PAVING CONSTRUCTION NOTES

- (P01) CONCRETE WALK, PER DETAIL 2, SHEET C5.00.
- (P02) CONCRETE PAVEMENT REPLACEMENT AROUND EXISTING COLUMN PER DETAIL 8,SHEET C5.00.
- (P03) CONTROL JOINT PER DETAIL 7, SHEET C5.01.
- (P04) CONCRETE PAVEMENT REPLACEMENT AGAINST EXISTING WALL PER DETAIL 2, SHEET C5.01.
- (P05) CONCRETE PAVEMENT CONNECTION TO EXISTING CONCRETE PAVEMENT PER DETAIL 5, SHEET C5.01.
- (P06) STEEL PIPE GUARDRAIL. REFER TO ARCHITECTURAL SHEET A4.21.
- (P07) 10"Wx6"H CONCRETE CURB. REFER TO ARCHITECTURAL SHEET A4.21.

LEGEND

SAWCUT AND JOIN

GRADE BREAK

CONCRETE PAVING
(REFER TO SHEET C5.00 FOR DETAILS)

EXISTING FOUNDATION

NOTES

1. CONTRACTOR TO VERIFY LIMITS OF HARDSCAPE REPLACEMENT MATCH EXISTING CONSTRUCTION JOINTS. CONTRACTOR TO NOTIFY ENGINEER IF DISCREPANCIES ARE FOUND.
2. REFER TO ARCHITECTURAL SHEETS A4.21 AND A8.21 FOR ADDITIONAL INFORMATION.

NOTE TO CONTRACTOR/CONSTRUCTION SURVEYOR:
CONSTRUCTION STAKING FOR IMPROVEMENTS SHOWN ON THESE PLANS SHALL BE PERFORMED BY A LICENSED LAND SURVEYOR. CONSTRUCTION STAKING SURVEYOR SHALL BE RESPONSIBLE FOR COORDINATION OF THESE PLANS WITH SOURCE DRAWINGS PREPARED BY ARCHITECT, LANDSCAPE ARCHITECT, STRUCTURAL ENGINEER, MEP CONSULTANT AND ANY OTHER DISCIPLINE PRIOR TO START OF STAKING AND CONSTRUCTION. ANY DISCREPANCIES THAT OCCUR SHALL BE BROUGHT TO THE ATTENTION OF THE ARCHITECT PRIOR TO THE START OF CONSTRUCTION SO THAT A CLARIFICATION CAN BE ISSUED.

DIVISION OF THE STATE ARCHITECT

DSA APP # 03-XXXXXX

LOS ANGELES UNIFIED SCHOOL DISTRICT

ASSET MANAGEMENT
FACILITIES SERVICES DIVISION
333 S. BEAUDRY AVENUE, 23RD FLOOR
LOS ANGELES, CALIFORNIA 90017

PROJECT TITLE AND SCHOOL LOCATION

BASSETT STREET
ELEMENTARY SCHOOL
15756 BASSETT ST
LAKE BALBOA, CA 91406

VOLUNTARY BARRIER REMOVAL

COLIN NO: 10371927

COMMISSIONED ARCHITECT

Swift Lee Office
543A S. Raymond Ave.
Pasadena, CA 91105
T. 323.257.8200
www.swiftleeoffice.com

CONSULTANT

kpff
700 South Flower Street
Suite 2100
Los Angeles, CA 90017
O: 213.418.0201
www.kpff.com

STAMPS/SEALS

△ 50% CD	12.18.23
△ 100% CD PROGRESS SET	04.02.24
△ 100% CD	06.03.24
△	

SHEET TITLE

BUILDING A-D
EXTERIOR
DEMOLITION, GRADING
AND PAVING PLAN

PROJECT NO.: | PROJECT ARCH.
DRAWN: | CHECKED:

SHEET NUMBER

C1.17

DATE: | SHEET | OF

P:\2021-210148 LAUSD Bassett ES - ADA Upgrade\5 CAD\Sheets\210148-C1.17CD-GP.PV Aug Jun 03, 2024 - 10:01am

Sample Material:

250sf • Asphalt Paving (CORE)
Sample #: 21-23

235sf • Asphalt Paving - Patch (CORE)
Sample #: 24-26

Grounds
(2323-G)
AREA "F" w/
Patch #4

Bassett Elementary School (2323)
15756 Bassett St., Lake Balboa, CA 91406
ADA Improvements Project
Sampled By: CNS Eric Bracamontes
Sample Date: 07-12-2024

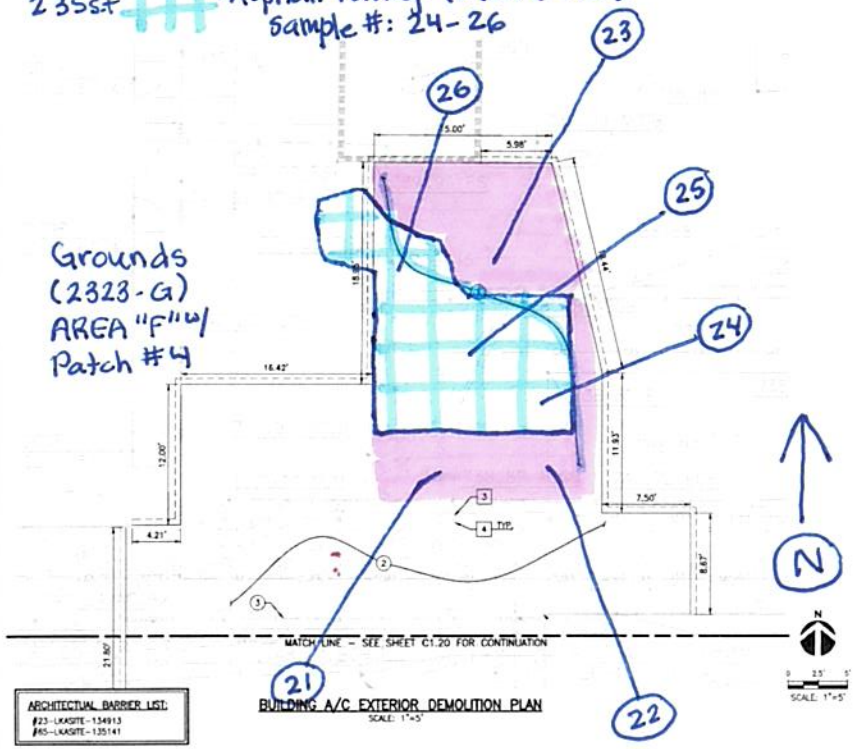

ARCHITECTUAL BARRIER LIST:
#23-LKASITE-134913
#65-LKASITE-135141

BUILDING A/C EXTERIOR DEMOLITION PLAN
SCALE: 1"=5'

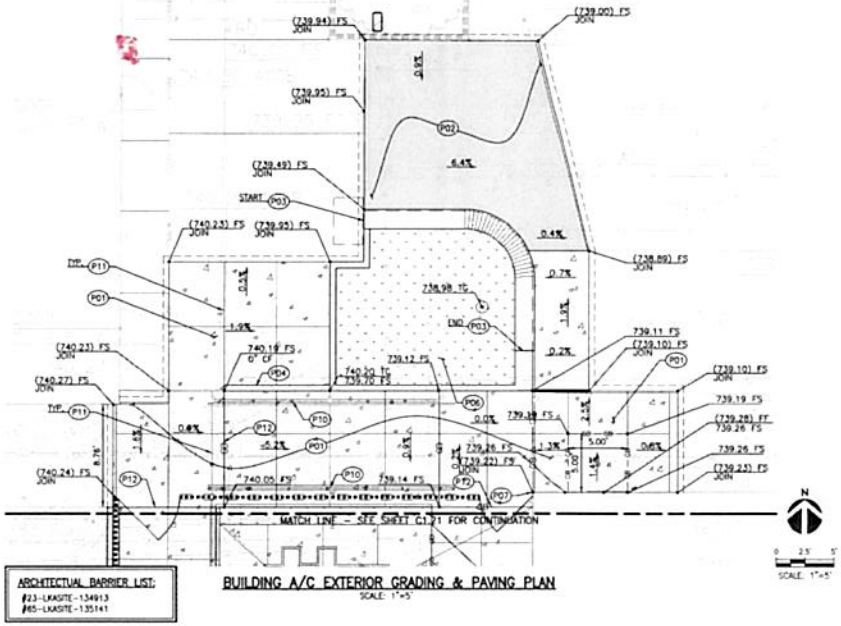

ARCHITECTUAL BARRIER LIST:
#23-LKASITE-134913
#65-LKASITE-135141

BUILDING A/C EXTERIOR GRADING & PAVING PLAN
SCALE: 1"=5'

GENERAL DEMOLITION NOTES:

1. CONTRACTOR TO CLEAR PROJECT SITE AREA WITHIN THE CONFINES OF THE DEMOLITION LIMIT LINE. THE CONTRACTOR SHALL DEMOLISH AND REMOVE FROM THE SITE ALL EXISTING UTILITIES, STRUCTURES, PLANTERS, TREES, AND ALL OTHER SITE FEATURES, UNLESS OTHERWISE NOTED ON THE PLAN.
2. REMOVAL OF LANDSCAPING SHALL INCLUDE ROOTS AND ORGANIC MATERIALS.
3. THE CONTRACTOR SHALL BE RESPONSIBLE FOR OBTAINING ANY AND ALL PERMITS AND SHALL PAY ALL FEES NECESSARY FOR ENCROACHMENT, GRADING, DEMOLITION AND DISPOSAL OF SAID MATERIALS AS REQUIRED BY PRIVATE, LOCAL AND STATE JURISDICTIONS.
4. THE CONTRACTOR SHALL BE RESPONSIBLE FOR A SITE INSPECTION TO FULLY ACKNOWLEDGE THE EXTENT OF THE DEMOLITION WORK.
5. THE CONTRACTOR SHALL VERIFY AND LOCATE ALL EXISTING ABOVE AND UNDERGROUND UTILITIES. LOCATIONS SHOWN ON THE PLANS ARE APPROXIMATE AND ARE SHOWN FOR GENERAL INFORMATION ONLY.
6. DAMAGE TO ANY EXISTING UTILITIES AND SERVICES TO REMAIN SHALL BE THE RESPONSIBILITY OF THE CONTRACTOR. CONTRACTOR SHALL REPAIR AND/OR REPLACE IN KIND.
7. EROSION CONTROL MEASURES SHALL BE IMPLEMENTED TO PREVENT DEBRIS AND UNSUITABLE MATERIALS FROM ENTERING STORM DRAINS, SANITARY SEWERS AND STREETS.
8. DUST CONTROL SHALL BE IMPLEMENTED DURING DEMOLITION.
9. DEMOLITION IS LIMITED TO WITHIN DEMOLITION LIMIT LINE UNLESS NOTED OTHERWISE.
10. THE CONTRACTOR SHALL VERIFY THE LOCATION AND QUANTITY OF EXISTING SURFACE STRUCTURES AND SHALL BE SOLELY RESPONSIBLE FOR ANY UNIDENTIFIED UTILITIES, IMPROVEMENTS, TREES, ETC. TO BE DEMOLISHED AND REMOVED WITHIN THE DEMOLITION LIMIT LINE, INCLUDING APPURTENANT FOUNDATIONS OR SUPPORTS.
11. DEMOLITION CALLOUTS IN THIS SECTION ARE REPRESENTATIVE OF WHAT IS TO BE DONE, NOT AN ITEMIZED ACCOUNTING FOR EACH PIPE, CATCH BASIN, MANHOLE, VAULT, ETC. THAT IS TO BE DEMOLISHED, REMOVED AND DISPOSED OF.

DEMOLITION NOTES:

PROTECT-IN-PLACE

1. PROTECT-IN-PLACE EXISTING FENCE.
2. PROTECT-IN-PLACE EXISTING LANDSCAPE AREA.
3. PROTECT-IN-PLACE EXISTING ROOF DRAIN. PER DETAIL 9 ON SHEET C5.00.
4. PROTECT-IN-PLACE EXISTING COLUMN PER DETAIL 8 ON SHEET C5.00.

DEMOLISH & REMOVE

1. DEMOLISH & REMOVE EXISTING ASPHALT PAVEMENT.
2. DEMOLISH & REMOVE EXISTING CONCRETE PAVEMENT.
3. DEMOLISH & REMOVE EXISTING FENCE.
4. DEMOLISH & REMOVE EXISTING CATCH BASINS.
5. DEMOLISH & REMOVE EXISTING PAVEMENT ADJACENT TO BUILDING PER DETAIL 10 ON SHEET C5.00.

LEGEND:

SAWCUT AND JOIN

EXISTING FOUNDATION

PAVING CONSTRUCTION NOTES

- P01 CONCRETE PAVEMENT. PER DETAIL 2 ON SHEET C5.00.
- P02 ASPHALT PAVEMENT. PER DETAIL 3 ON SHEET C5.00.
- P03 CONCRETE SEAT WALL. PER DETAILS ON ARCHITECTURAL SHEET A1.42.
- P04 CONCRETE CURB. PER DETAIL 6 ON SHEET C5.00.
- P05 DECOMPOSED GRANITE. REFER TO LANDSCAPE SHEETS L3.02 AND L3.03 FOR PLANTING DETAILS.
- P06 LANDSCAPE. REFER TO LANDSCAPE SHEETS L3.02 AND L3.03 FOR PLANTING DETAILS.
- P07 CONCRETE PAVEMENT REPLACEMENT AROUND EXISTING COLUMN. PER DETAIL 8 ON SHEET C5.00.
- P08 ROOF DRAIN ADJUSTMENT PER DETAIL 9 ON SHEET C5.00.
- P09 CONCRETE PAVEMENT CONNECTION TO PROPOSED LANDSCAPE/DG. PER DETAIL 2 ON SHEET C5.00.
- P10 HANDRAIL. PER DETAILS 2 & 11, ARCHITECTURAL SHEET A9.8.
- P11 CONTROL JOINT PER DETAIL 7, SHEET C5.01.
- P12 EXPANSION JOINT PER DETAIL 11, SHEET C5.00.

LEGEND

SAWCUT AND JOIN

GB GRADE BREAK

CONCRETE PAVING
(REFER TO SHEET C5.00 FOR DETAILS)

ASPHALT
(REFER TO SHEET C5.00 FOR DETAILS)

LANDSCAPE
(REFER TO LANDSCAPE PLANS FOR DETAILS)

EXISTING FOUNDATION

NOTE TO CONTRACTOR/CONSTRUCTION SURVEYOR:
CONSTRUCTION STAKING FOR IMPROVEMENTS SHOWN ON THESE PLANS SHALL BE PERFORMED BY A LICENSED LAND SURVEYOR. CONSTRUCTION STAKING SURVEYOR SHALL BE RESPONSIBLE FOR COORDINATION OF THESE PLANS WITH SOURCE DRAWINGS PREPARED BY ARCHITECT, LANDSCAPE ARCHITECT, STRUCTURAL ENGINEER, MEP CONSULTANT AND ANY OTHER DISCIPLINE PRIOR TO START OF STAKING AND CONSTRUCTION. ANY DISCREPANCIES THAT OCCUR SHALL BE BROUGHT TO THE ATTENTION OF THE ARCHITECT PRIOR TO THE START OF CONSTRUCTION SO THAT A CLARIFICATION CAN BE ISSUED.

NOTES

1. CONTRACTOR TO VERIFY LIMITS OF HARDSCAPE REPLACEMENT WITH EXISTING CONSTRUCTION JOINTS. CONTRACTOR TO NOTIFY ENGINEER IF DISCREPANCIES ARE FOUND.

DIVISION OF THE STATE ARCHITECT

DSA APP # 03-XXXXXX

LOS ANGELES UNIFIED SCHOOL DISTRICT

ASSET MANAGEMENT
FACILITIES SERVICES DIVISION
333 S. BEAUDRY AVENUE, 23RD FLOOR
LOS ANGELES, CALIFORNIA 90017

PROJECT TITLE AND SCHOOL LOCATION

BASSETT STREET
ELEMENTARY SCHOOL
15756 BASSETT ST
LAKE BALBOA, CA 91406

VOLUNTARY BARRIER REMOVAL

COLIN NO: 10371927

COMMISSIONED ARCHITECT

Swift Lee Office
543A S. Raymond Ave
Pasadena, CA 91105
T. 323.257.8200
www.swifteeoffice.com

CONSULTANT

kpff
700 South Flower Street
Suite 2100
Los Angeles, CA 90017
O: 213.418.0201
www.kpff.com

STAMPS/SEALS

△ 50% CD	12.18.23
△ 100% CD PROGRESS SET	04.02.24
△ 100% CD	06.03.24
△	

SHEET TITLE

BUILDING A-C
EXTERIOR
DEMOLITION, GRADING
AND PAVING PLAN

PROJECT NO.: PROJECT ARCH:
DRAWN: CHECKED:
SHEET NUMBER

C1.19

SHEET OF

P:\2023\2303349 LAUSD Bassett ES - ADA Upgrades\CAD\Arch\2303349-C1.19DD-GP-PV.dwg, Jun 03, 2024 - 10:02am

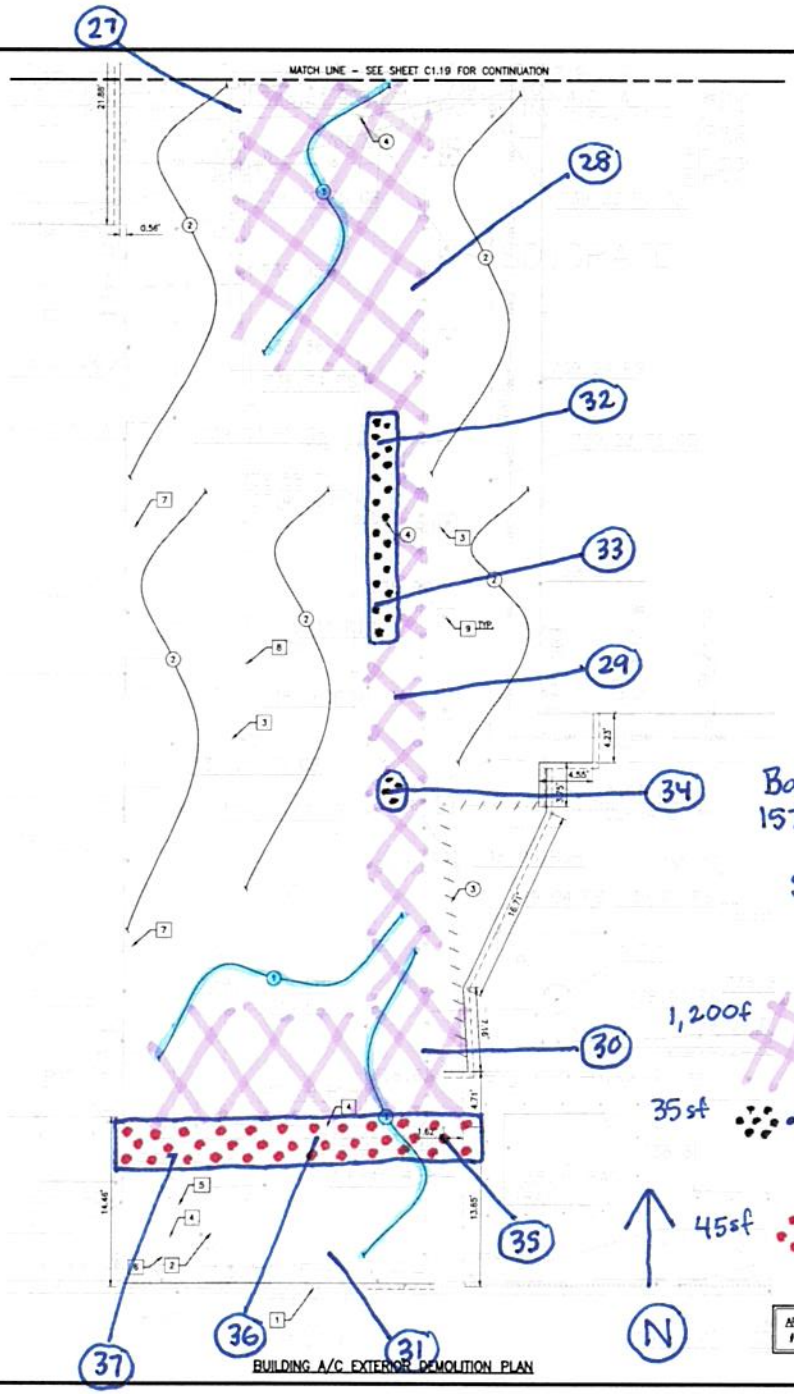

BUILDING A/C EXTERIOR DEMOLITION PLAN

Grounds
(2323-G)
AREA "G" w/
Patches #5 & #6

GENERAL DEMOLITION NOTES:

1. CONTRACTOR TO CLEAR PROJECT SITE AREA WITHIN THE CONFINES OF THE DEMOLITION LIMIT LINE. THE CONTRACTOR SHALL DEMOLISH AND REMOVE FROM THE SITE ALL EXISTING UTILITIES, STRUCTURES, PLANTERS, TREES, AND ALL OTHER SITE FEATURES, UNLESS OTHERWISE NOTED ON THE PLAN.
2. REMOVAL OF LANDSCAPING SHALL INCLUDE ROOTS AND ORGANIC MATERIALS.
3. THE CONTRACTOR SHALL BE RESPONSIBLE FOR OBTAINING ANY AND ALL PERMITS AND SHALL PAY ALL FEES NECESSARY FOR ENCROACHMENT, GRADING, DEMOLITION AND DISPOSAL OF SAID MATERIALS AS REQUIRED BY PRIVATE, LOCAL AND STATE JURISDICTIONS.
4. THE CONTRACTOR SHALL BE RESPONSIBLE FOR A SITE INSPECTION TO FULLY ACKNOWLEDGE THE EXTENT OF THE DEMOLITION WORK.
5. THE CONTRACTOR SHALL VERIFY AND LOCATE ALL EXISTING ABOVE AND UNDERGROUND UTILITIES. LOCATIONS SHOWN ON THE PLANS ARE APPROXIMATE AND ARE SHOWN FOR GENERAL INFORMATION ONLY.
6. DAMAGE TO ANY EXISTING UTILITIES AND SERVICES TO REMAIN SHALL BE THE RESPONSIBILITY OF THE CONTRACTOR. CONTRACTOR SHALL REPAIR AND/OR REPLACE IN KIND.
7. EROSION CONTROL MEASURES SHALL BE IMPLEMENTED TO PREVENT DEBRIS AND UNSUITABLE MATERIALS FROM ENTERING STORM DRAINS, SANITARY SEWERS AND STREETS.
8. DUST CONTROL SHALL BE IMPLEMENTED DURING DEMOLITION.
9. DEMOLITION IS LIMITED TO WITHIN DEMOLITION LIMIT LINE UNLESS NOTED OTHERWISE.
10. THE CONTRACTOR SHALL VERIFY THE LOCATION AND QUANTITY OF EXISTING SURFACE STRUCTURES AND SHALL BE SOLELY RESPONSIBLE FOR ANY UNIDENTIFIED UTILITIES, IMPROVEMENTS, TREES, ETC. TO BE DEMOLISHED AND REMOVED WITHIN THE DEMOLITION LIMIT LINE, INCLUDING APPURTENANT FOUNDATIONS OR SUPPORTS.
11. DEMOLITION CALLOUTS IN THIS SECTION ARE REPRESENTATIVE OF WHAT IS TO BE DONE, NOT AN ITEMIZED ACCOUNTING FOR EACH PIPE, CATCH BASIN, MANHOLE, VAULT, ETC. THAT IS TO BE DEMOLISHED, REMOVED AND DISPOSED OF.

DEMOLITION NOTES:

PROTECT-IN-PLACE

1. PROTECT-IN-PLACE EXISTING FENCE.
2. PROTECT-IN-PLACE EXISTING LANDSCAPE AREA.
3. PROTECT-IN-PLACE EXISTING ROOF DRAIN.
4. PROTECT-IN-PLACE EXISTING WATER VALVE. ADJUST TO GRADE.
5. PROTECT-IN-PLACE EXISTING GROUND BOX. ADJUST TO GRADE.
6. PROTECT-IN-PLACE EXISTING STUB UPS.
7. PROTECT-IN-PLACE EXISTING HVAC UNIT.
8. PROTECT-IN-PLACE EXISTING STORM DRAIN CLEANOUT. ADJUST TO GRADE.
9. PROTECT-IN-PLACE EXISTING COLUMN PER DETAIL 8 ON SHEET C5.00.

DEMOLISH & REMOVE

1. DEMOLISH & REMOVE EXISTING ASPHALT PAVEMENT.
2. DEMOLISH & REMOVE EXISTING CONCRETE PAVEMENT.
3. DEMOLISH & REMOVE EXISTING FENCE.
4. DEMOLISH & REMOVE EXISTING CATCH BASINS.

LEGEND:

SAWCUT AND JOIN

EXISTING FOUNDATION

Bassett Elementary School (2323)
15756 Bassett St., Lake Balboa, CA 91406
ADA Improvements Project
Sampled By: GNS Eric Bracamontes
Sample Date: 07-12-2024

Sample Material:

1,200sf • Asphalt Paving (CORE)
sample #: 27-31

35sf • Asphalt Paving - Patch (CORE)
sample #: 32-34

45sf sample #: 35-37

ARCHITECTUAL BARRIER LIST:
#137-NO ABL

SCALE: 1"=5'

DIVISION OF THE STATE ARCHITECT

DSA APP # 03-XXXXXX

LOS ANGELES UNIFIED SCHOOL DISTRICT

ASSET MANAGEMENT FACILITIES SERVICES DIVISION
333 S. BEAUDRY AVENUE, 23RD FLOOR
LOS ANGELES, CALIFORNIA 90017

PROJECT TITLE AND SCHOOL LOCATION

BASSETT STREET ELEMENTARY SCHOOL
15756 BASSETT ST
LAKE BALBOA, CA 91406

VOLUNTARY BARRIER REMOVAL

COLIN NO 10371927

COMMISSIONED ARCHITECT

Swift Lee Office
543A S. Raymond Ave.
Pasadena, CA 91105
T. 323.257.8200
www.swiftleeoffice.com

CONSULTANT

kpff
700 South Flower Street
Suite 2100
Los Angeles, CA 90017
O: 213.418.0201
www.kpff.com

STAMPS/SEALS

50% CD	12.18.23
100% CD PROGRESS SET	04.02.24
100% CD	06.03.24

SHEET TITLE

BUILDING B-C PLAY AREA DEMOLITION PLAN

PROJECT NO.: PROJECT MGR.
DRAWN: CHECKED:
SHEET NUMBER

C1.20

DATE: SHEET OF

P:\2021\2001343 LAUSD Bassett ES ADA Upgrades\CAD\Drawings\2001343-C1.20-GP-PV.dwg Jun 03, 2024 - 10:20am

Grounds
(2323-G)
AREA "H"
Patch #7

Bassett Elementary School (2323)
15756 Bassett St., Lake Balboa, CA 91406
ADA Improvements Project
Sampled By: CNS Eric Bracamontes
Sample Date: 07-12-2024

Sample Material:

300sf • Asphalt Paving (CORE)
Sample #: 38-40

58sf [redacted] • Asphalt Paving - Patch (CORE)
Sample #: 41-43

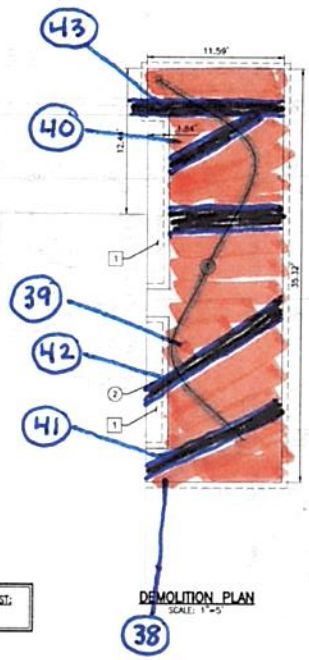

N

ARCHITECTUAL BARRIER LIST:
#125-LKASITE-134915

DEMOLITION PLAN
SCALE: 1"=5'

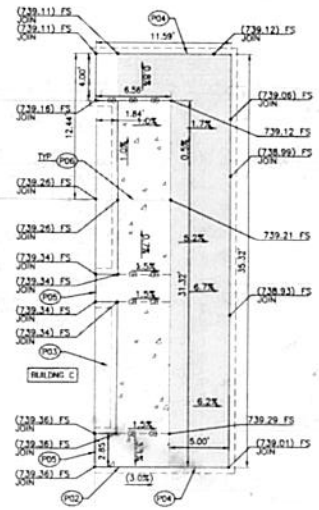

ARCHITECTUAL BARRIER LIST:
#125-LKASITE-134915

GRADING & PAVING PLAN
SCALE: 1"=5'

GENERAL DEMOLITION NOTES:

1. CONTRACTOR TO CLEAR PROJECT SITE AREA WITHIN THE CONFINES OF THE DEMOLITION LIMIT LINE. THE CONTRACTOR SHALL DEMOLISH AND REMOVE FROM THE SITE ALL EXISTING UTILITIES, STRUCTURES, PLANTERS, TREES, AND ALL OTHER SITE FEATURES, UNLESS OTHERWISE NOTED ON THE PLAN.
2. REMOVAL OF LANDSCAPING SHALL INCLUDE ROOTS AND ORGANIC MATERIALS.
3. THE CONTRACTOR SHALL BE RESPONSIBLE FOR OBTAINING ANY AND ALL PERMITS AND SHALL PAY ALL FEES NECESSARY FOR ENCROACHMENT, GRADING, DEMOLITION AND DISPOSAL OF SAID MATERIALS AS REQUIRED BY PRIVATE, LOCAL AND STATE JURISDICTIONS.
4. THE CONTRACTOR SHALL BE RESPONSIBLE FOR A SITE INSPECTION TO FULLY ACKNOWLEDGE THE EXTENT OF THE DEMOLITION WORK.
5. THE CONTRACTOR SHALL VERIFY AND LOCATE ALL EXISTING ABOVE AND UNDERGROUND UTILITIES. LOCATIONS SHOWN ON THE PLANS ARE APPROXIMATE AND ARE SHOWN FOR GENERAL INFORMATION ONLY.
6. DAMAGE TO ANY EXISTING UTILITIES AND SERVICES TO REMAIN SHALL BE THE RESPONSIBILITY OF THE CONTRACTOR. CONTRACTOR SHALL REPAIR AND/OR REPLACE IN KIND.
7. EROSION CONTROL MEASURES SHALL BE IMPLEMENTED TO PREVENT DEBRIS AND UNSUITABLE MATERIALS FROM ENTERING STORM DRAINS, SANITARY SEWERS AND STREETS.
8. DUST CONTROL SHALL BE IMPLEMENTED DURING DEMOLITION.
9. DEMOLITION IS LIMITED TO WITHIN DEMOLITION LIMIT LINE UNLESS NOTED OTHERWISE.
10. THE CONTRACTOR SHALL VERIFY THE LOCATION AND QUANTITY OF EXISTING SURFACE STRUCTURES AND SHALL BE SOLELY RESPONSIBLE FOR ANY UNIDENTIFIED UTILITIES, IMPROVEMENTS, TREES, ETC. TO BE DEMOLISHED AND REMOVED WITHIN THE DEMOLITION LIMIT LINE, INCLUDING APPURTENANT FOUNDATIONS OR SUPPORTS.
11. DEMOLITION CALLOUTS IN THIS SECTION ARE REPRESENTATIVE OF WHAT IS TO BE DONE, NOT AN ITEMIZED ACCOUNTING FOR EACH PIPE, CATCH BASIN, MANHOLE, VAULT, ETC. THAT IS TO BE DEMOLISHED, REMOVED AND DISPOSED OF.

DEMOLITION NOTES:

DEMOLISH & REMOVE

1. DEMOLISH & REMOVE EXISTING ASPHALT PAVEMENT.
2. DEMOLISH & REMOVE EXISTING DRINKING FOUNTAIN. REFER TO ARCHITECTURAL DETAIL 8, SHEET A5.20.

PROTECT-IN-PLACE

1. PROTECT-IN-PLACE EXISTING CONCRETE PAVEMENT AND FOUNDATION.

LEGEND:

SAWCUT AND JOIN

PAVING CONSTRUCTION NOTES

(P01) ASPHALT PAVEMENT. PER DETAIL 1 ON SHEET C5.00.

(P02) CONCRETE PAVEMENT CONNECTION TO EXISTING CONCRETE PAVEMENT PER DETAIL 5, SHEET C5.01.

(P03) DRINKING FOUNTAIN. REFER TO ARCHITECTURAL DETAIL 8, SHEET A5.21.

(P04) ASPHALT PAVEMENT CONNECTION TO EXISTING ASPHALT PAVEMENT PER DETAIL 8, SHEET C5.01.

(P05) CONCRETE PAVEMENT AGAINST EXISTING WALL PER DETAIL 2, SHEET C5.01.

(P06) CONTROL JOINT PER DETAIL 7, SHEET C5.01.

NOTE TO CONTRACTOR/CONSTRUCTION SURVEYOR:
CONSTRUCTION STAKING FOR IMPROVEMENTS SHOWN ON THESE PLANS SHALL BE PERFORMED BY A LICENSED LAND SURVEYOR. CONSTRUCTION STAKING SURVEYOR SHALL BE RESPONSIBLE FOR COORDINATION OF THESE PLANS WITH SOURCE DRAWINGS PREPARED BY ARCHITECT, LANDSCAPE ARCHITECT, STRUCTURAL ENGINEER, MEP CONSULTANT AND ANY OTHER DISCIPLINE PRIOR TO START OF STAKING AND CONSTRUCTION. ANY DISCREPANCIES THAT OCCUR SHALL BE BROUGHT TO THE ATTENTION OF THE ARCHITECT PRIOR TO THE START OF CONSTRUCTION SO THAT A CLARIFICATION CAN BE ISSUED.

NOTES

1. CONTRACTOR TO VERIFY LIMITS OF HARDSCAPE REPLACEMENT. MATCH EXISTING CONSTRUCTION JOINTS. CONTRACTOR TO NOTIFY ENGINEER IF DISCREPANCIES ARE FOUND.

LEGEND

SAWCUT AND JOIN

GRADE BREAK

ASPHALT
(REFER TO SHEET C5.00 FOR DETAILS)

DIVISION OF THE STATE ARCHITECT

DSA APP # 03-XXXXXX

LOS ANGELES UNIFIED SCHOOL DISTRICT

ASSET MANAGEMENT
FACILITIES SERVICES DIVISION
333 S. BEAUDRY AVENUE, 23RD FLOOR
LOS ANGELES, CALIFORNIA 90017

PROJECT TITLE AND SCHOOL LOCATION

BASSETT STREET
ELEMENTARY SCHOOL
15756 BASSETT ST
LAKE BALBOA, CA 91406

VOLUNTARY BARRIER REMOVAL

COLN NO: 10371927

COMMISSIONED ARCHITECT

Swift Lee Office
543A S. Raymond Ave
Pasadena, CA 91105
T. 323.257.8200
www.swiftleeoffice.com

CONSULTANT

kpff
700 South Flower Street
Suite 2100
Los Angeles, CA 90017
O: 213.418.0201
www.kpff.com

STAMPS/SEALS

50% CD	12.18.23
100% CD PROGRESS SET	04.02.24
100% CD	06.03.24

SHEET TITLE

BUILDING C EAST
DEMOLITION, GRADING
AND PAVING PLAN

PROJECT NO.: | PROJECT ARCH.
DRAWN: | CHECKED:
SHEET NUMBER

C1.24

DATE: | SHEET OF:

P:\2023\2300340 LAUSD Bassett ES- ADA Upgrade\CAD\Sheets\2300340-C1.24(C-GP-PV).dwg, Jul 01, 2024 - 10:22am

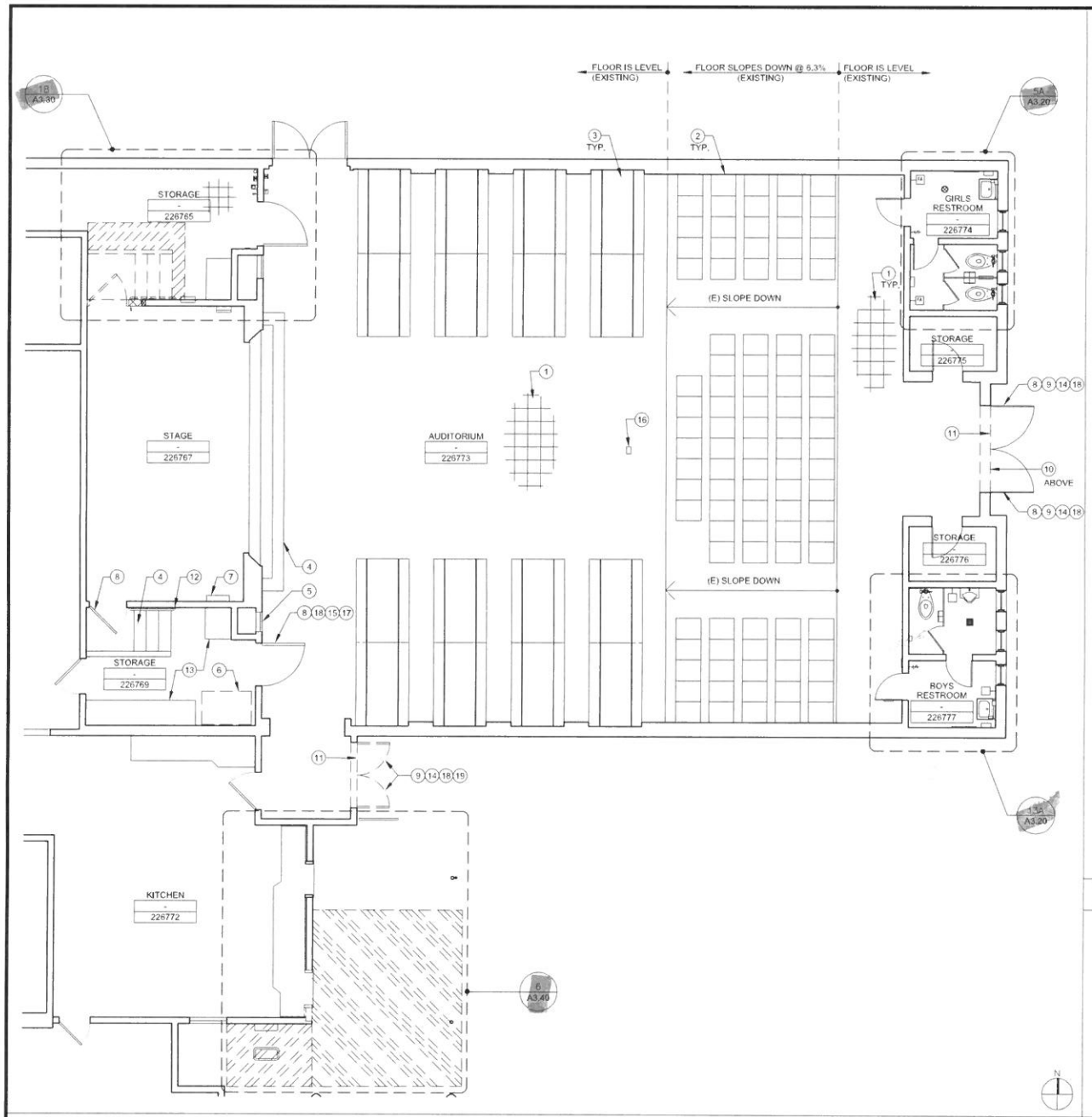

MULTI-PURPOSE BUILDING AUDITORIUM SEATING PLAN - DEMO (RM.# 226773)

SCALE: 1/4"=1'-0" | 8

DEMOLITION KEYNOTES:

1. VCT FLOORING TO REMAIN
2. AUDITORIUM SEAT TO REMAIN
3. FOLD-DOWN LUNCH TABLE & BENCH TO REMAIN
4. STAIRS TO REMAIN
5. LOUVER VENT COVER TO REMAIN
6. REFRIGERATOR TO BE REMOVED
7. LADDER TO REMAIN
8. DOOR TO REMAIN
9. EXIT DEVICE WITH VERTICAL RODS TO BE REMOVED
10. FIXED TRANSOM PANEL TO REMAIN
11. DOOR THRESHOLD TO BE REMOVED
12. RAILING TO REMAIN
13. BUILT-IN CABINET TO REMAIN
14. AUTOMATIC DOOR CLOSER TO BE REMOVED
15. KICK-DOWN HOLD-OPEN DEVICE TO BE REMOVED
16. FLOOR MOUNTED ELECTRICAL BOX TO REMAIN
17. LOCKSET TO BE REMOVED
18. DOOR FRAME TO REMAIN
19. DOOR TO BE REMOVED

DEMOLITION LEGEND:

EXISTING TO REMAIN

EXISTING TO BE REMOVED

DEMOLITION NOTES:

1. FOR DEMOLITION NOTES, SEE 3/T-3.
2. FOR (E) WALL TYPE DESIGNATIONS, SEE DEMO PLANS. FOR PROPOSED WALL TYPE DESIGNATIONS, SEE PROPOSED PLANS. FOR (E) WALL TYPE DETAILS, SEE A9.1. FOR PROPOSED WALL TYPE DETAILS, SEE A9.2.

NOTES

SCALE: N.T.S. | 3

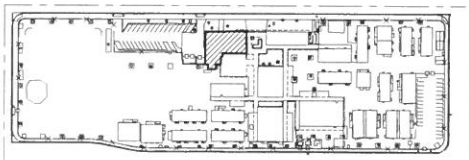

KEY PLAN

SCALE: N.T.S. | 4

DIVISION OF THE STATE ARCHITECT

DSA APP # 03-XXXXXX

LOS ANGELES UNIFIED SCHOOL DISTRICT

ASSET MANAGEMENT FACILITIES SERVICES DIVISION
333 S. BEAUDRY AVENUE, 23RD FLOOR
LOS ANGELES, CALIFORNIA 90017

PROJECT TITLE AND SCHOOL LOCATION

BASSETT STREET ELEMENTARY SCHOOL
15756 BASSETT ST
LAKE BALBOA, CA 91406

VOLUNTARY BARRIER REMOVAL

COLIN NO: 10373370

COMMISSIONED ARCHITECT

Swift Lee Office
1231 N Spring St, Suite B-203
Los Angeles, CA 90012
T. 323.257.8200
www.swiftleeoffice.com

CONSULTANT

STAMPS/SEALS

LICENSED ARCHITECT NATHAN A SWIFT C-28798 03-31-25 RENEWAL DATE STATE OF CALIFORNIA

50% CD	12.20.23
50% CD (PLATFORM LIFT)	02.23.24
100% CD	06.03.24

SHEET TITLE:

MULTI-PURPOSE BUILDING AUDITORIUM SEATING PLANS DEMO

PROJECT NO.: | PROJECT ARCH:
DRAWN: | CHECKED:
SHEET NUMBER

A3.10

DATE | SHEET OF

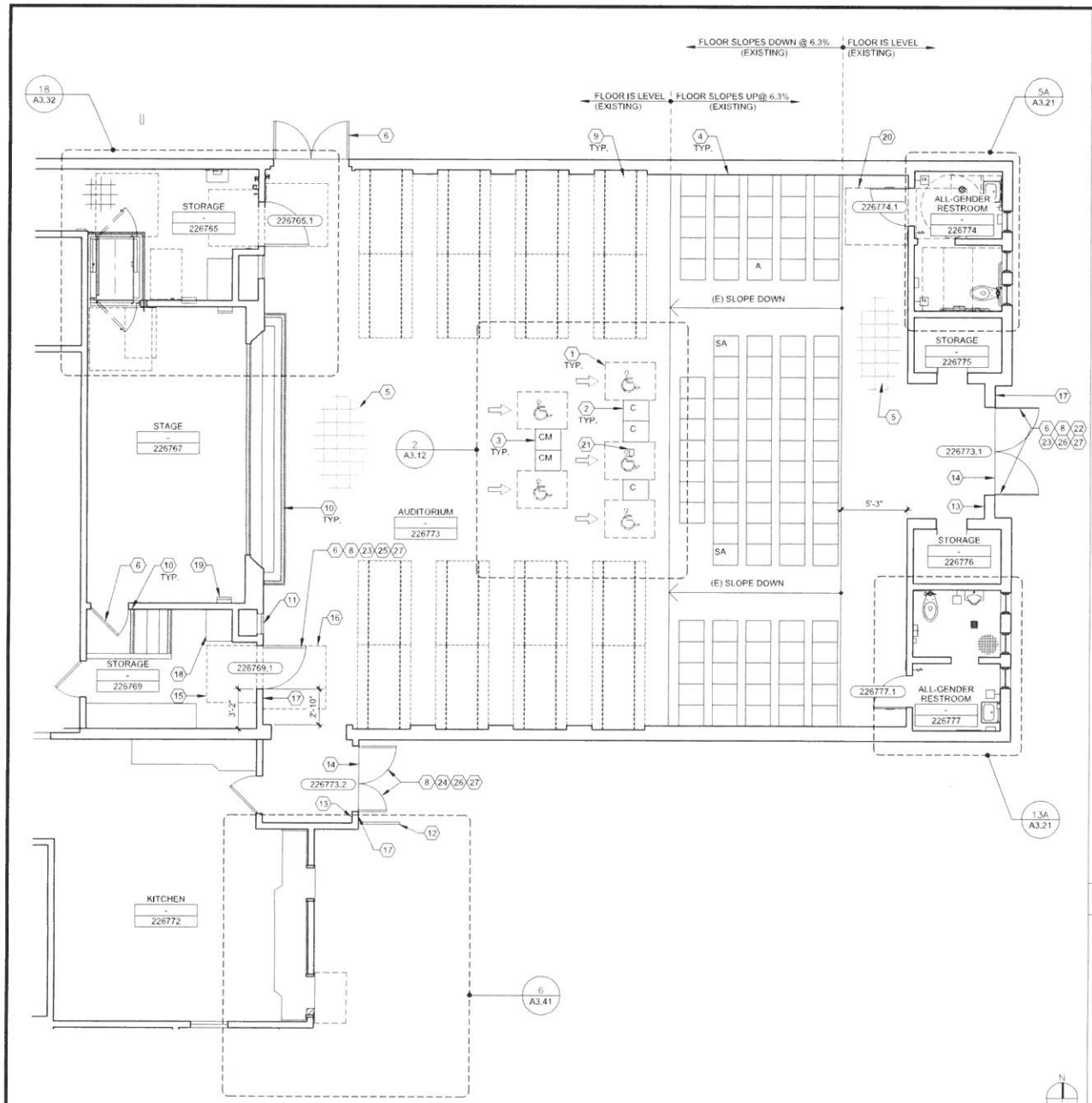

MODERNIZATION KEYNOTES:

1. 33"W X 48"D MIN. WHEELCHAIR SPACE (SEE NOTE 1)
2. COMPANION SEAT (FIXED)
3. COMPANION SEAT (MOVABLE)
4. (E) AUDITORIUM SEATING
5. (E) V.C.T. FLOORING
6. (E) DOOR
7. (E) FIXED TRANSOM
8. AUTOMATIC CLOSER TO BE REPLACED
9. (E) FOLD-DOWN LUNCH TABLES & BENCHES
10. AT EACH EXISTING STEP INSTALL 2" WIDE MINIMUM TO 4" WIDE MAXIMUM SLIP RESISTANT STRIPING W/ DURABLE PAINT OF A CONTRASTING COLOR WITHIN 1" OF NOSING EDGE. THE STRIPE SHALL EXTEND THE FULL WIDTH OF THE STEP (SEE 18/A9.8)
11. (E) LOUVER VENT COVER
12. (E) RAILING
13. TACTILE EXIT SIGN
14. DOOR THRESHOLD TO BE REPLACED WITH LOW PROFILE TYPE
15. 54"W X 48"D MIN. MANEUVERING CLEARANCE ON PUSH SIDE OF DOOR
16. 60"W X 60"D MIN. MANEUVERING CLEARANCE ON PULL SIDE OF DOOR
17. ROOM I.D. SIGN (SEE 12/A9.4)
18. (E) 80" HIGH BUILT-IN CASEWORK
19. (E) LADDER
20. 52"W X 60"D MIN. MANEUVERING CLEARANCE ON PULL SIDE OF DOOR
21. (E) FLOOR MOUNTED ELECTRICAL BOX
22. REMOVABLE MULLION
23. (E) DOOR FRAME
24. (E) DOOR TO BE REPLACED
25. (E) LOCKSET TO BE REPLACED
26. (E) EXIT DEVICE TO BE REPLACED
27. (E) DOOR & FRAME TO BE PATCHED, SANDED, & PAINTED ON BOTH SIDES AFTER REMOVAL OF CLOSER, KICK-DOWN HOLD-OPEN DEVICE, & OTHER HARDWARE

MODERNIZATION LEGEND:

- EXISTING SEAT
- WHEELCHAIR SPACE (36" X 48")
- C — COMPANION SEAT (REPLACEMENT)
- CM — COMPANION SEAT (MOVABLE)
- A — DESIGNATED AISLE SEAT, SEE10/A3.12. (EXISTING TO BE MODIFIED)
- SA — SEMI-AMBULENT SEAT (EXISTING- NO ALTERATIONS)
- DIRECTION OF WHEELCHAIR APPROACH
- WARNING STRIPE (SEE KEYNOTE 10)

NOTES:

1. SURFACE SLOPE WITHIN THE WHEELCHAIR CLEAR FLOOR SPACE SHALL NOT EXCEED 1.5% IN ANY DIRECTION.
2. EACH DESIGNATED AISLE SEAT SHALL BE IDENTIFIED BY A SIGN WITH THE INTERNATIONAL SYMBOL OF ACCESSIBILITY.
3. FOR FLOOR PLAN NOTES, SEE 4/T-2.

AUDITORIUM SEATING CALCULATION:

SEAT TYPE	NUMBER OF SEATS		
	EXISTING	REQUIRED	PROPOSED
STANDARD (NON-AISLE)	81		81
STANDARD (AISLE)	20		17
WHEELCHAIR SPACES	0	4 (PER 51-150)	5
COMPANION SEATS	0	4	5
DESIGNATED AISLE SEATS	0	1 (5% MIN.)	1
SEMI-AMBIVALENT SEATS	0	2 (1% ≥ 2)	2
TOTAL	101		111

NOTES — SCALE: N.T.S. — 3

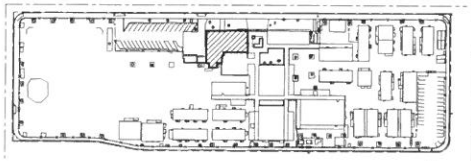

KEY PLAN — SCALE: N.T.S. — 4

MULTI-PURPOSE BUILDING AUDITORIUM SEATING PLAN - PROPOSED (RM.# 226773) — SCALE: 1/4"=1'-0" — 8

DIVISION OF THE STATE ARCHITECT

DSA APP # 03-XXXXXX

LOS ANGELES UNIFIED SCHOOL DISTRICT

ASSET MANAGEMENT FACILITIES SERVICES DIVISION
333 S. BEAUDRY AVENUE, 23RD FLOOR
LOS ANGELES, CALIFORNIA 90017

PROJECT TITLE AND SCHOOL LOCATION

BASSETT STREET ELEMENTARY SCHOOL
15756 BASSETT ST
LAKE BALBOA, CA 91406

VOLUNTARY BARRIER REMOVAL

COLIN NO: 10373370

COMMISSIONED ARCHITECT

Swift Lee Office
1231 N Spring St, Suite B-203
Los Angeles, CA 90012
T. 323.257.8200
www.swiftleeoffice.com

CONSULTANT

STAMPS/SEALS

LICENSED ARCHITECT NAMAN A SWIFT C-28798 03-31-25 RENEWAL DATE STATE OF CALIFORNIA

50% CD	12.20.23
50% CD (PLATFORM LIFT)	02.23.24
100% CD	06.03.24

SHEET TITLE

MULTI-PURPOSE BUILDING AUDITORIUM SEATING PLAN PROPOSED

PROJECT NO.: PROJECT ARCH:
DRAWN: CHECKED:

SHEET NUMBER

A3.11

DATE SHEET OF

NOTES:
1. SURFACE SLOPE WITHIN THE WHEELCHAIR CLEAR FLOOR SPACE SHOULD NOT EXCEED 2% IN ANY DIRECTION.

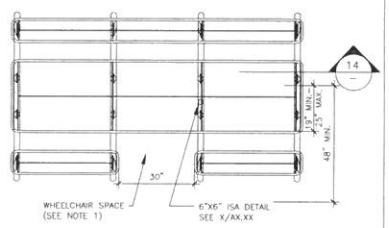

10' ACCESSIBLE LUNCH TABLE PLAN — SCALE: 1" = 1'-0" — 13

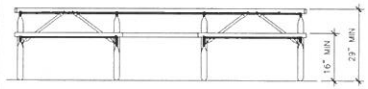

10' ACCESSIBLE LUNCH TABLE ELEVATION — SCALE: 1" = 1'-0" — 14

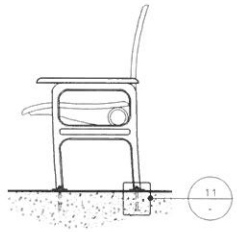

AUDITORIUM SEATING — SCALE: 1" = 1'-0" — 9

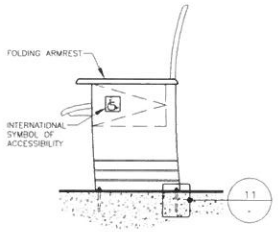

DESIGNATED AISLE SEAT — SCALE: 1" = 1'-0" — 10

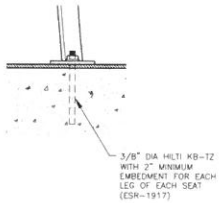

ANCHOR DETAIL — SCALE: 3" = 1'-0" — 11

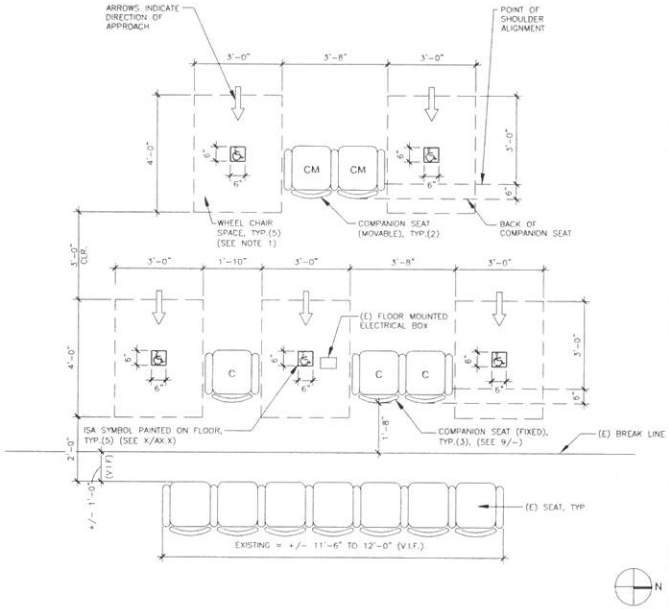

WHEELCHAIR SEATING PLAN — SCALE: 1/2" = 1'-0" — 2

Dimensional Data

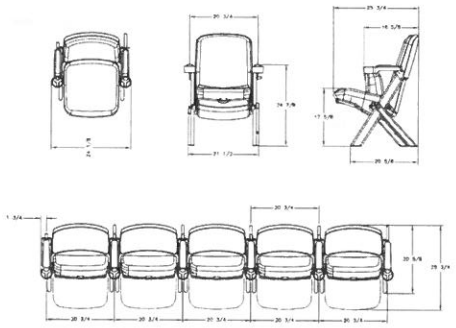

REMOVABLE AUDITORIUM SEATING — SCALE: N.T.S. — 4

DIVISION OF THE STATE ARCHITECT

DSA APP # 03-XXXXXX

LOS ANGELES UNIFIED SCHOOL DISTRICT

ASSET MANAGEMENT
FACILITIES SERVICES DIVISION
333 S. BEAUDRY AVENUE, 23RD FLOOR
LOS ANGELES, CALIFORNIA 90017

PROJECT TITLE AND SCHOOL LOCATION

BASSETT STREET ELEMENTARY SCHOOL
15756 BASSETT ST
LAKE BALBOA, CA 91406

VOLUNTARY BARRIER REMOVAL

COLIN NO: 10373370

COMMISSIONED ARCHITECT

Swift Lee Office
1231 N Spring St. Suite B-203
Los Angeles, CA 90012
T. 323.257.8200
www.swiftleeoffice.com

CONSULTANT

STAMPS/SEALS

LICENSED ARCHITECT NATHAN A. SWIFT C-28798 03-31-25 RENEWAL DATE STATE OF CALIFORNIA

50% CD	12.20.23
50% CD (PLATFORM LIFT)	02.23.24
100% CD	06.03.24

SHEET TITLE

MULTI PURPOSE BUILDING DETAILS

PROJECT NO.: | PROJECT ARCH.
DRAWN: | CHECKED:

SHEET NUMBER

A3.12

DATE: | SHEET: OF

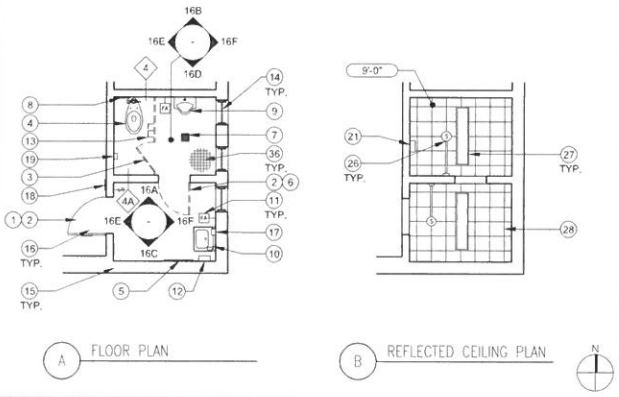

MULTI-PURPOSE BLDG. BOYS RESTROOM PLANS - DEMO (RM.# 226777) | SCALE: 1/4" = 1'-0" | 13

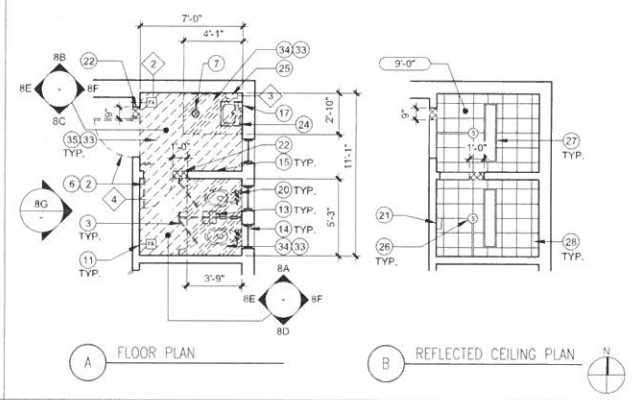

MULTI-PURPOSE BLDG. GIRLS RESTROOM PLANS - DEMO (RM.# 226774) | SCALE: 1/4" = 1'-0" | 5

DEMOLITION KEYNOTES:

1. DOOR & FRAME TO REMAIN
2. DOOR HARDWARE TO BE REMOVED
3. FLOOR/WALL MOUNTED PARTITION TO BE REMOVED
4. WATER CLOSET TO REMAIN
5. MIRROR TO REMAIN
6. DOOR & FRAME TO BE REMOVED
7. FLOOR DRAIN TO REMAIN
8. TOILET SEAT COVER DISPENSER TO REMAIN
9. URINAL TO REMAIN
10. LAVATORY TO REMAIN
11. FIRE ALARM DEVICE TO REMAIN
12. PAPER TOWEL DISPENSER TO REMAIN
13. TOILET PAPER DISPENSER TO BE REMOVED
14. WINDOW TO REMAIN
15. WALL TO REMAIN
16. DOOR SIGN TO BE REMOVED
17. SOAP DISPENSER TO REMAIN
18. WALL SIGN TO BE REMOVED
19. SANITARY NAPKIN DISPOSAL TO REMAIN
20. WATER CLOSET TO BE REMOVED (SEE P3.20)
21. P.A SPEAKER TO REMAIN
22. PORTION OF WALL TO BE REMOVED
23. MIRROR TO BE REMOVED
24. LAVATORY TO BE REMOVED (SEE P3.20)
25. PAPER TOWEL DISPENSER TO BE REMOVED
26. SMOKE DETECTOR & SURFACE-MOUNTED CONDUIT TO REMAIN (SEE NOTE 1)
27. LIGHT FIXTURE TO REMAIN
28. GLUED-ON ACOUSTICAL CEILING TILES TO REMAIN
29. CERAMIC TILE COVE BASE TO BE REMOVED
30. LATH & PLASTER WALL FINISH TO BE REMOVED
31. CERAMIC TILE COVE BASE TO REMAIN
32. CERAMIC WALL TILE TO REMAIN
33. MIXED SIZE CERAMIC MOSAIC FLOOR TILE TO BE REMOVED
34. CONCRETE SLAB ON GRADE TO BE REMOVED
35. CONCRETE SLAB ON GRADE TO REMAIN
36. MIXED SIZE CERAMIC MOSAIC FLOOR TILE TO REMAIN
37. SURFACE MOUNTED ELECTRICAL CONDUIT & FIRE ALARM DEVICE TO BE DETACHED & PROTECTED IN PLACE (SEE NOTE 1)
38. LATH & PLASTER WALL FINISH TO REMAIN
39. WALL ACCESS PANEL TO REMAIN

DEMOLITION NOTES:

1. (E) FIRE ALARM SYSTEM SHALL BE PROTECTED IN PLACE & SHALL REMAIN OPERATIONAL THROUGHOUT THE DURATION OF CONSTRUCTION
2. FOR DEMOLITION NOTES, SEE 3/T.3
3. FOR (E) WALL TYPE DESIGNATIONS REFER TO DEMO. PLANS. FOR PROPOSED WALL TYPE DESIGNATIONS REFER TO PROPOSED FLOOR PLANS. FOR (E) WALL TYPE DETAILS REFER TO A9.1 & PROPOSED WALL TYPE DETAILS REFER TO A9.2.

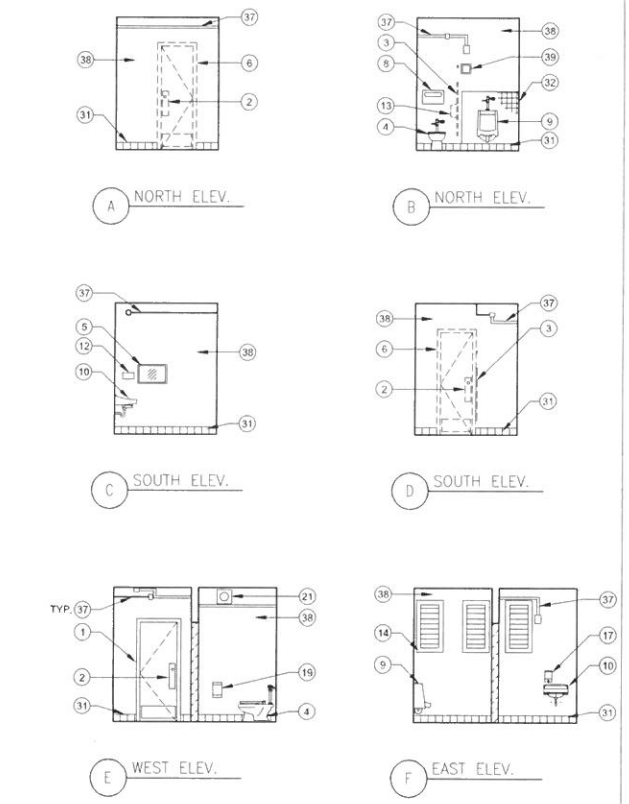

MULTI-PURPOSE BLDG. BOYS RESTROOM INTERIOR ELEVATIONS - DEMO (RM.# 226777) | SCALE: 1/4"=1'-0" | 16

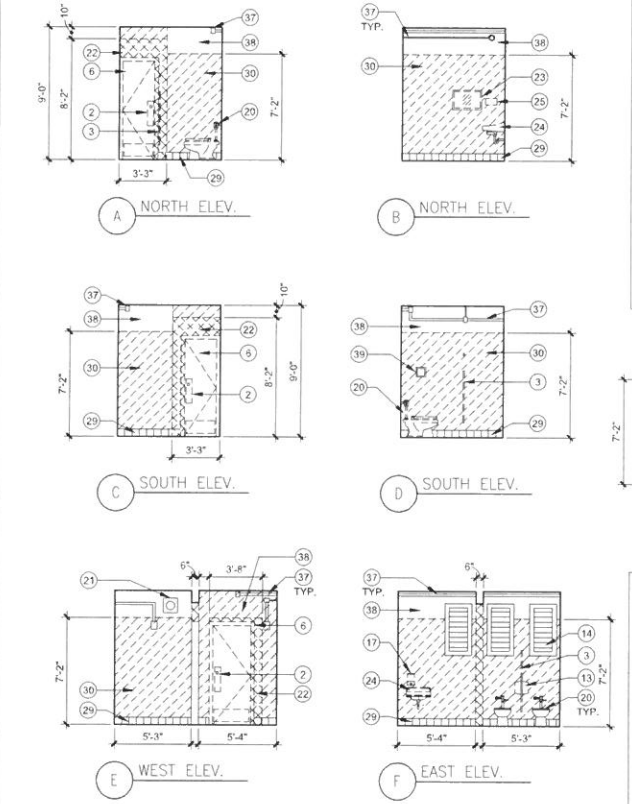

MULTI-PURPOSE BLDG. GIRLS RESTROOM INTERIOR ELEVATIONS - DEMO (RM.# 226774) | SCALE: 1/4"=1'-0" | 8

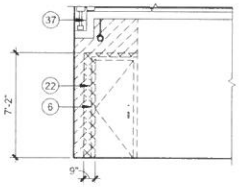

DEMOLITION LEGEND:

- EXISTING TO REMAIN
- EXISTING TO BE REMOVED
- WALL TO BE REMOVED
- FINISH TO BE REMOVED
- CONCRETE SLAB ON GRADE TO BE REMOVED
- WALL TYPE (SEE NOTE 2)

NOTES | SCALE: N.T.S. | 3

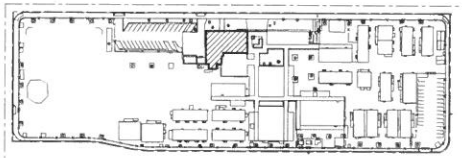

KEY PLAN | SCALE: N.T.S. | 4

DIVISION OF THE STATE ARCHITECT

DSA APP # 03-XXXXXX

LOS ANGELES UNIFIED SCHOOL DISTRICT

ASSET MANAGEMENT FACILITIES SERVICES DIVISION
333 S. BEAUDRY AVENUE, 23RD FLOOR
LOS ANGELES, CALIFORNIA 90017

PROJECT TITLE AND SCHOOL LOCATION

BASSETT STREET ELEMENTARY SCHOOL
15756 BASSETT ST
LAKE BALBOA, CA 91406

VOLUNTARY BARRIER REMOVAL

COLIN NO: 10373370

COMMISSIONED ARCHITECT

Swift Lee Office
1231 N Spring St, Suite B-203
Los Angeles, CA 90012
T. 323.257.8200
www.swiftleeoffice.com

CONSULTANT

STAMPS/SEALS

LICENSED ARCHITECT NATHAN A. SWIFT C-28798 03-31-25 RENEWAL DATE STATE OF CALIFORNIA

50% CD	12.20.23
50% CD (PLATFORM LIFT)	02.23.24
100% CD	06.03.24

SHEET TITLE:

MULTI-PURPOSE BUILDING RESTROOM PLANS & ELEVATIONS - DEMO

PROJECT NO.: | PROJECT ARCH:
DRAWN: | CHECKED:
SHEET NUMBER

A3.20

DATE: | SHEET: OF:

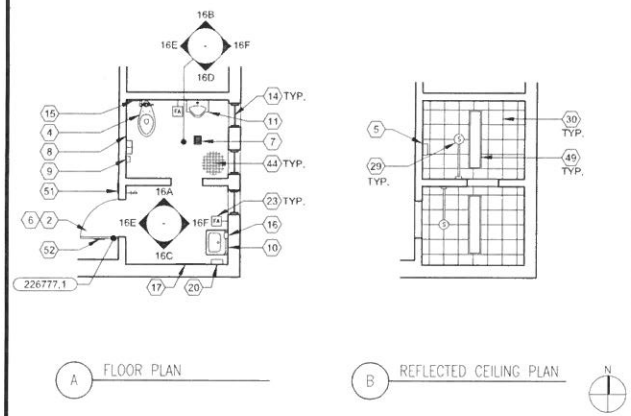

M-P BLDG. NON-ACCESSIBLE ALL-GENDER RESTROOM PLANS - PROPOSED (RM.# 226777) | SCALE: 1/4" = 1'-0" | 13

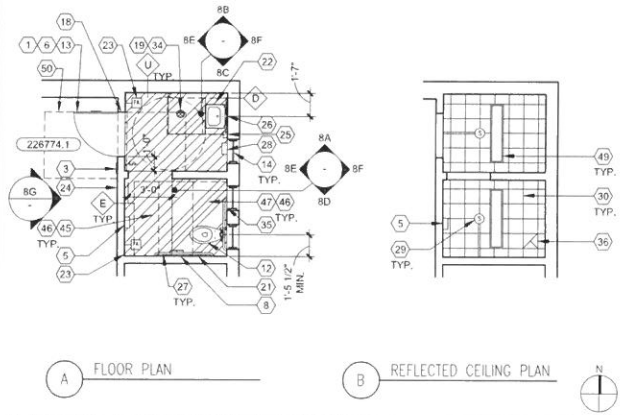

M-P BLDG. ACCESSIBLE ALL-GENDER RESTROOM PLANS - PROPOSED (RM.# 226774) | SCALE: 1/4" = 1'-0" | 5

MODERNIZATION KEYNOTES

1. GEOMETRIC DOOR SYMBOL (SEE 7/A9.11)
2. (E) DOOR AND FRAME
3. WALL-MOUNTED ROOM I.D. SIGN (SEE 15/A9.11)
4. (E) WATER CLOSET
5. (E) P.A. SPEAKER
6. DOOR HARDWARE TO BE REPLACED (SEE A0.1)
7. (E) FLOOR DRAIN
8. TOILET PAPER DISPENSER (SEE A9.7)
9. (E) SANITARY NAPKIN DISPOSAL
10. (E) LAVATORY
11. (E) URINAL
12. WATER CLOSET (SEE P3.21)
13. DOOR & FRAME TO BE REPLACED (SEE A0.1)
14. (E) WINDOW
15. (E) TOILET SEAT COVER DISPENSER
16. (E) SOAP DISPENSER
17. (E) MIRROR
18. (E) DOOR OPENING TO BE ENLARGED SEE 6/S2.01 FOR FRAMING DETAIL.
19. (E) FLOOR DRAIN
20. (E) PAPER TOWEL DISPENSER
21. SANITARY NAPKIN DISPOSAL (SEE 15/A9.5)
22. LAVATORY (SEE P3.21)
23. (E) FIRE ALARM DEVICE (SEE NOTE 1)
24. (E) WALL
25. SOAP DISPENSER (SEE 15/A9.5)
26. MIRROR (SEE 15/A9.5)
27. GRAB BAR (SEE 1/A9.5)
28. PAPER TOWEL DISPENSER (SEE 15/A9.5)
29. (E) SMOKE DETECTOR (SEE NOTE 1)
30. (E) GLUED-ON ACOUSTICAL CEILING TILE
31. (E) CERAMIC TILE COVE BASE
32. (E) LATH & PLASTER TO BE PATCHED & PAINTED AS REQ'D
33. WALL OPENING (SEE 6/S2.01)
34. TRAP PRIMER (SEE 1/P0.50)
35. TOILET SEAT COVER DISPENSER (SEE 14/A9.5)
36. CEILING MOUNTED EXHAUST FAN (SEE M3.21)
37. 4"X4" CERAMIC WALL TILE (SEE 1/A0.2)
38. (E) CERAMIC WALL TILE
39. CERAMIC TILE COVE BASE (SEE 20/A9.2)
40. CLEANOUT (SEE PLMG. DWGS.)
41. WALL ACCESS PANEL (SEE PLMG. DWGS.)
42. (E) ACCESS PANEL
43. LATH & PLASTER, PAINTED, TO MATCH EXISTING
44. (E) MIXED SIZE CERAMIC MOSAIC FLOOR TILE
45. CONC. SLAB ON GRADE
46. CERAMIC MOSAIC FLOOR TILE OVER FULL MORTAR SETTING BED
47. (E) CONC. SLAB ON GRADE
48. (E) SURFACE MOUNTED ELECTRICAL CONDUIT & FIRE ALARM TO BE REINSTALLED (SEE NOTE 1)
49. (E) LIGHT FIXTURE
50. 52"W X 60"D MIN. MANEUVERING CLEARANCE ON PULL SIDE OF DOOR
51. WALL-MOUNTED ROOM I.D. SIGN (SEE 11/A9.11)
52. NON-ACCESSIBLE GEOMETRIC DOOR SYMBOL (SEE 11/A9.11)

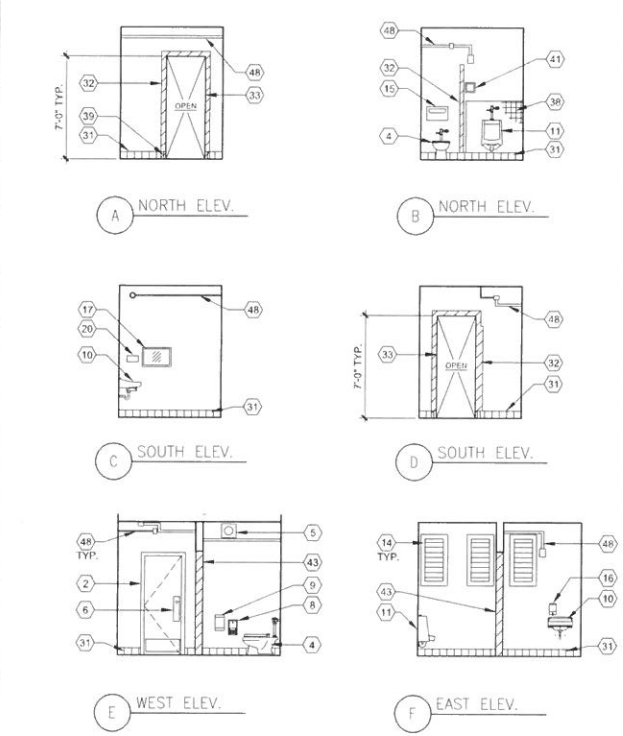

M-P BLDG. NON-ACCESSIBLE ALL-GENDER R.R. INT. ELEVATIONS - PROPOSED (RM.# 226777) | SCALE: 1/4"=1'-0" | 16

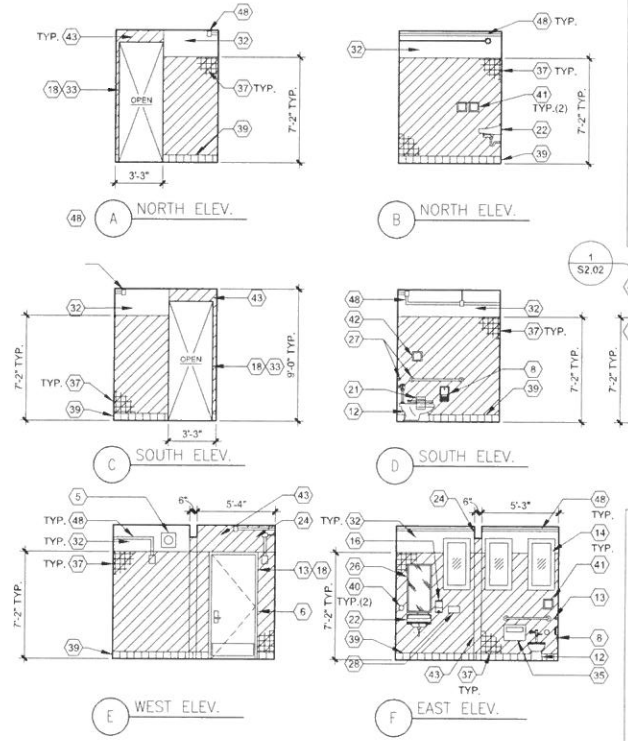

M-P BLDG. ACCESSIBLE ALL-GENDER R.R. INT. ELEVATIONS - PROPOSED (RM.# 226774) | SCALE: 1/4"=1'-0" | 8

MODERNIZATION NOTES:

1. (E) FIRE ALARM SYSTEM SHALL BE PROTECTED IN PLACE & SHALL REMAIN OPERATIONAL THROUGHOUT THE DURATION OF CONSTRUCTION
2. PROVIDE GEOMETRIC DOOR SYMBOL ON BOTH SIDES OF RESTROOM DOOR
3. FOR TILE DESIGN, SEE A9.13

MODERNIZATION LEGEND:

- EXISTING
- FINISH TO BE REPLACED
- CONC. SLAB ON GRADE (SEE STRUCT. DWGS.) SLOPE TO DRAIN @ 1/8" PER FOOT MAX.
- WALL TYPE (SEE 4/T-2 NOTE #5)

NOTES | SCALE: N.T.S. | 3

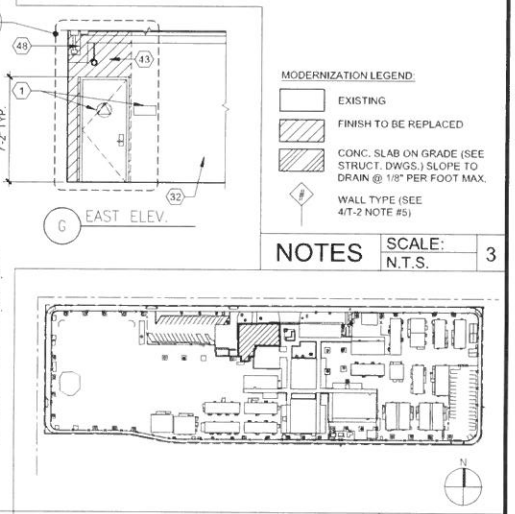

KEY PLAN | SCALE: N.T.S. | 4

DIVISION OF THE STATE ARCHITECT

DSA APP # 03-XXXXXX

LOS ANGELES UNIFIED SCHOOL DISTRICT

ASSET MANAGEMENT FACILITIES SERVICES DIVISION
333 S. BEAUDRY AVENUE, 23RD FLOOR
LOS ANGELES, CALIFORNIA 90017

PROJECT TITLE AND SCHOOL LOCATION

BASSETT STREET ELEMENTARY SCHOOL
15756 BASSETT ST
LAKE BALBOA, CA 91406

VOLUNTARY BARRIER REMOVAL

COLIN NO: 10373370

COMMISSIONED ARCHITECT

Swift Lee Office
1231 N Spring St. Suite B-203
Los Angeles, CA 90012
T. 323.257.8200
www.swiftleeoffice.com

CONSULTANT

STAMPS/SEALS

LICENSED ARCHITECT NATHAN A SWIFT C-28798 03-31-25 RENEWAL DATE STATE OF CALIFORNIA

50% CD	12.20.23
50% CD (PLATFORM LIFT)	02.23.24
100% CD	06.03.24

SHEET TITLE

MULTI-PURPOSE BUILDING RESTROOM PLANS & ELEVATIONS - PROPOSED

PROJECT NO.: | PROJECT ARCH
DRAWN: | CHECKED:

SHEET NUMBER

A3.21

DATE | SHEET OF

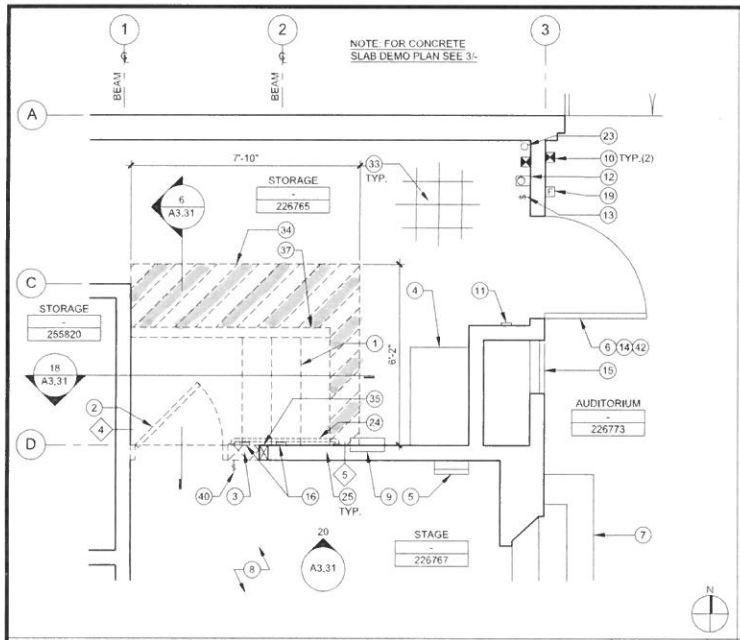

MULTI-PURPOSE BUILDING PLATFORM LIFT FLOOR PLAN - DEMO (RM.# 226765) | SCALE: 1/2"=1'-0" | 18

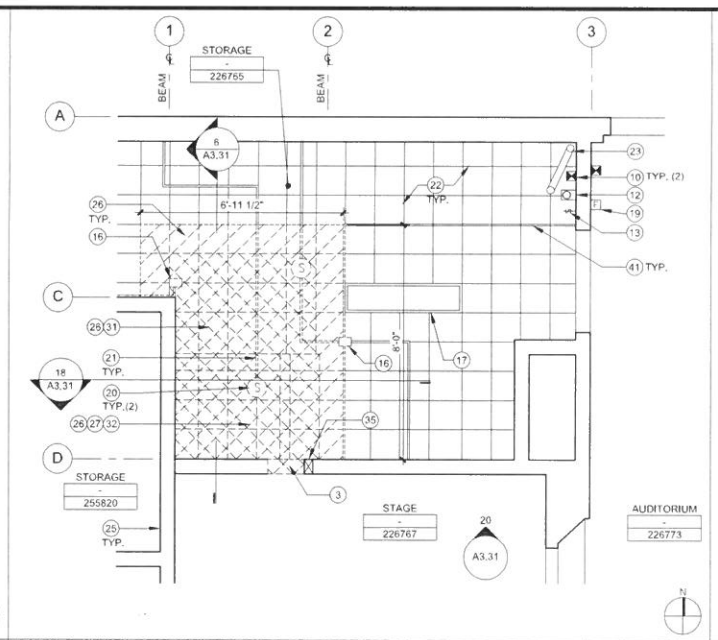

MULTI-PURPOSE BUILDING PLATFORM LIFT REFLECTED CEILING PLAN - DEMO (RM.# 226765) | SCALE: 1/2"=1'-0" | 6

DEMOLITION LEGEND:

- EXISTING TO REMAIN
- EXISTING TO BE REMOVED
- FINISH TO BE REMOVED
- FLOOR, WALL, OR CEILING TO BE REMOVED
- WALL TYPE (SEE NOTE 3)

DEMOLITION NOTES:

1. AREAS TO BE REMOVED ARE DIMENSIONED TO THE PROPOSED FINISHED WORK. DEMOLITION BEYOND THE DIMENSIONED AREA MAY BE REQUIRED TO PROPERLY CONSTRUCT THE FINISHED WORK.
2. FOR GENERAL DEMOLITION NOTES SEE 3/T.3.
3. FOR (E) WALL TYPE DESIGNATIONS REFER TO DEMO. PLANS, FOR PROPOSED WALL TYPE DESIGNATIONS REFER TO PROPOSED FLOOR PLANS, FOR (E) WALL TYPE DETAILS REFER TO A9.1 & PROPOSED WALL TYPE DETAILS REFER TO A9.2.
4. EXISTING 6X8 BEAM AT GRID 1 AND GRID 2 TO REMAIN AND BE PROTECTED IN PLACE
5. EXISTING DOUBLE 2X8 HEADER TO REMAIN AND TO BE PROTECTED IN PLACE.

DEMOLITION LEGEND & NOTES | SCALE: N.T.S. | 2

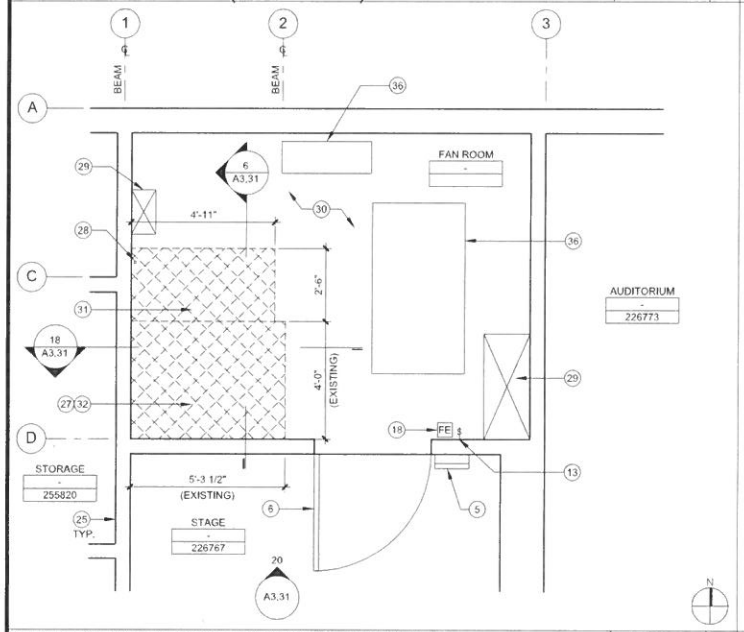

MULTI-PURPOSE BUILDING PLATFORM LIFT FAN ROOM FLOOR PLAN - DEMO | SCALE: 1/2"=1'-0" | 20

DEMOLITION KEYNOTES:

1. WOOD STAIRS TO BE REMOVED
2. DOOR, FRAME, & HARDWARE TO BE REMOVED
3. PORTION OF WALL TO BE REMOVED (SEE NOTE 5)
4. 80" HIGH BUILT-IN CASEWORK TO REMAIN
5. LADDER TO REMAIN
6. DOOR & FRAME TO REMAIN
7. WOOD STEPS TO REMAIN
8. STAGE PLATFORM & HARDWOOD FLOORING TO REMAIN
9. ELEC. PANEL TO REMAIN
10. FIRE ALARM PULL STATION & HORN-STROBE TO REMAIN
11. BOILER CONTROL TO REMAIN
12. PA SPEAKER TO REMAIN
13. ELECTRICAL SWITCH TO REMAIN
14. LOCKSET AND KICK-DOWN HOLD-OPEN DEVICE TO BE REMOVED
15. HVAC WALL REGISTER TO REMAIN
16. SURFACE MOUNTED ELEC. JUNCTION BOX & WIREMOLD TO BE REMOVED
17. LIGHT FIXTURE TO REMAIN
18. FIRE EXTINGUISHER TO REMAIN
19. MANUAL FIRE ALARM PULL STATION TO REMAIN
20. SMOKE DETECTOR TO BE RELOCATED
21. SURFACE-MOUNTED ELEC. WIREMOLD TO BE REMOVED
22. GLUED-ON ACOUSTICAL CEILING TILES OVER LATH & PLASTER TO REMAIN
23. EXPOSED PLUMBING WASTE PIPE TO REMAIN
24. WALL-MOUNTED WOOD HANDRAIL AND BRACKETS TO BE REMOVED
25. WALL TO REMAIN
26. GLUED-ON ACOUSTICAL CEILING TILES AND LATH & PLASTER TO BE REMOVED
27. 1X6 DIAG. WOOD SHEATHING & 2X8 FLOOR JOISTS TO BE REMOVED (SEE NOTE 4)
28. ELECTRICAL CONDUIT TO BE REMOVED
29. SHEET METAL DUCT TO REMAIN
30. 2" CONCRETE TOPPING TO REMAIN
31. 2" CONCRETE TOPPING, 1X6 DIAG. WOOD SHEATHING, AND 3X8 FLOOR JOISTS TO BE REMOVED (SEE NOTE 4)
32. SHEET METAL CAP TO BE REMOVED
33. VCT FLOOR TILE TO REMAIN
34. VCT FLOOR TILE TO BE REMOVED
35. JAMB POST TO REMAIN. CONTRACTOR TO VERIFY LOCATION IN FIELD. (SEE STRUCT. DWGS.)
36. ALL MECH. EQUIP., PIPING, & DUCTWORK TO REMAIN & TO BE PROTECTED IN PLACE
37. PARTIAL HEIGHT 2X WALL W/ LATH & PLASTER BOTH SIDES W/ WOOD CAP TO BE REMOVED
38. CONCRETE SLAB ON GRADE TO REMAIN (SEE STRUCT. DWGS.)
39. 4" CONCRETE SLAB ON GRADE W/ 6"X6"/ #10X#10 R.W.M. TO BE REMOVED (SEE STRUCT. DWGS.)
40. ELECTRICAL SWITCH TO BE RELOCATED
41. SURFACE-MOUNTED ELECTRICAL WIREMOLD TO REMAIN
42. AUTOMATIC DOOR CLOSER TO BE REMOVED

DEMOLITION KEYNOTES | SCALE: N.T.S. | 12

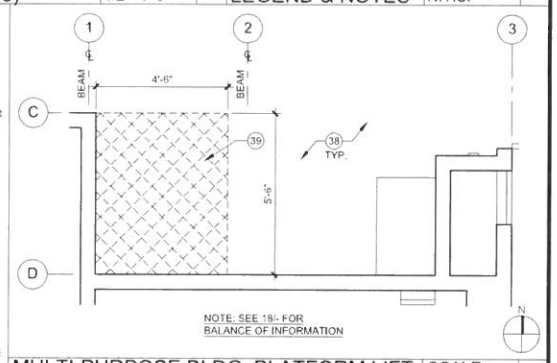

MULTI-PURPOSE BLDG. PLATFORM LIFT PARTIAL FLOOR PLAN - DEMO (#226765) | SCALE: 1/2" = 1'-0" | 3

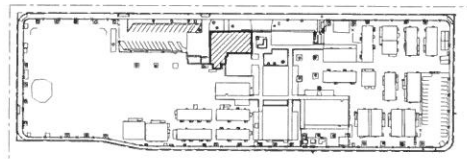

KEY PLAN | SCALE: N.T.S. | 4

DIVISION OF THE STATE ARCHITECT

DSA APP # 03-XXXXXX

LOS ANGELES UNIFIED SCHOOL DISTRICT

ASSET MANAGEMENT FACILITIES SERVICES DIVISION
333 S. BEAUDRY AVENUE, 23RD FLOOR
LOS ANGELES, CALIFORNIA 90017

PROJECT TITLE AND SCHOOL LOCATION

BASSETT STREET ELEMENTARY SCHOOL
15756 BASSETT ST
LAKE BALBOA, CA 91406

VOLUNTARY BARRIER REMOVAL

COLIN NO: 10373370

COMMISSIONED ARCHITECT

Swift Lee Office
1231 N Spring St, Suite B-203
Los Angeles, CA 90012
T. 323.257.8200
www.swiftleeoffice.com

CONSULTANT

STAMPS/SEALS

LICENSED ARCHITECT NATHAN A. SWIFT C-28798 03-31-25 RENEWAL DATE STATE OF CALIFORNIA

50% CD	12.20.23
50% CD (PLATFORM LIFT)	02.23.24
100% CD	06.03.24

SHEET TITLE

MULTI-PURPOSE BUILDING PLATFORM LIFT FLOOR PLANS - DEMO

PROJECT NO.: | PROJECT ARCH.
DRAWN | CHECKED
SHEET NUMBER

A3.30

DATE | SHEET OF

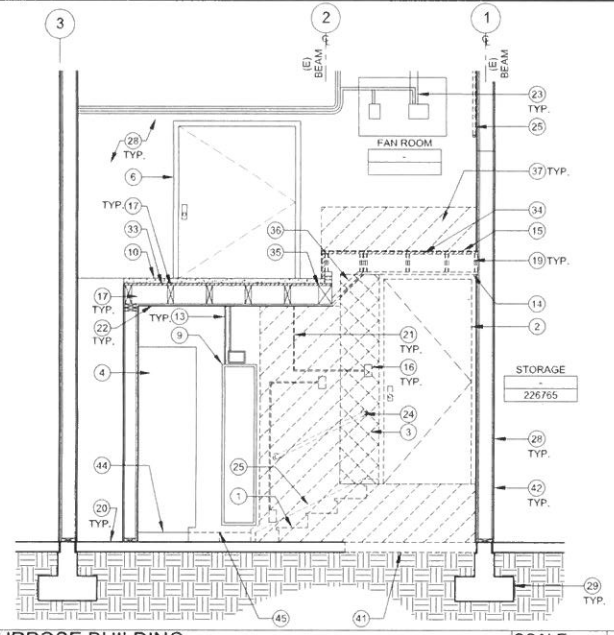

MULTI-PURPOSE BUILDING PLATFORM LIFT SECTION - DEMO | SCALE: 1/2"=1'-0" | 18

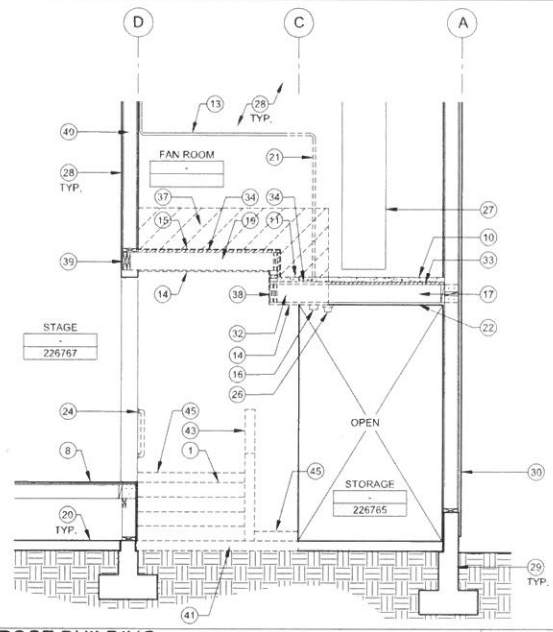

MULTI-PURPOSE BUILDING PLATFORM LIFT SECTION - DEMO | SCALE: 1/2"=1'-0" | 6

DEMOLITION LEGEND:

- EXISTING TO REMAIN
- EXISTING TO BE REMOVED
- FINISH TO BE REMOVED
- FLOOR, WALL, OR CEILING TO BE REMOVED
- WALL TYPE (SEE NOTE 3)

DEMOLITION LEGEND | SCALE: 1/2"=1'-0" | 2

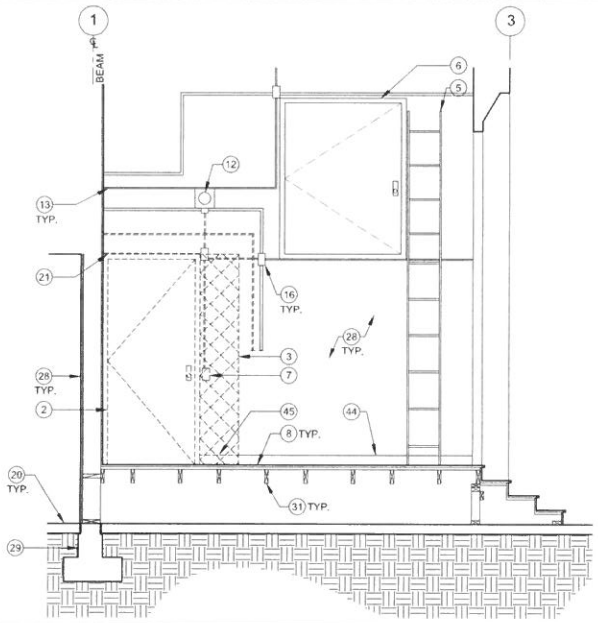

NORTH INT. ELEVATION @ STAGE - DEMO | SCALE: 1/2"=1'-0" | 20

DEMOLITION KEYNOTES:

1. WOOD STAIRS TO BE REMOVED
2. DOOR, FRAME & HARDWARE TO BE REMOVED
3. PORTION OF WALL TO BE REMOVED (SEE NOTE 4)
4. 80" HIGH BUILT-IN CASEWORK TO REMAIN
5. WELDED STEEL LADDER TO REMAIN
6. DOOR, FRAME & HARDWARE TO REMAIN
7. ELECTRICAL SWITCH TO BE REMOVED
8. HARDWOOD FLOORING @ STAGE TO REMAIN
9. ELEC. PANEL TO REMAIN
10. 2" CONCRETE TOPPING TO REMAIN
11. 2" CONCRETE TOPPING TO BE REMOVED
12. PA SPEAKER TO REMAIN
13. SURFACE-MOUNTED ELECTRICAL WIREMOLD/ CONDUIT TO REMAIN
14. GLUED-ON ACOUSTICAL CEILING TILES AND LATH & PLASTER TO BE REMOVED
15. SHEET METAL CAP TO BE REMOVED
16. SURFACE-MOUNTED ELEC. JUNCTION BOX TO BE REMOVED
17. 3X8 FLOOR JOIST @ 16" O.C. TO REMAIN (SEE STRUCT. DWGS.)
18. ELEC. JUNCTION BOX TO REMAIN
19. 2X8 FLOOR JOIST @ 16" O.C. TO BE REMOVED
20. 4" CONCRETE SLAB ON GRADE TO REMAIN
21. SURFACE-MOUNTED ELECTRICAL WIREMOLD/ CONDUIT TO BE REMOVED
22. GLUED-ON ACOUSTICAL CEILING TILES AND LATH & PLASTER TO REMAIN
23. PRESSURE GAUGES AND COPPER PIPING TO REMAIN
24. HANDRAIL TO BE REMOVED
25. WOOD SKIRT TRIM TO BE REMOVED (BOTH SIDES OF STAIR)
26. SMOKE DETECTOR TO BE REMOVED
27. SHEET METAL DUCT TO REMAIN
28. LATH & PLASTER WALL FINISH TO REMAIN
29. CONT. CONCRETE FOOTING TO REMAIN
30. EXTERIOR CEMENT PLASTER FINISH TO REMAIN
31. 2X6 WOOD FLOOR JOIST @ 16" O.C. TO REMAIN
32. 3X8 FLOOR JOIST @ 16" O.C. TO BE REMOVED
33. 1X6 DIAG. WOOD SHEATHING TO REMAIN
34. 1X6 DIAG. WOOD SHEATHING TO BE REMOVED
35. 6X8 WOOD BEAM TO REMAIN
36. 2X4 DIAG. WOOD FURRING TO BE REMOVED
37. LATH & PLASTER WALL FINISH TO BE REMOVED
38. DOUBLE 2X8 FLOOR JOIST TO BE REMOVED
39. DOUBLE 2X8 HEADER TO REMAIN
40. 2X6 WOOD STUDS @ 16" O.C. TO REMAIN
41. 4" CONC. SLAB ON GRADE TO BE REMOVED (SEE STRUCT. DWGS.)
42. WALL TO REMAIN
43. PARTIAL HEIGHT 2X WALL W/ LATH & PLASTER BOTH SIDES W/ WOOD CAP TO BE REMOVED
44. WOOD BASE TO REMAIN
45. WOOD BASE TO BE REMOVED

DEMO KEYNOTES | SCALE: N.T.S. | 12

DEMOLITION NOTES:

1. AREAS TO BE REMOVED ARE DIMENSIONED TO THE PROPOSED FINISHED WORK. DEMOLITION BEYOND THE DIMENSIONED AREA MAY BE REQUIRED TO PROPERLY CONSTRUCT THE FINISHED WORK.
2. FOR GENERAL DEMOLITION NOTES SEE 3/T.3.
3. FOR (E) WALL TYPE DESIGNATIONS REFER TO DEMO. PLANS. FOR PROPOSED WALL TYPE DESIGNATIONS REFER TO PROPOSED FLOOR PLANS. FOR (E) WALL TYPE DETAILS REFER TO A9.1 & PROPOSED WALL TYPE DETAILS REFER TO A9.2.
4. EXISTING DOUBLE 2X8 HEADER & JAMB POST TO REMAIN AND TO BE PROTECTED IN PLACE (SEE STRUCT. DWGS.)

DEMOLITION NOTES | SCALE: N.T.S. | 3

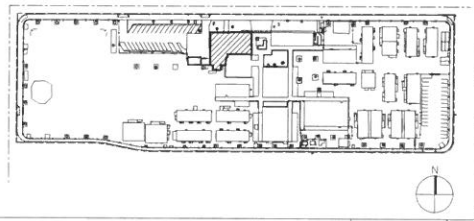

KEY PLAN | SCALE: N.T.S. | 4

DIVISION OF THE STATE ARCHITECT

DSA APP # 03-XXXXXX

LOS ANGELES UNIFIED SCHOOL DISTRICT

ASSET MANAGEMENT FACILITIES SERVICES DIVISION
333 S. BEAUDRY AVENUE, 23RD FLOOR
LOS ANGELES, CALIFORNIA 90017

PROJECT TITLE AND SCHOOL LOCATION

BASSETT STREET ELEMENTARY SCHOOL
15756 BASSETT ST
LAKE BALBOA, CA 91406

VOLUNTARY BARRIER REMOVAL

COLIN NO: 10373370

COMMISSIONED ARCHITECT

Swift Lee Office
1231 N Spring St, Suite B-203
Los Angeles, CA 90012
T. 323.257.8200
www.swiftleeoffice.com

CONSULTANT

STAMPS/SEALS

LICENSED ARCHITECT NATHAN A SWIFT C-28798 03-31-25 RENEWAL DATE STATE OF CALIFORNIA

△ 50% CD	12.20.23
△ 50% CD (PLATFORM LIFT)	02.23.24
△ 100% CD	06.03.24
△	

SHEET TITLE

MULTI-PURPOSE BUILDING PLATFORM LIFT SECTIONS - DEMO

PROJECT NO.: | PROJECT ARCH.
DRAWN: | CHECKED:

SHEET NUMBER

A3.31

DATE: | SHEET: OF:

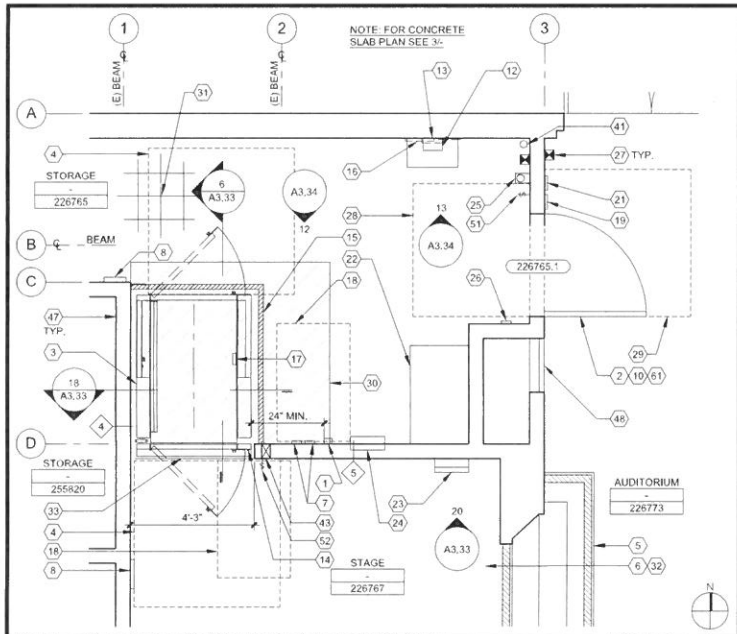

MULTI-PURPOSE BUILDING PLATFORM LIFT FLOOR PLAN - PROPOSED (RM.# 226765) | SCALE: 1/2"=1'-0" | 18

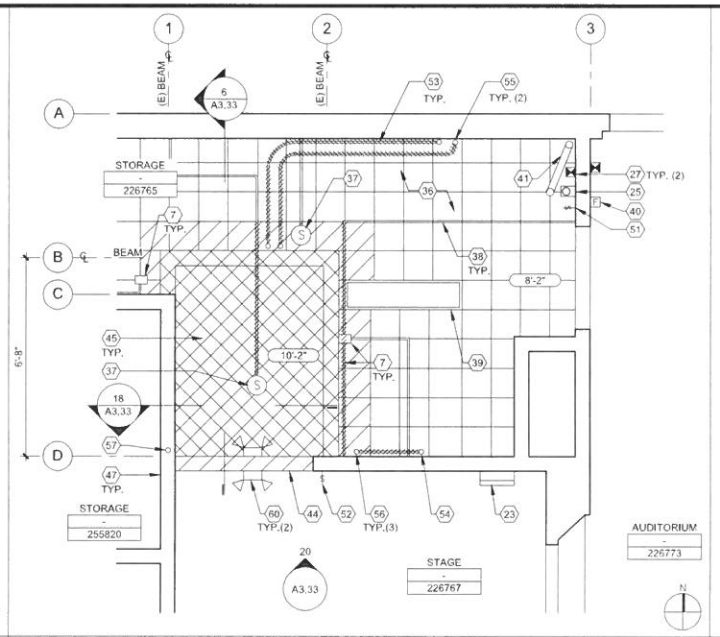

MULTI-PURPOSE BUILDING PLATFORM LIFT REFLECTED CEILING PLAN - PROPOSED (RM.# 226765) | SCALE: 1/2"=1'-0" | 6

MODERNIZATION LEGEND:

- EXISTING WALL
- EXISTING GLUED-ON ACOUSTICAL CEILING TILES OVER LATH & PLASTER
- FINISH TO BE REPLACED
- FLOOR, WALL, OR CEILING TO BE REPLACED
- # WALL TYPE, SEE NOTE #2
- PROPOSED SURFACE-MOUNTED CONDUIT/ WIREMOLD (OR EXISTING RELOCATED) (SEE ELEC. DRAWINGS)

FLOOR PLAN NOTES:

1. (E) WALL, FLR & CEILING FINISH TO BE PATCHED/ REPAIRED OR REPLACED TO MATCH SURROUNDING @ LOCATION OF ALTERATIONS.
2. FOR (E) WALL TYPE DESIGNATIONS REFER TO DEMO. PLANS. FOR PROPOSED WALL TYPE DESIGNATIONS REFER TO PROPOSED FLR PLANS. FOR (E) WALL TYPE DETAILS REFER TO A9.1 & PROPOSED WALL TYPE DETAILS REFER TO A9.2.

MODERNIZATION KEYNOTES (CONTINUED FROM 12/-):

51. (E) ELECTRICAL SWITCH
52. (E) ELECTRICAL SWITCH RELOCATED
53. SURFACE MOUNTED ELEC. CONDUIT (SEE ELEC. DWGS.)
54. SURFACE MOUNTED ELEC. CONDUIT DOWN TO ELEC. PANEL (SEE ELEC. DWGS.)
55. SURFACE MOUNTED ELEC. CONDUIT DOWN TO DISCONNECT SWITCH (SEE ELEC. DWGS.)
56. SURFACE MOUNTED ELEC. CONDUIT UP TO FAN ROOM (SEE ELEC. DWGS.)
57. ELEC. CONDUIT IN WALL DOWN TO LIFT (SEE ELEC. DWGS.)
58. ELEC. CONDUIT DOWN TO LIFT ROOM (SEE ELEC. DWGS.)
59. ELEC. CONDUIT CONCEALED IN FLOOR JOISTS (SEE ELEC. DWGS.)
60. EMERGENCY LIGHT W/ BATTERY BACK-UP (SEE ELEC. DWGS.)
61. AUTOMATIC DOOR CLOSER TO BE REPLACED

MODERNIZATION LEGEND & NOTES | SCALE: N.T.S. | 2

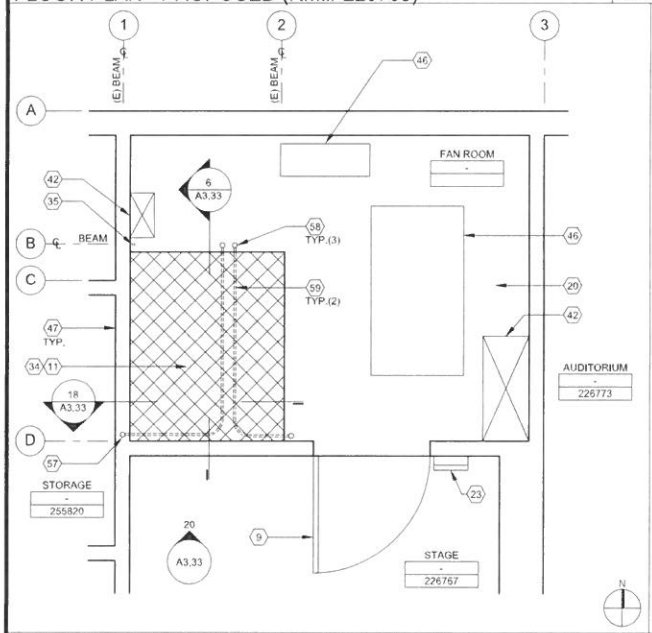

MULTI-PURPOSE BUILDING PLATFORM LIFT FAN ROOM FLOOR PLAN - PROPOSED | SCALE: 1/2"=1'-0" | 20

MODERNIZATION KEYNOTES:

1. LOWER LANDING LIFT CALL BUTTON (SEE 6/A3.35 & SEE ELEC DWGS)
2. (E) DOOR & FRAME TO BE PATCHED, SANDED & RE-PAINTED ON BOTH SIDES AFTER REMOVAL OF KICK-DOWN HOLD-OPEN DEVICE AND AUTOMATIC CLOSER
3. FIXED PLATFORM LIFT: ASCENSION PROTEGE 5442FG (SEE 1/A3.34, 3/A3.34, 4/A3.34, 1/A3.35, & 4/A3.35)
4. 5'-0" X 5'-0" LEVEL LANDING
5. (E) WOOD STEPS
6. (E) STAGE PLATFORM
7. (E) SURFACE MOUNTED ELEC. JUNCTION BOX AND WIREMOLD RELOCATED (SEE ELEC. DWGS.)
8. SIGN STATING "NO FREIGHT" AND INCLUDING THE ISA TO BE POSTED AT EA. LANDING & WITHIN PLATFORM ENCLOSURE (SEE 18/A9.11 & 5/A9.9))
9. (E) DOOR, FRAME, & HARDWARE
10. LOCKSET TO BE REPLACED (SEE DOOR SCHEDULE A0.1)
11. PAINTED PLYWOOD (SEE STRUCT. DWGS.)
12. EMERGENCY BATTERY BACKUP MOUNTED ON SHELF (SEE 13/A3.34)
13. CABINET FOR STORING MANUALS & LOGBOOK (SEE DETAIL 13/A3.34)
14. UPPER LANDING LIFT GATE W/ INTEGRAL LIFT CALL BUTTON (SEE 6/A3.34 & 5/A3.35)
15. REFLECTIVE RED PAINTED 2" WIDE SAFETY LINE, 3" AWAY FROM CHAIRLIFT ON ALL OPEN SIDES. (SEE SPEC 144219.3.02 D)
16. DISCONNECT SWITCH W/ A PERMANENT SIGN NEXT TO IT (SEE DETAIL 13/A3.34 & SEE ELEC DWGS)
17. CERTIFICATE FRAME MOUNTED TO INSIDE OF PLATFORM LIFT W/ 3M VHB TAPE FOR POSTING STATE ISSUED OPERATING PERMIT (SEE SPEC. SECTION 144219.3.02 E)
18. 30"X 48" CLEAR FLR SPACE FOR UPPER & LOWER LANDING CALL BUTTON
19. VERTICAL LIFT SIGN W/O THE DIRECTIONAL ARROW SYMBOL (SEE 19/A9.4)
20. (E) 2" CONCRETE TOPPING
21. ROOM I.D. SIGN (SEE 9/A9.11)
22. (E) 80" HIGH BUILT-IN CASEWORK
23. (E) LADDER
24. (E) ELECTRICAL PANEL
25. (E) PA SPEAKER
26. (E) BOILER CONTROL
27. (E) FIRE ALARM PULL STATION, & HORN-STROBE
28. 54"W X 48"D MIN. MANEUVERING CLEARANCE ON PUSH SIDE OF DOOR
29. 60"W X 60"D MIN. MANEUVERING CLEARANCE ON PULL SIDE OF DOOR
30. VCT FLOOR TILE TO BE REPLACED TO MATCH EXISTING (SEE A0.2)
31. (E) VCT FLOOR TILE
32. (E) HARDWOOD FLOORING
33. FLUSH WOOD THRESHOLD TO MATCH (E) HARDWOOD FLOORING (SEE A0.2)
34. 2X FLOOR JOISTS @ 16" O.C. (SEE STRUCT. DWGS.)
35. (E) ELEC. CONDUIT RELOCATED
36. (E) GLUED-ON ACOUSTICAL CEILING TILES OVER LATH & PLASTER
37. (E) SMOKE DETECTOR RELOCATED
38. (E) SURFACE-MOUNTED ELECTRICAL WIREMOLD
39. (E) LIGHT FIXTURE
40. (E) MANUAL FIRE ALARM PULL STATION
41. (E) EXPOSED PLUMBING WASTE PIPE
42. (E) S.M. DUCT
43. (E) JAMB POST
44. LATH & PLASTER TO MATCH EXISTING
45. GYPSUM BOARD, PAINTED
46. ALL (E) MECH. EQUIPMENT, PIPING, & DUCTWORK TO BE PROTECTED IN PLACE
47. (E) WALL
48. (E) HVAC WALL REGISTER
49. (E) CONC. SLAB ON GRADE (SEE STRUCT. DWGS.)
50. CONC. SLAB ON GRADE (SEE STRUCT. DWGS.)

SEE 2/- FOR CONTINUATION OF KEYNOTES

MODERNIZATION KEYNOTES | SCALE: N.T.S. | 12

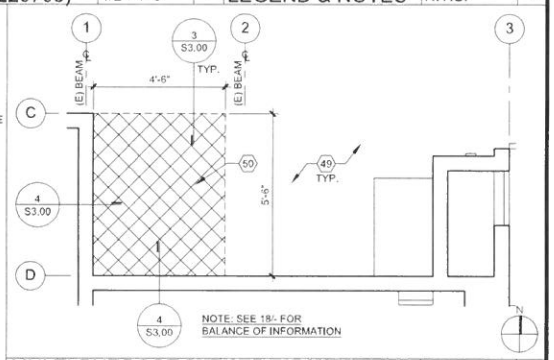

MULTI-PURPOSE BLDG. PLATFORM LIFT PARTIAL FLOOR PLAN - PROPOSED | SCALE: 1/2" = 1'-0" | 3

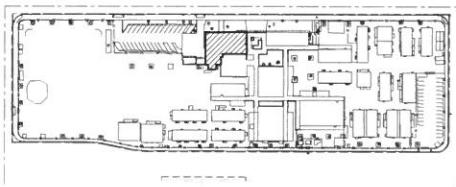

KEY PLAN | SCALE: N.T.S. | 4

DIVISION OF THE STATE ARCHITECT

DSA APP # 03-XXXXXX

LOS ANGELES UNIFIED SCHOOL DISTRICT

ASSET MANAGEMENT FACILITIES SERVICES DIVISION
333 S. BEAUDRY AVENUE, 23RD FLOOR
LOS ANGELES, CALIFORNIA 90017

PROJECT TITLE AND SCHOOL LOCATION

BASSETT STREET ELEMENTARY SCHOOL
15756 BASSETT ST
LAKE BALBOA, CA 91406

VOLUNTARY BARRIER REMOVAL

COLIN NO: 10373370

COMMISSIONED ARCHITECT

Swift Lee Office
1231 N Spring St, Suite B-203
Los Angeles, CA 90012
T. 323.257.8200
www.swiftleeoffice.com

CONSULTANT

STAMPS/SEALS:

LICENSED ARCHITECT NATHAN A SWIFT C-28798 03-31-25 RENEWAL DATE STATE OF CALIFORNIA

△ 50% CD	12.20.23
△ 50% CD (PLATFORM LIFT)	02.23.24
△ 100% CD	06.03.24
△	

SHEET TITLE

MULTI-PURPOSE BUILDING PLATFORM LIFT FLOOR PLANS - PROPOSED

PROJECT NO.: | PROJECT ARCH.
DRAWN: | CHECKED:

SHEET NUMBER

A3.32

DATE | SHEET | OF

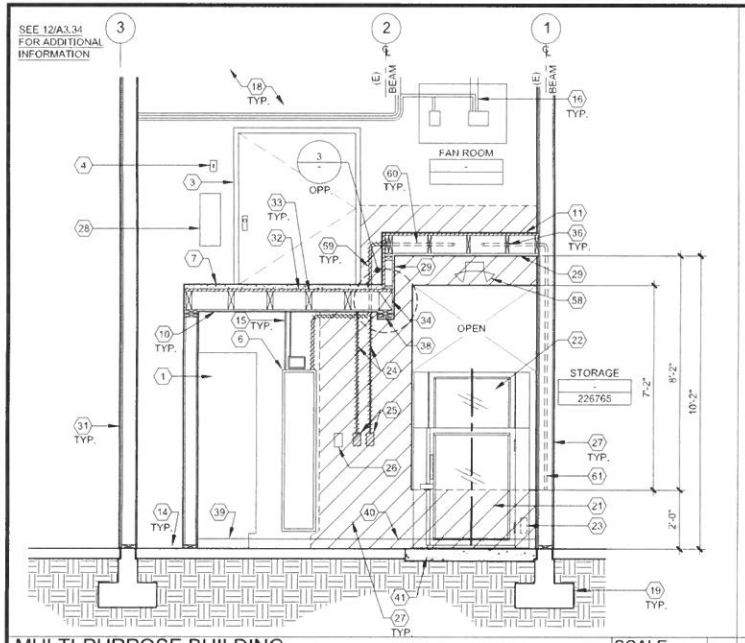

MULTI-PURPOSE BUILDING PLATFORM LIFT SECTION - PROPOSED | SCALE: 1/2"=1'-0" | 18

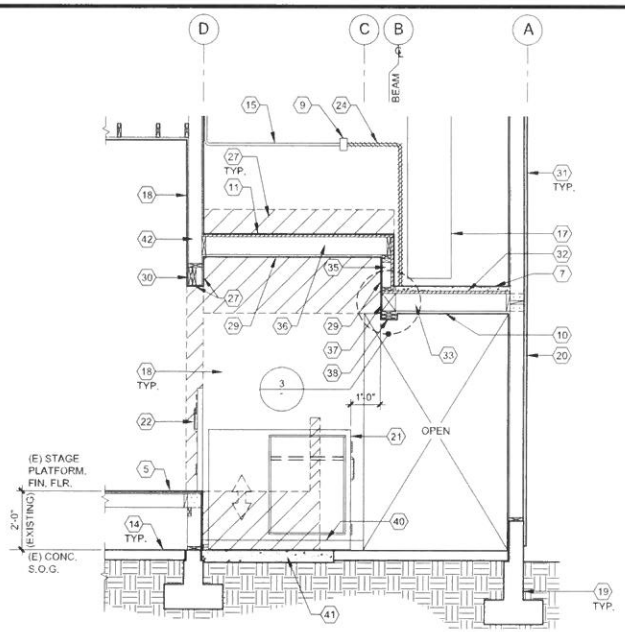

MULTI-PURPOSE BUILDING PLATFORM LIFT SECTION - PROPOSED | SCALE: 1/2"=1'-0" | 6

MODERNIZATION LEGEND:

- EXISTING
- FINISH TO BE REPLACED
- CONC. SLAB ON GRADE TO BE REPLACED (SEE STRUCT. DWGS.)
- PROPOSED SURFACE-MOUNTED WIREMOLD/ CONDUIT (OR EXISTING RELOCATED) (SEE ELEC. DWGS.)

FLOOR PLAN NOTES:

1. (E) WALL, FLOOR & CEILING FINISH TO BE PATCHED/ REPAIRED OR REPLACED TO MATCH SURROUNDING @ LOCATION OF ALTERATIONS.
2. FOR (E) WALL TYPE DESIGNATIONS REFER TO DEMO. PLANS. FOR PROPOSED WALL TYPE DESIGNATIONS REFER TO PROPOSED FLR PLANS. FOR (E) WALL TYPE DETAILS REFER TO A9.1 & PROPOSED WALL TYPE DETAILS REFER TO A9.2.

MODERNIZATION NOTES | SCALE: N.T.S. | 2

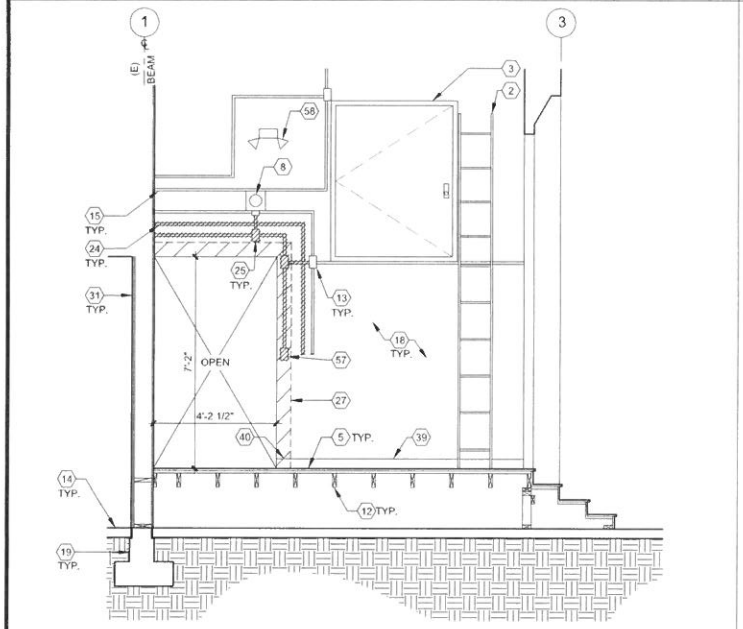

NORTH INT. ELEVATION @ STAGE - PROPOSED | SCALE: 1/2"=1'-0" | 20

SECTION KEYNOTES:

1. (E) 80" HIGH BUILT-IN CASEWORK
2. (E) LADDER
3. (E) DOOR, FRAME & HARDWARE
4. (E) ELECTRICAL SWITCH
5. (E) HARDWOOD FLOORING @ STAGE
6. (E) ELEC. PANEL
7. (E) 2" CONCRETE TOPPING
8. (E) PA SPEAKER
9. (E) SURFACE-MOUNTED ELEC. JUNCTION BOX (SEE ELEC. DWGS.)
10. (E) GLUED-ON ACOUSTICAL CEILING TILES OVER LATH & PLASTER
11. PLYWOOD, PAINTED (SEE STRUCT. DWGS.)
12. (E) 2X6 FLOOR JOIST @ 16" O.C.
13. (E) SURFACE-MOUNTED ELEC. JUNCTION BOX
14. (E) 4" CONCRETE SLAB ON GRADE
15. (E) SURFACE-MOUNTED ELECTRICAL WIREMOLD/ CONDUIT (SEE ELEC. DWGS.)
16. (E) PRESSURE GAUGES & COPPER PIPING
17. (E) S.M. DUCT
18. (E) LATH & PLASTER WALL FINISH TO BE PAINTED
19. (E) CONT. CONCRETE FOOTING
20. (E) EXT. CEMENT PLASTER FINISH
21. PLATFORM LIFT (SEE 12/A3.32 KEYNOTE 3)
22. UPPER LANDING LIFT GATE
23. FRONT LOWERING VALVE ACCESS PANEL
24. (E) SURFACE-MOUNTED ELECTRICAL WIREMOLD/ CONDUIT RELOCATED (SEE ELEC. DWGS.)
25. (E) SURFACE-MOUNTED ELECTRICAL JUCTION BOX RELOCATED (SEE ELEC. DWGS.)
26. LOWER LANDING LIFT CALL BUTTON
27. LATH & PLASTER WALL FINISH TO MATCH EXISTING, PAINTED
28. (E) FIRE EXTINGUISHER
29. GYPSUM BOARD, PAINTED
30. (E) DOUBLE 2X8 HEADER (SEE STRUCT. DWGS.)
31. (E) WALL
32. (E) 1X6 DIAGONAL WOOD SHEATHING
33. (E) 3X8 FLOOR JOIST @ 16" O.C.
34. (E) 6X8 BEAM
35. 2X WOOD STUD @ 16" O.C. (SEE STRUCT. DWGS.)
36. 2X FLOOR JOIST @ 16" O.C. (SEE STRUCT. DWGS.)
37. WOOD BEAM (SEE STRUCT. DWGS.)
38. CONTINUOUS DOUBLE 2X6 NAILER
39. (E) WOOD BASE
40. WOOD BASE TO BE REPLACED TO MATCH EXISTING
41. CONC. SLAB ON GRADE (SEE STRUCT. DWGS.)
42. (E) 2X WOOD STUDS @ 16" O.C.
43. 2X WOOD STUD @ 16" O.C.
44. 2X WOOD BLOCKING
45. 2X WOOD SILL PLATE
46. 6X8 WOOD BEAM
47. CONT. DOUBLE 2X6 NAILER
48. 5/8" TYPE X GYPSUM BOARD, PAINTED
49. PLYWOOD, PAINTED
50. (E) 2" CONC. TOPPING
51. (E) DIAG. 1X6 WOOD SHEATHING
52. JOIST HANGER
53. (E) 3X8 WOOD JOIST @ 16" O.C.
54. (E) LATH & PLASTER
55. (E) GLUED-ON ACOUSTICAL CEILING TILE
56. GLUED-ON ACOUSTICAL CEILING TILE TO MATCH EXISTING
57. (E) ELECTRICAL SWITCH RELOCATED
58. EMERGENCY LIGHT W/ BATTERY BACK-UP (SEE ELEC. DWGS.)
59. SURFACE-MOUNTED ELEC. CONDUIT (SEE ELEC. DWGS.)
60. ELEC. CONDUIT CONCEALED IN FLOOR JOISTS (SEE ELEC. DWGS.)
61. ELEC. CONDUIT CONCEALED IN WALL (SEE ELEC. DWGS.)

MODERNIZATION KEYNOTES | SCALE: N.T.S. | 12

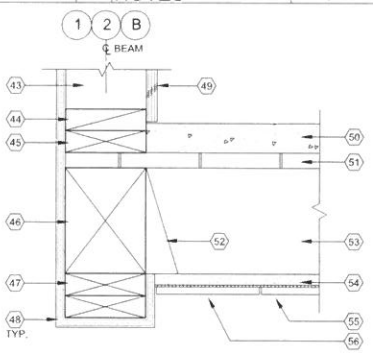

CEILING DETAIL | SCALE: 3" = 1'-0" | 3

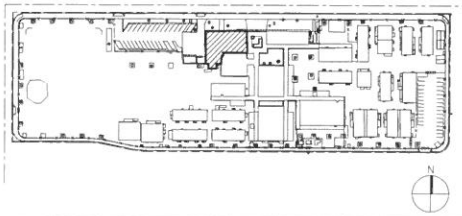

KEY PLAN | SCALE: N.T.S. | 4

DIVISION OF THE STATE ARCHITECT

DSA APP # 03-XXXXXX

LOS ANGELES UNIFIED SCHOOL DISTRICT

ASSET MANAGEMENT FACILITIES SERVICES DIVISION
333 S. BEAUDRY AVENUE, 23RD FLOOR
LOS ANGELES, CALIFORNIA 90017

PROJECT TITLE AND SCHOOL LOCATION

BASSETT STREET ELEMENTARY SCHOOL
15756 BASSETT ST
LAKE BALBOA, CA 91406

VOLUNTARY BARRIER REMOVAL

COLIN NO: 10373370

COMMISSIONED ARCHITECT

Swift Lee Office
1231 N Spring St, Suite B-203
Los Angeles, CA 90012
T. 323.257.8200
www.swiftleeoffice.com

CONSULTANT

STAMPS/SEALS

LICENSED ARCHITECT NATHAN A. SWIFT C-28798 03-31-25 RENEWAL DATE STATE OF CALIFORNIA

50% CD	12.20.23
50% CD (PLATFORM LIFT)	02.23.24
100% CD	06.03.24

SHEET TITLE: MULTI-PURPOSE BUILDING PLATFORM LIFT SECTIONS - PROPOSED

PROJECT NO.: | PROJECT ARCH.
DRAWN: | CHECKED:

SHEET NUMBER: A3.33

DATE | SHEET OF

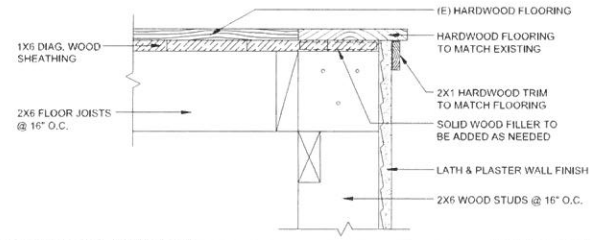

STAGE TO PLATFORM THRESHOLD DETAIL — SCALE: 1/2" = 1'-0" — 11

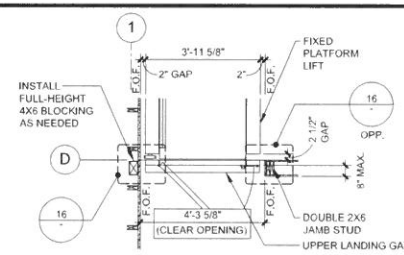

UPPER LANDING GATE DETAIL - PLAN — SCALE: 1/2" = 1'-0" — 6

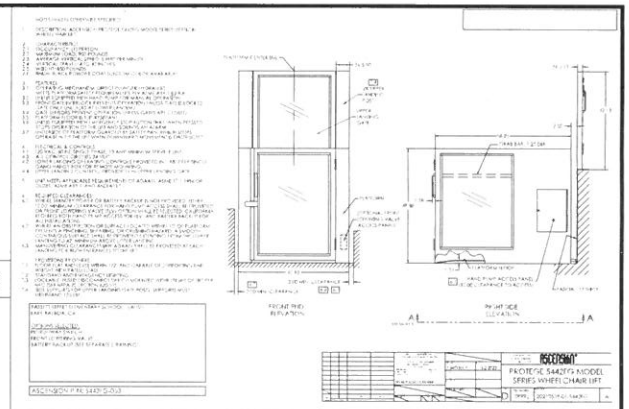

MANUF. DATA: ELEVATION VIEWS — SCALE: N.T.S. — 1

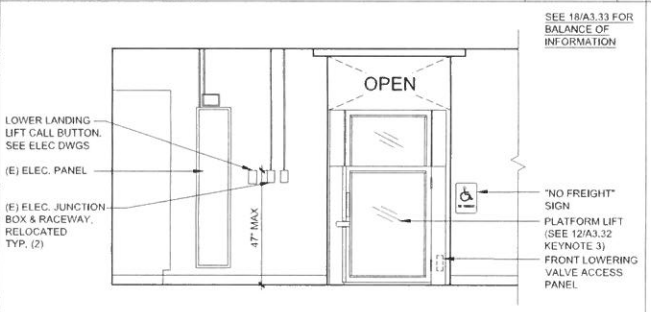

PARTIAL INTERIOR ELEVATION - SOUTH — SCALE: 1/2" = 1'-0" — 12

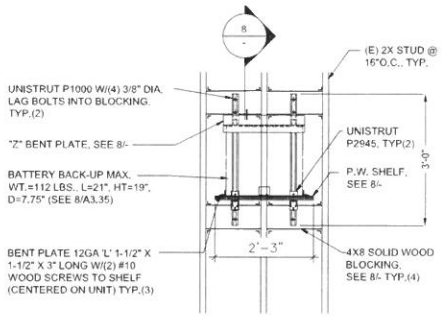

NOTES:

1. SHELF ASSEMBLY TO BE FINISHED AS FOLLOWS:

DESCRIPTION	FINISH	COLOR
PLYWOOD SHELF	PAINTED (SEMI-GLOSS)	MATCH ADJACENT WALL COLOR
UNISTRUT	PAINTED (SEMI-GLOSS)	MATCH ADJACENT WALL COLOR
"Z" BENT PLATE	PAINTED (MATTE)	BLACK
"L" BENT PLATE	PAINTED (MATTE)	BLACK

BATTERY MOUNTING DETAIL - FRONT — SCALE: 3/4" = 1'-0" — 7

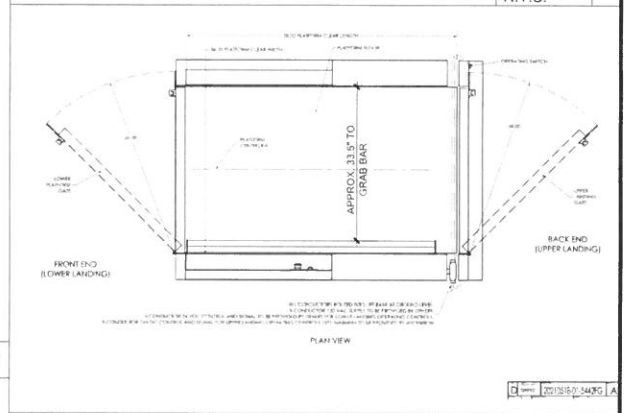

MANUF. DATA: PLAN VIEW — SCALE: N.T.S. — 3

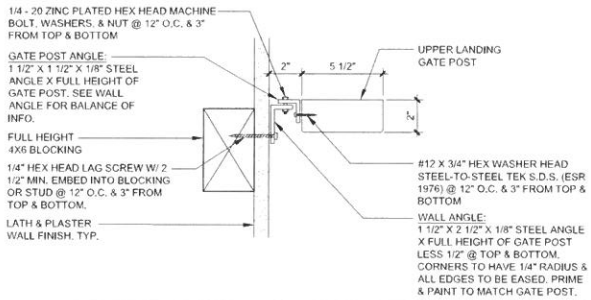

UPPER LANDING GATE DETAIL — SCALE: 3" = 1'-0" — 16

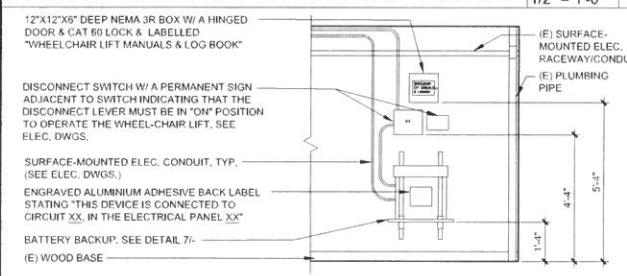

PARTIAL INTERIOR ELEVATION - NORTH — SCALE: 1/2" = 1'-0" — 13

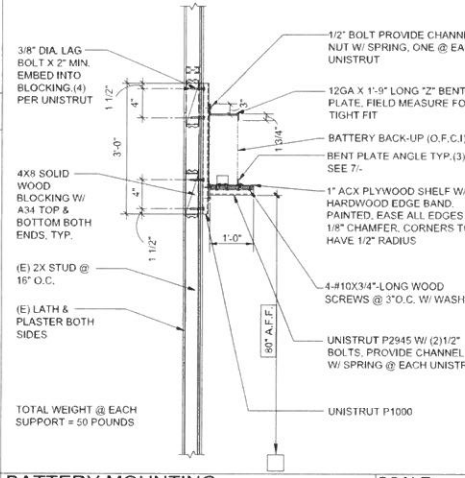

BATTERY MOUNTING DETAIL - SIDE — SCALE: 3/4" = 1'-0" — 8

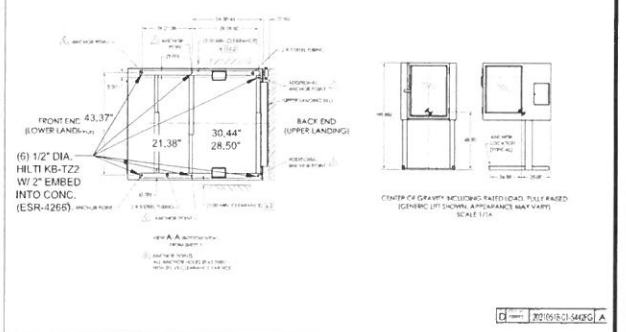

MANUF. DATA: ANCHOR POINTS & CENTER OF GRAVITY DIAGRAM — SCALE: N.T.S. — 4

DIVISION OF THE STATE ARCHITECT

DSA APP # 03-XXXXXX

LOS ANGELES UNIFIED SCHOOL DISTRICT

ASSET MANAGEMENT FACILITIES SERVICES DIVISION
333 S. BEAUDRY AVENUE, 23RD FLOOR
LOS ANGELES, CALIFORNIA 90017

PROJECT TITLE AND SCHOOL LOCATION

BASSETT STREET ELEMENTARY SCHOOL
15756 BASSETT ST
LAKE BALBOA, CA 91406

VOLUNTARY BARRIER REMOVAL

COLIN NO: 10373370

COMMISSIONED ARCHITECT

Swift Lee Office
1231 N Spring St, Suite B-203
Los Angeles, CA 90012
T: 323.257.8200
www.swiftleeoffice.com

CONSULTANT

STAMPS/SEALS

LICENSED ARCHITECT NATHAN A. SWIFT C-28798 03-31-25 RENEWAL DATE STATE OF CALIFORNIA

50% CD	12.20.23
50% CD (PLATFORM LIFT)	02.23.24
100% CD	06.03.24

SHEET TITLE: MULTI-PURPOSE BUILDING PLATFORM LIFT DETAILS

PROJECT NO.: | PROJECT ARCH.
DRAWN: | CHECKED:
SHEET NUMBER: A3.34
DATE | SHEET OF

NOTES UNLESS OTHERWISE SPECIFIED:

1. DESCRIPTION: UPPER LANDING GATE (ULG) WITH INTERLOCK.
   ("RH" HANDING GENERICALLY SHOWN. MAY NOT BE SAME AS SPECIFIED ON LIFT. MIRROR FOR "LH" HANDING).
2. GATE FRAME MUST BE ANCHORED TO LANDING SILL USING ANCHOR HOLES SHOWN. ANCHORS TO BE PROVIDED BY OTHERS.
3. GATE FRAME MUST BE ATTACHED TO NEARBY WALLS/RAILINGS TO ENSURE FULL STRENGTH AND RIGIDITY. FASTENING MEANS TO BE PROVIDED BY OTHERS.
4. ASSEMBLY INCLUDES:
   (FRAME MOUNTED OPERATING STATION

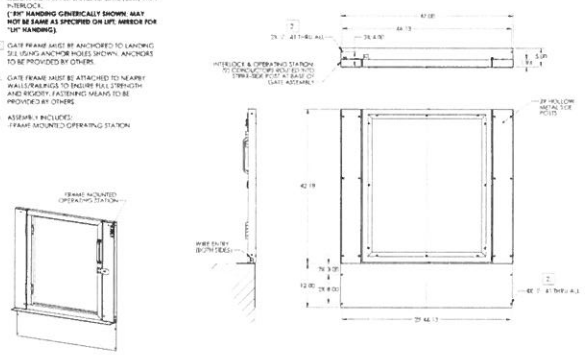

MANUF. DATA: UPPER LANDING GATE

SCALE: N.T.S. | 5

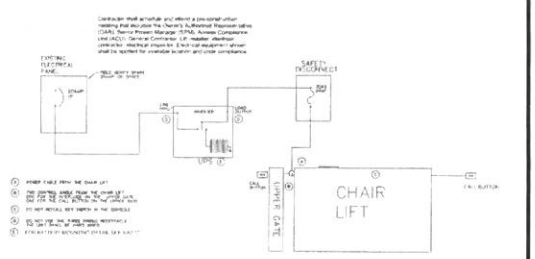

PLATFORM LIFT: ELEC. SINGLE LINE DIAGRAM

SCALE: N.T.S. | 1

NOTES UNLESS OTHERWISE SPECIFIED:

1. DESCRIPTION: REMOTELY LOCATED CALL STATION FOR ASCENSION VERTICAL PLATFORM WHEELCHAIR LIFT
2. CHARACTERISTICS
   2.1 COVER PLATE: STANDARD SIZE WALL PLATE (4.5" X 2.75") BRUSHED STAINLESS STEEL
   2.2 SWITCH: 3 POSITION ROCKER, REQUIRES CONSTANT PRESSURE TO ACTIVATE
   2.3 MOUNTING BOX: SURFACE MOUNT SINGLE GANG HANDY BOX, 3.08" DEEP.
   2.4 WEATHER RATING: SUITABLE FOR OUTDOOR USE

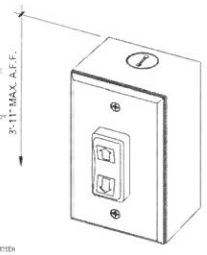

WIRING:
- DOWN SIGNAL (TO LIFT)
- +V (FROM LIFT)
- UP SIGNAL (TO LIFT)

(3) 1/4" QUICK-DISCONNECT TERMINALS (PROVIDED)

		OGM CONTAINER CONTROLS, INC.	
		OPERATING STATION (CALL BOX) WALL MOUNTED	
		B 08992	115712 B

MANUF. DATA: CALL BUTTON

SCALE: N.T.S. | 6

NOTES UNLESS OTHERWISE SPECIFIED:

1. DESCRIPTION: BATTERY BACKUP FOR ASCENSION LIFT.
2. OPERATION:
   2.1 FOR USE WITH ASCENSION VIRTUOSO AND PROTEGE MODEL WHEELCHAIR LIFTS.
   2.2 PROVIDES STANDBY POWER FOR MINIMUM OF 5 FULL LIFTING CYCLES CARRYING LIFT'S RATED LOAD.
   2.3 FOR INDOOR USE ONLY.
3. PHYSICAL CHARACTERISTICS:
   3.1 MATERIAL: SEED ENCLOSURE WITH PLASTIC TRIM
   3.2 FINISH: POWDER COATED, BLACK
   3.3 WEIGHT: 112 LBS.
4. SPECIFICATIONS:
   4.1 INPUT: 120VAC, 20A, HARDWIRED
   4.2 OUTPUT: 120VAC, 20A, HARDWIRED
   4.3 BATTERY: SEALED LEAD ACID
5. BACKUP UNIT SHALL BE WIRED TO MAIN DISCONNECT SWITCH (BY OTHERS) SO THAT ASCENSION DISCONNECTS BOTH INPUT AND OUTPUT POWER FROM THE BACKUP UNIT.
6. UNIT SUPPLIED WITH HARDWIRING KIT. UNIT SHIPS WITH CORD, PLUG, AND OUTPUT RECEPTACLES WHICH ARE REMOVED WHEN HARDWIRED IN FIELD.
7. BACKUP UNIT SHALL BE INSTALLED SUCH THAT UNIT'S INTERNAL FAN WILL BE ABLE TO DISSIPATE HEAT GENERATED BY UNIT. IF TO BE INSTALLED IN CONFINED SPACE, ASCENSION RECOMMENDS NO LESS THAN 30 IN² OPEN VENT AREA.

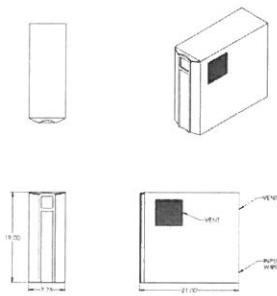

		ASCENSION	
		ASCENSION BATTERY BACKUP WITH HARDWIRE KIT	
		D 08992	116101 A

MANUF. DATA: BACKUP BATTERY

SCALE: N.T.S. | 8

PLATFORM LIFT NOTES:

1. THE BASIS OF DESIGN FOR THE PLATFORM LIFT SHALL BE THE FOLLOWING, OR EQUAL :

a. MANUF :	ASCENSION
b. MODEL :	PROTEGE 5442FG
c. TYPE :	FIXED
d. BATTERY BACK-UP :	YES
e. WALL-MOUNTED CALL BUTTON @ LOWER LANDING :	YES
f. AUTOMATIC OPENER AT LOWER PLATFORM GATE :	NO
g. FRONT LOWERING VALVE AND ACCESS PANEL :	YES
h. GATE HINGE CONFIGURATION:	ALL GATES STANDARD HINGED
i. UPPER LANDING GATE:	YES

2. ABUSE RESISTANT GYPSUM BOARD TO BE USG FIBEROCK OR EQUAL.
3. PLATFORM LIFT ELECTRICAL REQUIREMENTS: ALL CONDUCTORS ROUTED INTO BASE @ GROUND LEVEL. 3-CONDUCTOR 120 VAC SUPPLY TO BE PROVIDED BY CONTRACTOR 3-CONDUCTOR 24 VDC CONTROL & SIGNAL TO BE PROVIDED BY CONTRACTOR FOR LOWER LANDING OPERATING CONTROLS. 9-CONDUCTOR 24 VDC CONTROL & SIGNAL FOR UPPER LANDING OPERATING CONTROLS. 12"-0" MIN. TO BE PROVIDED BY LIFT MANUFACTURER. SEE ELEC. DWGS. FOR ADDITIONAL INFORMATION. SEE 1/- FOR PLATFORM LIFT ELECTRICAL LINE DRAWING.
4. 11B- 410.1 GENERAL. PLATFORM LIFTS SHALL COMPLY W/ ASME A18.1. PLATFORM LIFTS SHALL NOT BE ATTENDNT-OPERATED & SHALL PROVIDE UNASSISTED ENTRY & EXIT FROM THE LIFT.
5. 11B-410.3 CLEAR FLOOR SPACE CLEAR FLOOR SPACE IN PLATFORM LIFTS SHALL COMPLY W/ SECTION 11B-305.
6. 11B-410.4 PLATFORM TO RUNWAY CLEARANCE. THE CLEARANCE BETWEEN THE PLATFORM SILL & THE EDGE OF ANY RUNWAY LANDING SHALL BE 1 1/4" (32MM) MAX.
7. 11B-410.5 OPERABLE PARTS. CONTROLS FOR PLATFORM LIFTS SHALL COMPLY W/ SECTION 11B-309.
8. 11B-410.6 DOORS AND GATES. PLATFORM LIFTS SHALL HAVE LOW-ENERGY POWER-OPERATED DOORS OR GATES COMPLYING W/ SECTION 11B-404.3. DOORS SHALL REMAIN OPEN FOR 20 SECONDS MIN. END DOORS & GATES SHALL PROVIDE A CLEAR WIDTH 32" (813 MM) MIN. SIDE DOORS & GATES SHALL PROVIDE A CLEAR WIDTH 42"(1067 MM) MIN.
9. EXCEPTION: PLATFORM LIFTS SERVING TWO LANDINGS MAX. & HAVING DOORS & GATES ON OPPOSITE SIDES SHALL BE PERMITTED TO HAVE SELF-CLOSING MANUAL DOORS OR GATES.
10. 11B-410.7 LANDING SIZE. THE MIN. SIZE OF LANDINGS @ PLATFORM LIFTS SHALL BE 60" BY 60" (1524 MM BY 1524MM) W/ 1.5% MAX. SLOPE IN ALL DIRECTIONS.
11. 11B-410.8 RESTRICTION SIGN. A SIGN COMPLYING W/ SECTION 11B-703.5 SHALL BE POSTED IN A CONSPICUOUS PLACE @ EACH LANDING & WITHIN THE PLATFORM ENCLOSURE STATING "NO FREIGHT" & INCLUDE THE INTERNATIONAL SYMBOL OF ACCESSIBILITY COMPLYING W/ SECTION 11B-703.7.2.1.
12. LIFT CALL BUTTON SHALL BE PROVIDED W/ A 30" X 48" CLEAR FLOOR SPACE LOCATED OUTSIDE OF THE ARC OF THE SWING OF THE LIFT DOOR.
13. MOUNTING HEIGHT OF LIFT CALL BUTTON SHALL BE BETWEEN 48" MAX. MEASURED TO THE TOP OF THE OUTLET BOX & 15" MIN. MEASURED TO THE BOTTOM OF THE OUTLET BOX.
14. PASSENGER CONTROL STATION INSIDE PLATFORM LIFT SHALL NOT REQUIRE A KEY FOR OPERATION.
15. LIFT SHALL HAVE AN EMERGENCY PIT SWITCH FOR USE BY MAINTENANCE PERSONNEL (ROCKER SWITCH ON UNDERSIDE OF PLATFORM, RIGHT HAND CORNER).
16. PLATFORM LIFT SHALL BE PROVIDED WITH EMERGENCY LIGHTING AS FOLLOWS:
    a. LIGHT FIXTURE SHALL BE WALL-MOUNTED, 4-HOUR, W/ SELF-CONTAINED BATTERY PACK.
    b. THE LEVEL OF ILLUMINATION SHALL BE A MINIMUM OF 0.2 FOOT CANDLES (2.2 LUX) MEASURED AT THE FLOOR AND CONTROLS OF THE LIFT AND SHALL BE MAINTAINED FOR A MINIMUM OF FOUR HOURS.
    c. MEANS OF EGRESS ILLUMINATION SHALL NOT BE LESS THAN 1 FOOT CANDLE (11 LUX) AT THE WALKING SURFACE FOR A DURATION OF NOT LESS THAN 90 MINS.

PLATFORM LIFT NOTES

SCALE: N.T.S. | 4

DIVISION OF THE STATE ARCHITECT

DSA APP # 03-XXXXXX

LOS ANGELES UNIFIED SCHOOL DISTRICT

ASSET MANAGEMENT FACILITIES SERVICES DIVISION
333 S. BEAUDRY AVENUE, 23RD FLOOR
LOS ANGELES, CALIFORNIA 90017

PROJECT TITLE AND SCHOOL LOCATION

BASSETT STREET ELEMENTARY SCHOOL
15755 BASSETT ST
LAKE BALBOA, CA 91406

VOLUNTARY BARRIER REMOVAL

COLIN NO: 10373370

COMMISSIONED ARCHITECT

Swift Lee Office
1231 N Spring St, Suite B-203
Los Angeles, CA 90012
T. 323.257.8200
www.swiftleeoffice.com

CONSULTANT

STAMPS/SEALS

LICENSED ARCHITECT
NATHAN A. SWIFT
C-28798
03-31-25
RENEWAL DATE
STATE OF CALIFORNIA

△ 50% CD	12.20.23
△ 50% CD (PLATFORM LIFT)	02.23.24
△ 100% CD	06.03.24
△	

SHEET TITLE:
MULTI-PURPOSE BUILDING PLATFORM LIFT DETAILS

PROJECT NO.: | PROJECT ARCH
DRAWN: | CHECKED:

SHEET NUMBER
A3.35

DATE | SHEET OF

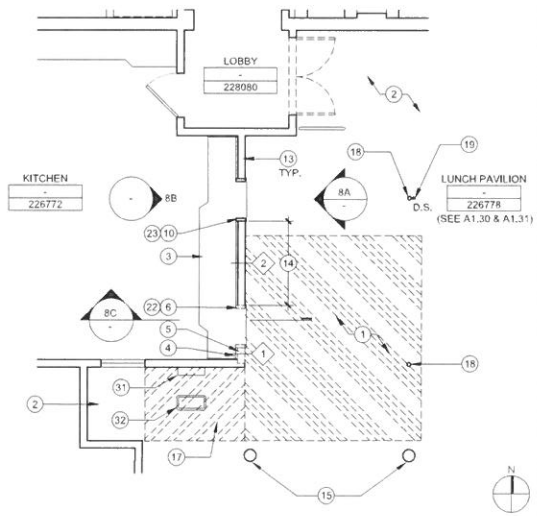

SERVING COUNTER PLAN - DEMO (RM.# 226772) | SCALE: 1/4"=1'-0" | 6

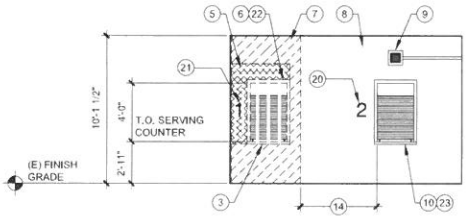

A EXTERIOR ELEVATION

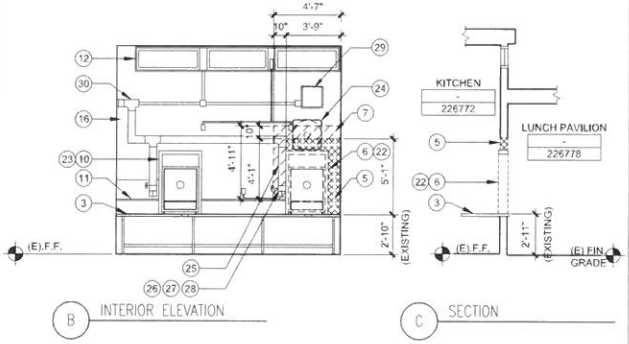

B INTERIOR ELEVATION

C SECTION

SERVING COUNTER ELEVATIONS - DEMO (RM.# 226772) | SCALE: 1/4"=1'-0" | 8

DEMOLITION KEYNOTES

1. CONCRETE PAVEMENT TO BE REMOVED (SEE C1.12)
2. CONCRETE PAVEMENT TO REMAIN
3. STAINLESS STEEL COUNTER TOP TO REMAIN
4. PORTION OF STAINLESS STEEL BACKSPLASH TO BE REMOVED
5. PORTION OF WALL TO BE REMOVED
6. STAINLESS STEEL ROLLING COUNTER DOOR & FRAME TO BE REMOVED
7. CEMENT PLASTER WALL FINISH AND LATH TO BE REMOVED. TAKE CARE TO NOT DEMOLISH OR DAMAGE EXISTING SHEAR WALL (SEE STRUCTURAL DRAWINGS)
8. CEMENT PLASTER WALL FINISH AND LATH TO REMAIN
9. SPEAKER TO REMAIN
10. STAINLESS STEEL ROLLING COUNTER DOOR & FRAME TO REMAIN
11. STAINLESS STEEL BACK SPLASH TO REMAIN
12. CLERESTORY WINDOW TO REMAIN
13. WALL TO REMAIN
14. SHEAR WALL TO REMAIN AND TO BE PROTECTED IN PLACE (SEE STRUCTURAL DRAWINGS)
15. 10" DIA. CONC. COLUMN TO REMAIN
16. LATH & PLASTER WALL FINISH TO REMAIN
17. AC PAVEMENT TO BE REMOVED (SEE C1.12)
18. 3 1/2" DIA. STEEL PIPE COLUMN & CONC. FOOTING TO REMAIN
19. DOWNSPOUT TO REMAIN
20. PAINTED NUMBER TO REMAIN
21. PAINTED NUMBER TO BE REMOVED
22. PASS-THROUGH CONVENIENCE WINDOW TO BE REMOVED
23. PASS-THROUGH CONVENIENCE WINDOW TO REMAIN
24. WALL-MOUNTED BOX FAN TO BE REMOVED & SAVED FOR RE-USE
25. SURFACE-MOUNTED ELECTRICAL WIREMOLD TO BE REMOVED & SAVED FOR RE-USE
26. SURFACE-MOUNTED ELECTRICAL RECEPTACLE TO BE REMOVED & SAVED FOR REUSE
27. SURFACE MOUNTED LIGHT SWITCH TO BE REMOVED & SAVED FOR REUSE
28. SURFACE MOUNTED DATAPORT TO BE REMOVED & SAVED FOR REUSE
29. SURFACE MOUNTED PULL-BOX TO REMAIN
30. SURFACE-MOUNTED ELECTRICAL WIREMOLD TO REMAIN
31. SURFACE-MOUNTED ELECTRICAL PANEL TO REMAIN
32. ELECTRICAL GROUND BOX TO REMAIN - ADJUST TO GRADE

DEMOLITION LEGEND:

- EXISTING TO REMAIN
- EXISTING TO BE REMOVED
- WALL TO BE REMOVED
- WALL TYPE (SEE NOTE 2)
- FINISH TO BE REMOVED
- AC PAVEMENT TO BE REMOVED
- CONCRETE PAVEMENT TO BE REMOVED

DEMOLITION NOTES:

1. (E) FIRE ALARM SYSTEM SHALL BE PROTECTED IN PLACE & SHALL REMAIN OPERATIONAL THROUGHOUT THE DURATION OF CONSTRUCTION
2. FOR DEMOLITION NOTES, SEE 3/T-3
3. FOR (E) WALL TYPE DESIGNATIONS REFER TO DEMO. PLANS. FOR PROPOSED WALL TYPE DESIGNATIONS REFER TO PROPOSED FLOOR PLANS. FOR (E) WALL TYPE DETAILS REFER TO A9.1 & PROPOSED WALL TYPE DETAILS REFER TO A9.2.
4. REFER TO CIVIL SHEET C1.12 FOR ADDITIONAL INFORMATION

NOTES | SCALE: N.T.S. | 3

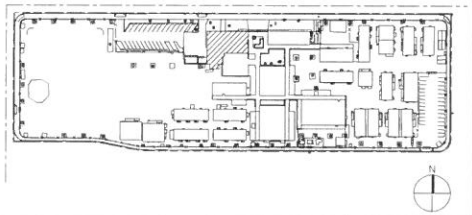

KEY PLAN | SCALE: N.T.S. | 4

DIVISION OF THE STATE ARCHITECT

DSA APP # 03-XXXXXX

LOS ANGELES UNIFIED SCHOOL DISTRICT

ASSET MANAGEMENT FACILITIES SERVICES DIVISION
333 S. BEAUDRY AVENUE, 23RD FLOOR
LOS ANGELES, CALIFORNIA 90017

PROJECT TITLE AND SCHOOL LOCATION

BASSETT STREET ELEMENTARY SCHOOL
15756 BASSETT ST
LAKE BALBOA, CA 91406

VOLUNTARY BARRIER REMOVAL

COLIN NO: 10373370

COMMISSIONED ARCHITECT

Swift Lee Office
1231 N Spring St, Suite B-203
Los Angeles, CA 90012
T: 323.257.8290
www.swiftleeoffice.com

CONSULTANT

STAMPS/SEALS

LICENSED ARCHITECT MATTHAN A. SWIFT C-28798 03-31-25 RENEWAL DATE STATE OF CALIFORNIA

50% CD	12.20.23
50% CD (PLATFORM LIFT)	02.23.24
100% CD	06.03.24

SHEET TITLE

MULTI-PURPOSE BUILDING SERVING COUNTER PLAN & ELEVATION DEMO

PROJECT NO.: | PROJECT ARCH.
DRAWN: | CHECKED:

SHEET NUMBER

A3.40

DATE | SHEET OF

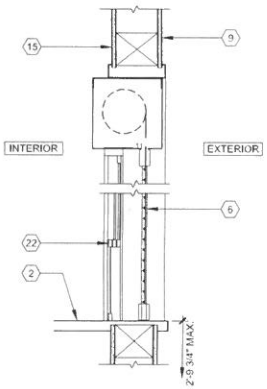

COILING COUNTER DOOR DETAIL — SCALE: 1 1/2"=1'-0" — 10

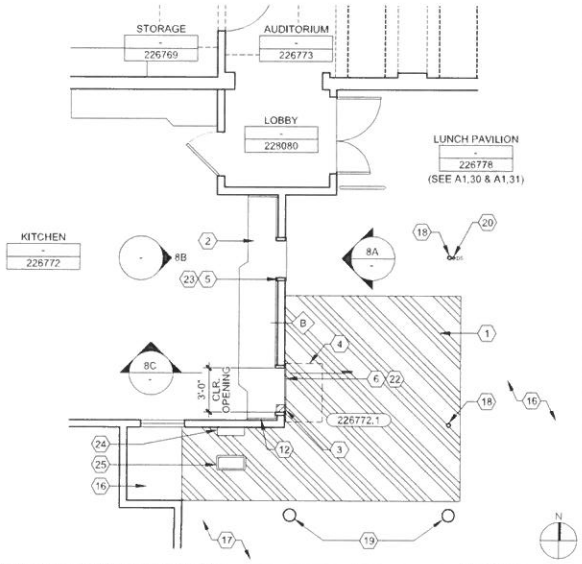

SERVING COUNTER PLAN - PROPOSED (RM.# 226772) — SCALE: 1/4"=1'-0" — 6

MODERNIZATION KEYNOTES

1. CONCRETE PAVEMENT (SEE C1.12)
2. (E) STAINLESS STEEL COUNTER TOP
3. STAINLESS STEEL COUNTER TOP TO MATCH EXISTING, WELD TO EXISTING, GRIND SMOOTH AND POLISH TO PROVIDE SEAMLESS TRANSITION.
4. 30"X48" CLEAR FLOOR SPACE FOR WHEEL-CHAIR FOR PARALLEL APPROACH. SURFACE SLOPE NOT TO EXCEED 1.5% IN ANY DIRECTION
5. (E) STAINLESS STEEL COILING COUNTER DOOR & FRAME
6. STAINLESS STEEL COILING COUNTER DOOR & FRAME
7. (E) LATH & PLASTER WALL FINISH
8. WALL TO BE PATCHED AND RE-PAINTED FROM CORNER TO CORNER AND FLOOR TO CEILING
9. CEMENT PLASTER WALL FINISH TO MATCH EXISTING
10. (E) SPEAKER
11. (E) STAINLESS STEEL BACKSPLASH
12. (E) STAINLESS STEEL BACKSPLASH TO BE MODIFIED TO FIT
13. (E) CLERESTORY WINDOW
14. (E) CEMENT PLASTER WALL FINISH
15. LATH & PLASTER WALL FINISH TO MATCH EXISTING
16. (E) CONCRETE PAVEMENT (SEE C1.12)
17. (E) A.C. PAVEMENT (SEE C1.12)
18. (E) 3 1/2" DIA. STEEL PIPE COLUMN
19. (E) 10" DIA. CONC. COLUMN
20. (E) DOWNSPOUT
21. WINDOW NUMBER TO BE REPAINTED TO MATCH EXISTING
22. PASS-THROUGH WINDOW WITH SPEAK-THRU SYSTEM TO MATCH EXISTING
23. (E) PASS-THROUGH WINDOW
24. (E) SURFACE-MOUNTED ELECTRICAL PANEL
25. (E) ELECTRICAL-GROUND BOX, ADJUST TO GRADE.
26. OPERABLE VERTICAL SLIDING SASH
27. (E) WALL-MOUNTED BOX FAN TO BE RE-INSTALLED
28. (E) SURFACE-MOUNTED ELEC. WIREMOLD TO BE RE-INSTALLED
29. (E) SURFACE-MOUNTED ELEC. RECEPTACLE TO BE RE-INSTALLED
30. (E) SURFACE-MOUNTED LIGHT SWITCH TO BE RE-INSTALLED
31. (E) SURFACE-MOUNTED DATA PORT TO BE RE-INSTALLED

MODERNIZATION NOTES:

1. (E) FIRE ALARM SYSTEM SHALL BE PROTECTED IN PLACE & SHALL REMAIN OPERATIONAL THROUGHOUT THE DURATION OF CONSTRUCTION
2. REFER TO CIVIL SHEET C1.12 FOR ADDITIONAL INFORMATION.

MODERNIZATION LEGEND:

- EXISTING
- CONC. PAVEMENT (SEE CIVIL DWGS.)
- FINISH TO BE REPLACED
- WALL TO BE REPLACED
- WALL TYPE (SEE 4/T-2 NOTE #5)

NOTES — SCALE: N.T.S. — 3

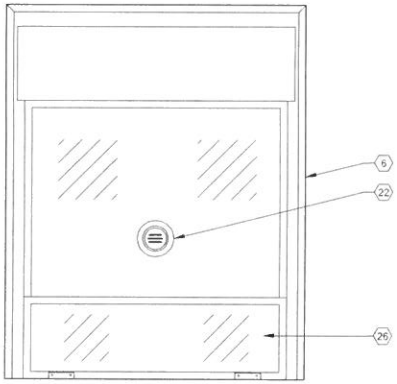

ROLLING SERVING COUNTER DOOR ELEVATION — SCALE: 1 1/2"=1'-0" — 16

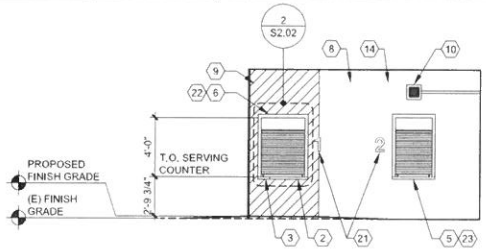

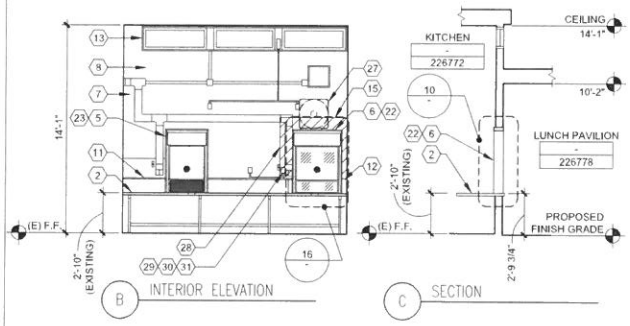

SERVING COUNTER ELEVATIONS - PROPOSED (RM.# 226772) — SCALE: 1/4"=1'-0" — 8

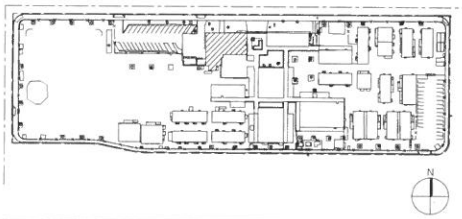

KEY PLAN — SCALE: N.T.S. — 4

DIVISION OF THE STATE ARCHITECT

DSA APP # 03-XXXXXX

LOS ANGELES UNIFIED SCHOOL DISTRICT

ASSET MANAGEMENT FACILITIES SERVICES DIVISION
333 S. BEAUDRY AVENUE, 23RD FLOOR
LOS ANGELES, CALIFORNIA 90017

PROJECT TITLE AND SCHOOL LOCATION

BASSETT STREET ELEMENTARY SCHOOL
15756 BASSETT ST
LAKE BALBOA, CA 91406

VOLUNTARY BARRIER REMOVAL

COLIN NO: 10373370

COMMISSIONED ARCHITECT

Swift Lee Office
1231 N Spring St, Suite B-203
Los Angeles, CA 90012
T. 323.257.8200
www.swiftleeoffice.com

CONSULTANT

STAMPS/SEALS

LICENSED ARCHITECT NATHAN A. SWIFT C-28798 03-31-25 RENEWAL DATE STATE OF CALIFORNIA

50% CD	12.20.23
50% CD (PLATFORM LIFT)	02.23.24
100% CD	06.03.24

SHEET TITLE:

MULTI-PURPOSE BUILDING SERVING COUNTER PLAN & ELEVATION PROPOSED

PROJECT NO.: PROJECT ARCH
DRAWN: CHECKED:
SHEET NUMBER

A3.41

DATE: SHEET: OF:

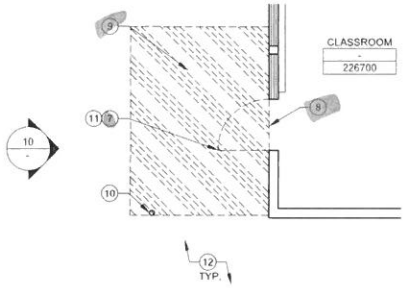

NOTE: SEE CIVIL SHEET C1.17 FOR ADDITIONAL INFORMATION.

BUILDING A CLASSROOM PLAN - DEMO (RM.# 226700) | SCALE: 1/4"=1'-0" | 9

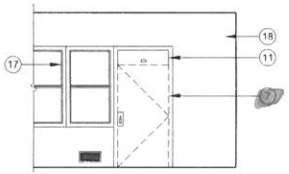

BUILDING A CLASSROOM ELEVATION - DEMO (RM.# 226700) | SCALE: 1/4"=1'-0" | 10

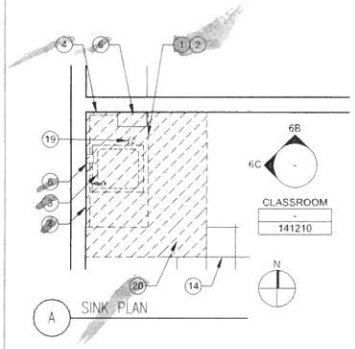

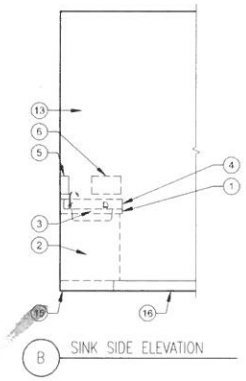

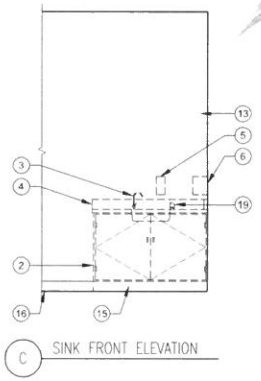

BUILDING AA-3495 SINK PLAN & ELEVATIONS - DEMO (RM.# 141210) | SCALE: 1/2" = 1'-0" | 6

DEMOLITION KEYNOTES:

1. COUNTER TOP TO BE REMOVED
2. BUILT-IN CABINET TO BE REMOVED
3. SINK & FAUCET TO BE REMOVED
4. BACK SPLASH TO BE REMOVED
5. SOAP DISPENSER TO BE REMOVED
6. PAPER TOWEL DISPENSER TO BE REMOVED
7. DOOR & HARDWARE TO BE REMOVED. FRAME TO REMAIN
8. DOOR THRESHOLD TO BE REMOVED
9. CONCRETE PAVEMENT TO BE REMOVED (SEE C1.17)
10. COLUMN TO REMAIN
11. FIXED TRANSOM PANEL TO REMAIN
12. CONC. PAVEMENT TO REMAIN
13. VINYL WALL COVERING TO REMAIN (SEE NOTE 4)
14. 12"X12" VCT FLOORING TO REMAIN
15. PORTION OF RUBBER BASE TO BE REMOVED
16. RUBBER BASE TO REMAIN
17. WINDOW TO REMAIN
18. CEMENT PLASTER WALL FINISH TO REMAIN
19. SINK BUBBLER TO BE REMOVED
20. 12"X12" VCT FLOORING TO BE REMOVED

DEMOLITION LEGEND:

- EXISTING TO REMAIN
- EXISTING TO BE REMOVED
- WALL TYPE (SEE NOTE 2)
- FINISH TO BE REMOVED
- CONCRETE PAVEMENT TO BE REMOVED

DEMOLITION NOTES:

1. (E) FIRE ALARM SYSTEM SHALL BE PROTECTED IN PLACE & SHALL REMAIN OPERATIONAL THROUGHOUT THE DURATION OF CONSTRUCTION
2. FOR DEMOLITION NOTES, SEE 3/T.3
3. FOR (E) WALL TYPE DESIGNATIONS REFER TO DEMO. PLANS. FOR PROPOSED WALL TYPE DESIGNATIONS REFER TO PROPOSED FLOOR PLANS. FOR (E) WALL TYPE DETAILS REFER TO A9.1 & PROPOSED WALL TYPE DETAILS REFER TO A9.2.
4. TAKE CARE NOT TO DAMAGE EXISTING VINYL WALL COVERING.

NOTES | SCALE: N.T.S. | 3

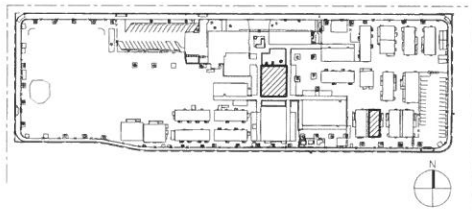

KEY PLAN | SCALE: N.T.S. | 4

DIVISION OF THE STATE ARCHITECT

DSA APP # 03-XXXXXX

LOS ANGELES UNIFIED SCHOOL DISTRICT

ASSET MANAGEMENT FACILITIES SERVICES DIVISION
333 S. BEAUDRY AVENUE, 23RD FLOOR
LOS ANGELES, CALIFORNIA 90017

PROJECT TITLE AND SCHOOL LOCATION

BASSETT STREET ELEMENTARY SCHOOL
15756 BASSETT ST
LAKE BALBOA, CA 91406

VOLUNTARY BARRIER REMOVAL

COLIN NO: 10373370

COMMISSIONED ARCHITECT

Swift Lee Office
1231 N Spring St. Suite B-203
Los Angeles, CA 90012
T. 323.257.8200
www.swiftleeoffice.com

CONSULTANT

STAMPS/SEALS

LICENSED ARCHITECT NAHAN A SWIFT C-28798 03-31-25 RENEWAL DATE STATE OF CALIFORNIA

50% CD	12.20.23
50% CD (PLATFORM LIFT)	02.23.24
100% CD	06.03.24

SHEET TITLE

AA-3495 & BLDG. A PLANS & ELEVATIONS DEMO

PROJECT NO.: | PROJECT ARCH:
DRAWN: | CHECKED:

SHEET NUMBER

A6.20

DATE | SHEET OF

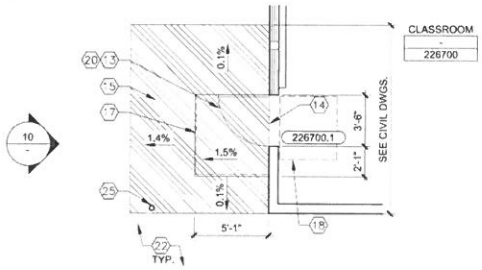

NOTE: SURFACE SLOPES ARE SPPROXIMATE. SEE CIVIL SHEET C1.17 FOR ADDITIONAL INFO & EXACT SLOPES.

BUILDING A CLASSROOM PLAN - PROPOSED (RM.# 226700) | SCALE: 1/4"=1'-0" | 9

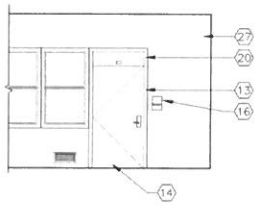

BUILDING A CLASSROOM ELEVATION - PROPOSED (RM.# 226700) | SCALE: 1/4"=1'-0" | 10

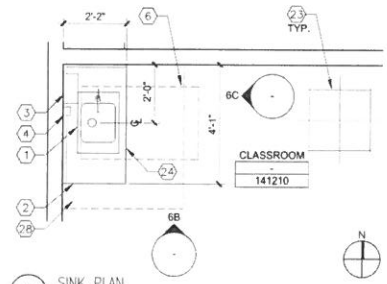

A SINK PLAN

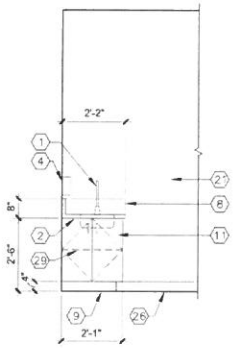

B SINK SIDE ELEVATION

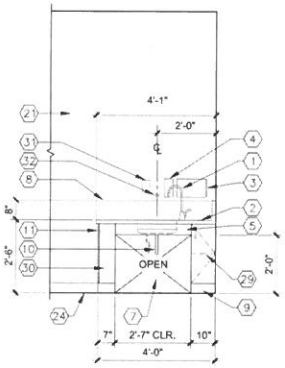

C SINK FRONT ELEVATION

BUILDING AA-3495 SINK PLAN & ELEVATIONS - PROPOSED (RM.# 141210) | SCALE: 1/2" = 1'-0" | 6

MODERNIZATION KEYNOTES:

1. SINK & FAUCET
2. SOLID SURFACE COUNTER TOP
3. (E) PAPER TOWEL DISPENSER TO BE RE-INSTALLED
4. (E) SOAP DISPENSER TO BR RE-INSTALLED
5. FIXED WOOD APRON W/ PLASTIC LAMINATE
6. 30" X 48" CLEAR FLOOR SPACE FOR WHEEL-CHAIR FOR FORWARD APROACH
7. REPAIR, REFINISH & RE-PAINT BACK WALL AS REQUIRED
8. INTEGRAL SOLID SURFACE BACK SPLASH
9. RUBBER BASE TO MATCH EXISTING
10. INSULATED DRAIN & WATER PIPES
11. PLASTIC LAMINATE FLUSH OVERLAY CABINET DOOR & DRAWER FRONTS
12. PLASTIC LAMINATE SIDE PANEL
13. DOOR & HARDWARE TO BE REPLACED, EXISTING DOOR FRAME TO BE MODIFIED IN ORDER TO REVERSE SWING SO THAT HINGES ARE ON OPPOSITE SIDE
14. DOOR THRESHOLD TO BE REPLACED WITH LOW PROFILE TYPE
15. CONC. PAVEMENT (SEE CIVIL DWGS.)
16. ROOM ID SIGN (SEE 9/A9.11)
17. 67"W X 61"D MIN. MANEUVERING CLEARANCE ON PULL SIDE OF DOOR
18. 55"W X 49"D MIN. MANEUVERING CLEARANCE ON PUSH SIDE OF DOOR
19. PLASTIC LAMINATE SIDE PANEL
20. (E) FIXED TRANSOM PANEL
21. (E) VINYL WALL COVERING
22. (E) CONC. PAVEMENT
23. (E) 12"X12" VCT FLOORING
24. EXTEND 12"X12" VCT FLOORING UNDER OPEN PORTION OF SINK CABINET, COLOR & PATTERN TO MATCH EXISTING
25. (E) COLUMN
26. (E) RUBBER BASE
27. (E) CEMENT PLASTER WALL FINISH
28. 12"X12" VCT FLOORING TO BE REPLACED
29. ADJUSTABLE SHELF
30. FIXED PANEL
31. WALL ACCESS PANEL (SEE P6.21)
32. WALL CLEANOUT (SEE P6.21)

MODERNIZATION LEGEND:

- EXISTING
- WALL TYPE (SEE 4/T-2 NOTE #5)
- FLR., WALL, OR CEILING FINISH TO BE REPLACED
- CONC. PAVEMENT (SEE CIVIL DWGS.)

MODERNIZATION NOTES:

1. (E) FIRE ALARM SYSTEM SHALL BE PROTECTED IN PLACE & SHALL REMAIN OPERATIONAL THROUGHOUT THE DURATION OF CONSTRUCTION

NOTES | SCALE: N.T.S. | 3

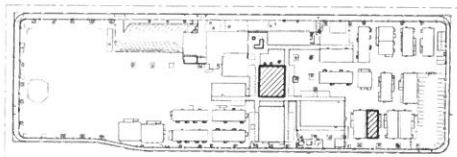

KEY PLAN | SCALE: N.T.S. | 4

DIVISION OF THE STATE ARCHITECT

DSA APP # 03-XXXXXX

LOS ANGELES UNIFIED SCHOOL DISTRICT

ASSET MANAGEMENT FACILITIES SERVICES DIVISION
333 S. BEAUDRY AVENUE, 23RD FLOOR
LOS ANGELES, CALIFORNIA 90017

PROJECT TITLE AND SCHOOL LOCATION

BASSETT STREET ELEMENTARY SCHOOL
15756 BASSETT ST
LAKE BALBOA, CA 91406

VOLUNTARY BARRIER REMOVAL

COLIN NO: 10373370

COMMISSIONED ARCHITECT

Swift Lee Office
1231 N Spring St. Suite B-203
Los Angeles, CA 90012
T. 323.257.8200
www.swiftleeoffice.com

CONSULTANT

STAMPS/SEALS

LICENSED ARCHITECT NATHAN A. SWIFT C-28798 03-31-25 RENEWAL DATE STATE OF CALIFORNIA

50% CD	12.20.23
50% CD (PLATFORM LIFT)	02.23.24
100% CD	06.03.24

SHEET TITLE:
AA-3495 & BLDG. A PLANS & ELEVATIONS PROPOSED

PROJECT NO. | PROJECT ARCH.
DRAWN | CHECKED
SHEET NUMBER
A6.21
DATE | SHEET OF

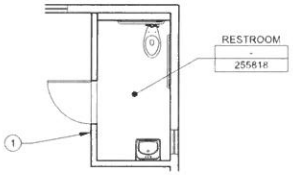

ROOM ID SIGN @MAIN BLDG. RESTROOM PLAN - DEMO (RM.# 255818) | SCALE: 1/4"=1'-0" | 9

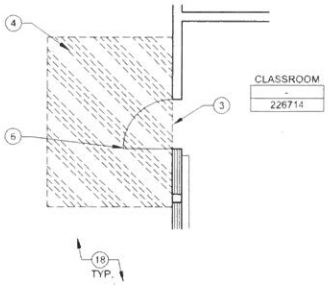

BUILDING B CLASSROOM PLAN - DEMO (RM.# 226714) | SCALE: 1/4"=1'-0" | 5

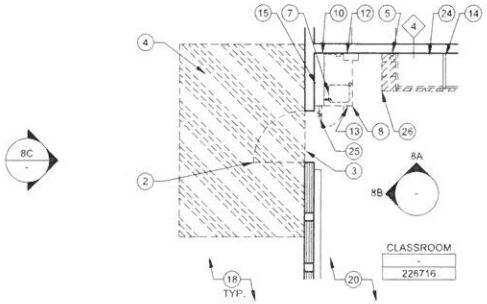

BUILDING B CLASSROOM PLAN - DEMO (RM.# 226716) | SCALE: 1/4"=1'-0" | 6

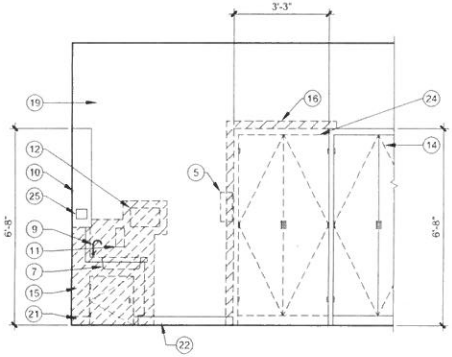

A SINK SIDE ELEVATION

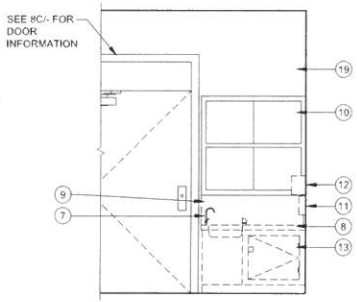

B SINK FRONT ELEVATION

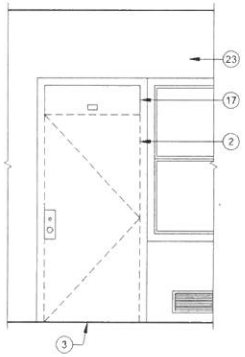

C DOOR ELEVATION (EXTERIOR)

BUILDING B CLASSROOM ELEVATIONS - DEMO (RM.# 226716) | SCALE: 1/2"=1'-0" | 8

DEMOLITION KEYNOTES:

1. ROOM ID SIGN TO BE RELOCATED
2. DOOR & HARDWARE TO BE REMOVED. FRAME TO REMAIN
3. DOOR THRESHOLD TO BE REMOVED
4. CONCRETE PAVEMENT TO BE REMOVED (SEE C1.18)
5. FIRE EXTINGUISHER TO BE RELOCATED
6. DOOR HARDWARE TO BE REMOVED. DOOR & FRAME TO REMAIN
7. SINK & FAUCET TO BE REMOVED
8. COUNTER TOP TO BE REMOVED
9. BACK SPLASH TO BE REMOVED
10. UPPER CABINET TO REMAIN
11. SOAP DISPENSER TO BE REMOVED
12. PAPER TOWEL DISPENSER TO BE REMOVED
13. BUILT-IN BASE CABINET TO BE REMOVED
14. PORTION OF BUILT-IN STORAGE CABINET TO REMAIN
15. 2X6 WOOD FURRING BEHIND CABINET TO REMAIN (SEE 20/A5.20)
16. LATH & PLASTER WALL FINISH TO BE REMOVED
17. FIXED TRANSOM PANEL TO REMAIN
18. CONC. PAVEMENT TO REMAIN
19. LATH & PLASTER WALL FINISH TO REMAIN
20. 12"X12" VCT FLOORING TO REMAIN
21. PORTION OF WOOD BASE TO BE REMOVED
22. WOOD BASE TO REMAIN
23. CEMENT PLASTER WALL FINISH TO REMAIN
24. PORTION OF BUILT-IN STORAGE CABINET TO BE REMOVED
25. LIGHT SWITCH TO REMAIN
26. 12"X12" VCT FLOORING TO BE REMOVED

DEMOLITION LEGEND:

- EXISTING TO REMAIN
- EXISTING TO BE REMOVED
- WALL TYPE (SEE NOTE 2)
- CONCRETE PAVEMENT TO BE REMOVED
- FINISH TO BE REMOVED

DEMOLITION NOTES:

1. (E) FIRE ALARM SYSTEM SHALL BE PROTECTED IN PLACE & SHALL REMAIN OPERATIONAL THROUGHOUT THE DURATION OF CONSTRUCTION
2. FOR DEMOLITION NOTES, SEE 3/T-3
3. FOR (E) WALL TYPE DESIGNATIONS REFER TO DEMO. PLANS. FOR PROPOSED WALL TYPE DESIGNATIONS REFER TO PROPOSED FLOOR PLANS. FOR (E) WALL TYPE DETAILS REFER TO A9.1 & PROPOSED WALL TYPE DETAILS REFER TO A9.2.

NOTES | SCALE: N.T.S. | 3

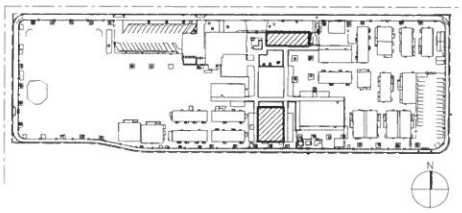

KEY PLAN | SCALE: N.T.S. | 4

DIVISION OF THE STATE ARCHITECT

DSA APP # 03-XXXXXX

LOS ANGELES UNIFIED SCHOOL DISTRICT

ASSET MANAGEMENT FACILITIES SERVICES DIVISION
333 S. BEAUDRY AVENUE, 23RD FLOOR
LOS ANGELES, CALIFORNIA 90017

PROJECT TITLE AND SCHOOL LOCATION

BASSETT STREET ELEMENTARY SCHOOL
15758 BASSETT ST
LAKE BALBOA, CA 91406

VOLUNTARY BARRIER REMOVAL

COLIN NO: 10373370

COMMISSIONED ARCHITECT

Swift Lee Office
1231 N Spring St, Suite B-203
Los Angeles, CA 90012
T: 323.257.8200
www.swiftleeoffice.com

CONSULTANT

STAMPS/SEALS

LICENSED ARCHITECT NATHAN A SWIFT C-28798 03-31-25 RENEWAL DATE STATE OF CALIFORNIA

50% CD	12.20.23
50% CD (PLATFORM LIFT)	02.23.24
100% CD	06.03.24

SHEET TITLE

BLDG. B PLANS & ELEV. & MAIN BLDG. PLAN - DEMO

PROJECT NO.: | PROJECT ARCH.
DRAWN: | CHECKED:
SHEET NUMBER

A6.10

DATE: | SHEET OF

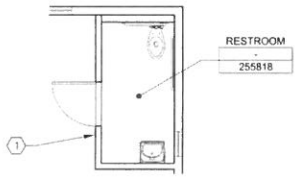

ROOM ID SIGN @MAIN BLDG. RESTROOM PLAN - PROPOSED (RM.# 255818) | SCALE: 1/4"=1'-0" | 9

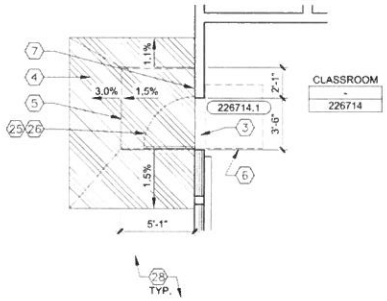

BUILDING B CLASSROOM PLAN - PROPOSED (RM.# 226714) | SCALE: 1/4"=1'-0" | 5

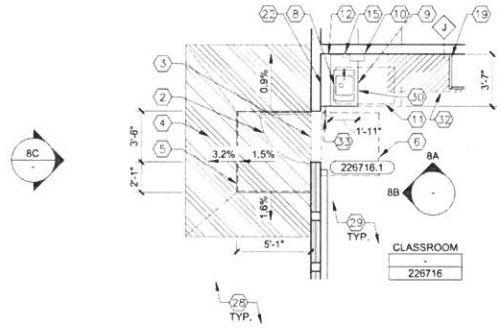

BUILDING B CLASSROOM PLAN - PROPOSED (RM.# 226716) | SCALE: 1/4"=1'-0" | 6

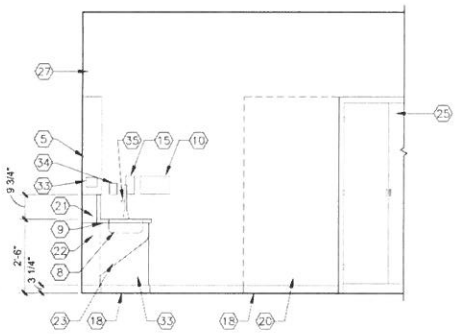

A SINK SIDE ELEVATION

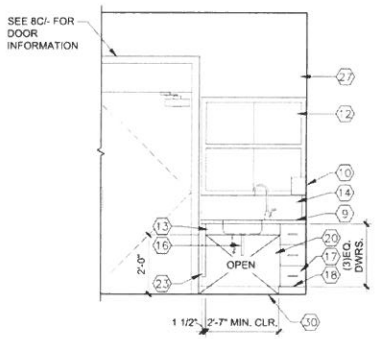

B SINK FRONT ELEVATION

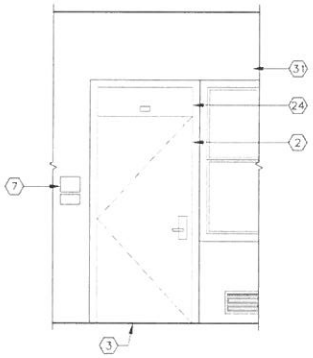

C DOOR ELEVATION EXTERIOR

BUILDING B CLASSROOM ELEVATIONS - DEMO (RM.# 226716) | SCALE: 1/2"=1'-0" | 8

MODERNIZATION KEYNOTES:

1. (E) ROOM ID SIGN TO BE RELOCATED (SEE 9/A9.11)
2. DOOR & HARDWARE TO BE REPLACED. EXISTING DOOR FRAME TO BE MODIFIED IN ORDER TO REVERSE SWING SO THAT HINGES ARE ON OPPOSITE SIDE
3. DOOR THRESHOLD TO BE REPLACED WITH LOW PROFILE TYPE (SEE 6A/A9.7)
4. CONC. PAVEMENT (SEE CIVIL DWGS.)
5. 66"W X 60"D MIN. MANEUVERING CLEARANCE ON PULL SIDE OF DOOR
6. 54"W X 48"D MIN. MANEUVERING CLEARANCE ON PUSH SIDE OF DOOR
7. ROOM ID SIGN (SEE 9/A9.11)
8. SINK & FAUCET
9. SOLID SURFACE COUNTER TOP
10. (E) PAPER TOWEL DISPENSER TO BR RE-INSTALLED
11. 30" X 48" CLEAR FLOOR SPACE FOR WHEEL-CHAIR FOR FORWARD APROACH
12. (E) UPPER CABINET
13. FIXED WOOD APRON W/ PLASTIC LAMINATE
14. INTEGRAL SOLID SURFACE BACK SPLASH
15. (E) SOAP DISPENSER TO BE RE-INSTALLED
16. INSULATED DRAIN & WATER PIPES
17. PLASTIC LAMINATE FLUSH OVERLAY CABINET DOOR & DRAWER FRONTS
18. PAINTED WOOD BASE TO MATCH EXISTING
19. (E) BUILT-IN STORAGE CABINET
20. PLYWOOD BACKING W/ PLASTIC LAMINATE FINISH
21. WOOD PANEL PAINTED TO MATCH (E) UPPER CABINET
22. 2X6 WOOD FURRING BEHIND CABINET (SEE 20/A5.20)
23. PLASTIC LAMINATE GUSSET
24. (E) FIXED TRANSOM PANEL
25. (E) DOOR & FRAME
26. AUTOMATIC CLOSER AND LOCKSET TO BE REPLACED
27. (E) LATH & PLASTER WALL FINISH TO BE PAINTED
28. (E) CONC. PAVEMENT
29. (E) 12"X12" VCT FLOORING
30. EXTEND 12"X12" VCT FLOORING UNDER OPEN PORTION OF SINK CABINET. COLOR & PATTERN TO MATCH EXISTING
31. (E) CEMENT PLASTER WALL FINISH
32. EXTEND 12"X12" VCT FLOORING
33. PLASTIC LAMINATE SIDE PANEL
34. ACCESS PANEL (SEE P6.11)
35. WALL CLEANOUT (SEE P6.11)

MODERNIZATION LEGEND:

- EXISTING
- FINISH TO BE REPLACED
- CONC. PAVEMENT (SEE CIVIL DWGS.)
- WALL TYPE (SEE 4/T-2 NOTE #5)

MODERNIZATION NOTES:

1. (E) FIRE ALARM SYSTEM SHALL BE PROTECTED IN PLACE & SHALL REMAIN OPERATIONAL THROUGHOUT THE DURATION OF CONSTRUCTION

NOTES | SCALE: N.T.S. | 3

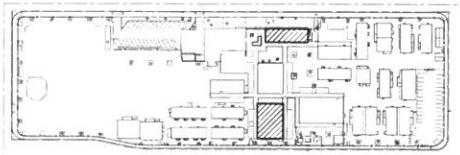

KEY PLAN | SCALE: N.T.S. | 4

DIVISION OF THE STATE ARCHITECT

DSA APP # 03-XXXXXX

LOS ANGELES UNIFIED SCHOOL DISTRICT

ASSET MANAGEMENT FACILITIES SERVICES DIVISION
333 S. BEAUDRY AVENUE, 23RD FLOOR
LOS ANGELES, CALIFORNIA 90017

PROJECT TITLE AND SCHOOL LOCATION

BASSETT STREET ELEMENTARY SCHOOL
15756 BASSETT ST
LAKE BALBOA, CA 91406

VOLUNTARY BARRIER REMOVAL

COLIN NO: 10373370

COMMISSIONED ARCHITECT

Swift Lee Office
1231 N Spring St. Suite B-203
Los Angeles, CA 90012
T. 323.257.8200
www.swiftleeoffice.com

CONSULTANT

STAMPS/SEALS

LICENSED ARCHITECT
NAYAN A. SWIFT
C-28798
03-31-25
RENEWAL DATE
STATE OF CALIFORNIA

50% CD	12.20.23
50% CD (PLATFORM LIFT)	02.23.24
100% CD	06.03.24

SHEET TITLE
BLDG. B PLANS & ELEV. & MAIN BLDG. PLAN - PROPOSED

PROJECT NO. | PROJECT ARCH.
DRAWN | CHECKED

SHEET NUMBER
A6.11

DATE | SHEET | OF

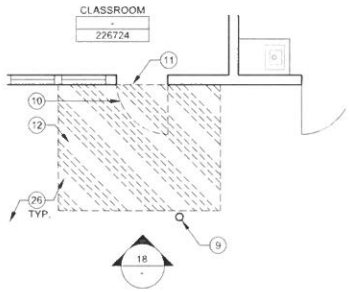

NOTE:
SEE C1.23 FOR EXTENT OF DEMO

BLDG. C CLASSROOM PLAN - DEMO (RM.# 226724) | SCALE: 1/4"=1'-0" | 13

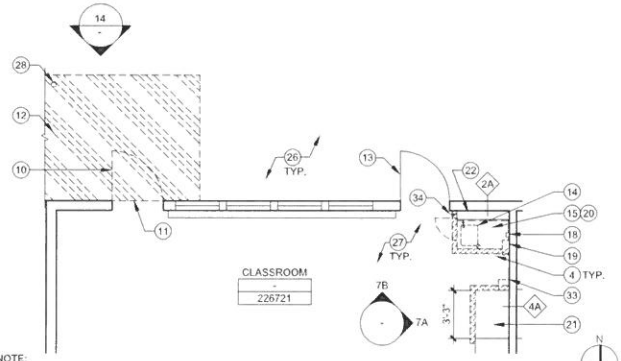

NOTE:
SEE C1.19 FOR EXTENT OF DEMO

BLDG. C CLASSROOM PLAN - DEMO (RM.# 226721) | SCALE: 1/4"=1'-0" | 5

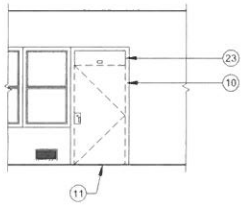

ELEV. - DEMO (RM.# 226724) | SCALE: 1/4"=1'-0" | 18

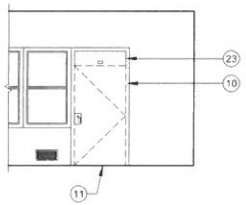

ELEV. - DEMO (RM.# 226721) | SCALE: 1/4"=1'-0" | 14

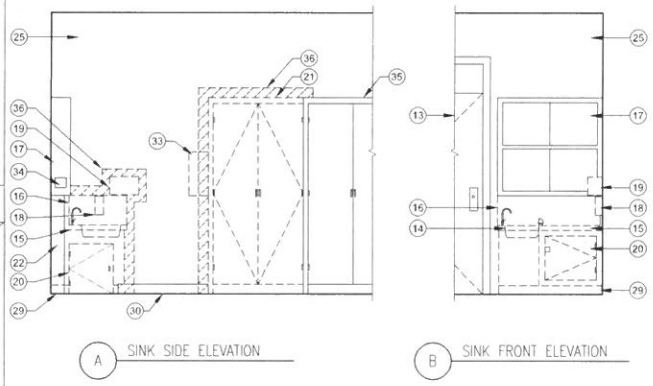

BLDG. C CLASSROOM ELEVATIONS - DEMO (RM.# 226721) | SCALE: 1/2"=1'-0" | 7

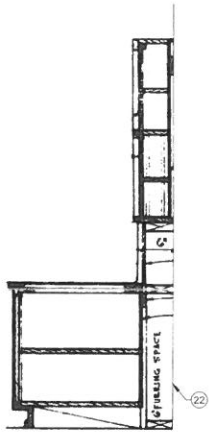

FOR REFERENCE ONLY

CLASSROOM SINK SECTION - AS BUILT | SCALE: N.T.S. | 20

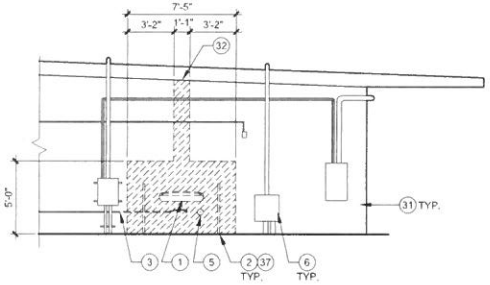

BUILDING C DRINKING FOUNTAIN ELEVATIONS - DEMO (RM.# 24893) | SCALE: 1/4"=1'-0" | 12

NOTE:
SEE 1/A1.21 FOR PAVEMENT DEMO PLAN

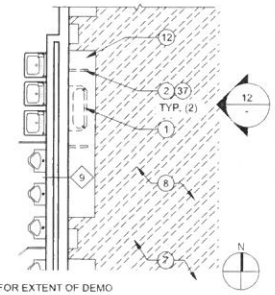

NOTE:
SEE C1.24 FOR EXTENT OF DEMO

BLDG. C D.F. PLAN - DEMO (RM.# 24893) | SCALE: 1/4"=1'-0" | 8

DEMOLITION KEYNOTES:

1. DRINKING FOUNTAIN TO BE REMOVED
2. WING GUARD TO BE REMOVED
3. ELECTRICAL GROUNDING CABLE TO BE REMOVED (SEE E-)
4. VCT FLOORING TO BE REMOVED
5. CLEAN OUT TO BE REMOVED
6. EQUIPMENTS TO REMAIN
7. AC PAVEMENT TO REMAIN
8. AC PAVEMENT TO BE REMOVED (SEE C1.24)
9. DOWNSPOUT TO REMAIN
10. DOOR & HARDWARE TO BE REMOVED, FRAME TO REMAIN
11. DOOR THRESHOLD TO BE REMOVED
12. CONCRETE PAVEMENT TO BE REMOVED (SEE C1.24)
13. DOOR TO REMAIN
14. SINK & FAUCET TO BE REMOVED
15. COUNTER TOP TO BE REMOVED
16. BACK SPLASH TO BE REMOVED
17. UPPER CABINET TO REMAIN
18. SOAP DISPENSER TO BE REMOVED
19. PAPER TOWEL DISPENSER TO BE REMOVED
20. BUILT-IN BASE CABINET TO BE REMOVED
21. PORTION OF BUILT-IN STORAGE CABINET TO BE REMOVED
22. 2X6 WOOD FURRING BEHIND CABINET TO REMAIN (SEE 20/-)
23. FIXED TRANSOM PANEL TO REMAIN
24. BUILT-IN STORAGE CABINET TO REMAIN
25. LATH & PLASTER WALL FINISH TO REMAIN
26. CONC. PAVEMENT TO REMAIN
27. 12"X12" VCT FLOORING TO REMAIN
28. COLUMN TO REMAIN
29. PORTION OF WOOD BASE TO BE REMOVED
30. WOOD BASE TO REMAIN
31. CEMENT PLASTER WALL FINISH TO REMAIN
32. CEMENT PLASTER WALL FINISH & LATH TO BE REMOVED
33. FIRE EXTINGUISHER TO BE RELOCATED
34. ELECTRIC SWITCH TO REMAIN
35. PORTION OF BUILT-IN STORAGE CABINET TO REMAIN
36. LATH & PLASTER WALL FINISH TO BE REMOVED
37. WING GUARD FOOTING TO REMAIN, CUT PIPE AND GRIND FLUSH W/ CONCRETE.

DEMOLITION LEGEND:

- EXISTING TO REMAIN
- EXISTING TO BE REMOVED
- WALL TYPE (SEE NOTE 2)
- FINISH TO BR REMOVED
- AC PAVEMENT TO BE REMOVED
- CONCRETE PAVEMENT TO BE REMOVED

DEMOLITION NOTES:

1. (E) FIRE ALARM SYSTEM SHALL BE PROTECTED IN PLACE & SHALL REMAIN OPERATIONAL THROUGHOUT THE DURATION OF CONSTRUCTION
2. FOR DEMOLITION NOTES, SEE 3/T-3
3. FOR (E) WALL TYPE DESIGNATIONS REFER TO DEMO. PLANS. FOR PROPOSED WALL TYPE DESIGNATIONS REFER TO PROPOSED FLOOR PLANS. FOR (E) WALL TYPE DETAILS REFER TO A9.1 & PROPOSED WALL TYPE DETAILS REFER TO A9.2.

NOTES | SCALE: N.T.S. | 3

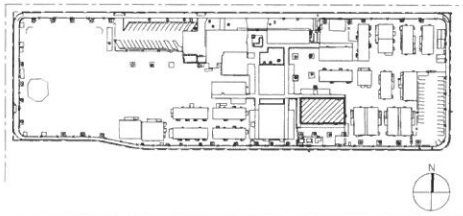

KEY PLAN | SCALE: N.T.S. | 4

DIVISION OF THE STATE ARCHITECT

DSA APP # 03-XXXXXX

LOS ANGELES UNIFIED SCHOOL DISTRICT

ASSET MANAGEMENT FACILITIES SERVICES DIVISION
333 S. BEAUDRY AVENUE, 23RD FLOOR
LOS ANGELES, CALIFORNIA 90017

PROJECT TITLE AND SCHOOL LOCATION

BASSETT STREET ELEMENTARY SCHOOL
15756 BASSETT ST
LAKE BALBOA, CA 91406

VOLUNTARY BARRIER REMOVAL

COLIN NO: 10373370

COMMISSIONED ARCHITECT

Swift Lee Office
1231 N Spring St, Suite B-203
Los Angeles, CA 90012
T. 323.257.8200
www.swiftleeoffice.com

CONSULTANT

STAMPS/SEALS

LICENSED ARCHITECT NATHAN A. SWIFT C-28798 03-31-25 RENEWAL DATE STATE OF CALIFORNIA

50% CD	12.20.23
50% CD (PLATFORM LIFT)	02.23.24
100% CD	06.03.24

SHEET TITLE:
BLDG. C CLASSROOM & DRINKING FOUNTAIN PLANS & ELEVATIONS - DEMO

PROJECT NO.: | PROJECT ARCH.
DRAWN: | CHECKED:

SHEET NUMBER
A5.20

DATE | SHEET | OF

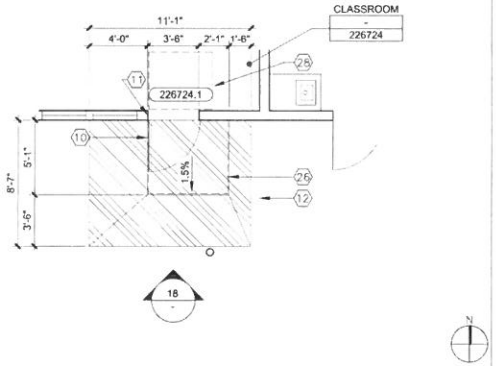

BLDG. C CLASSROOM PLAN - PROPOSED (RM.# 226724) | SCALE: 1/4"=1'-0" | 13

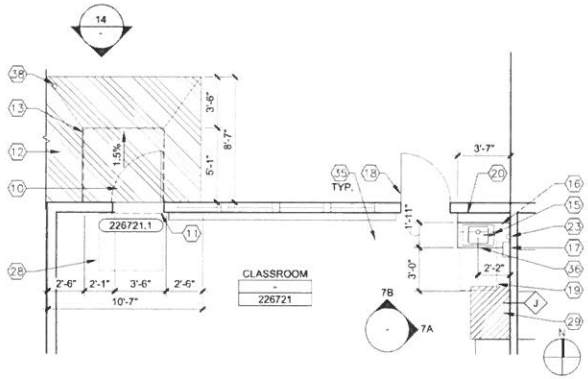

BLDG. C CLASSROOM PLAN - PROPOSED (RM.# 226721) | SCALE: 1/4"=1'-0" | 5

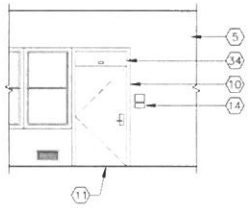

ELEV.-PROPOSED (RM.# 226724) | SCALE: 1/4"=1'-0" | 18

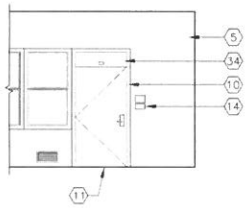

ELEV.-PROP. (RM.# 226721) | SCALE: 1/4"=1'-0" | 14

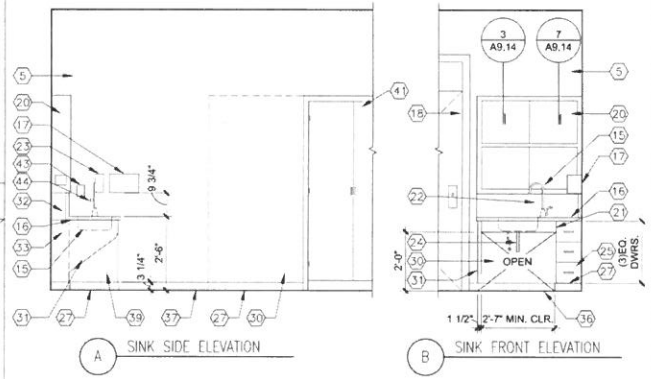

BLDG. C CLASSROOM ELEVATIONS - PROPOSED (RM.# 226721) | SCALE: 1/2"=1'-0" | 7

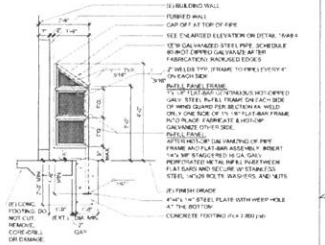

WING GUARD (EXT.) | SCALE: N.T.S. | 19

NOTE: SEE 16/A9.4 FOR ADDITIONAL INFO.

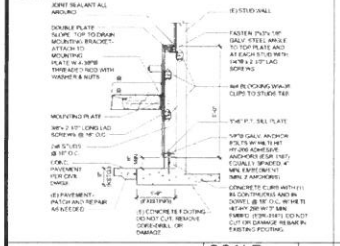

D.F. SECTION | SCALE: N.T.S. | 20

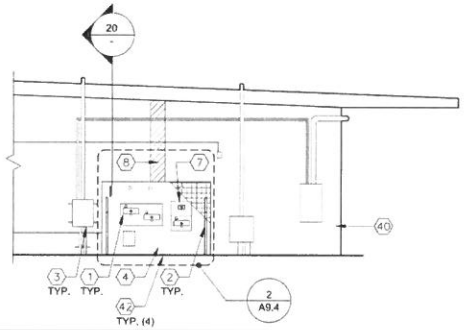

BUILDING C DRINKING FOUNTAIN ELEVATION - PROPOSED (RM.# 24893) | SCALE: 1/4"=1'-0" | 12

NOTE:
SEE 2/A1.21 FOR PAVEMENT PLAN

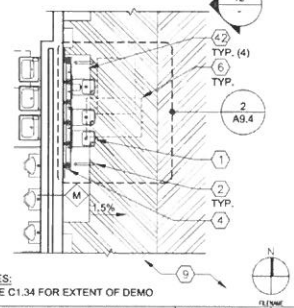

NOTES:
1. SEE C1.34 FOR EXTENT OF DEMO

BLDG. C. D.F. PLAN - PROPOSED (RM. # 24893) | SCALE: 1/4"=1'-0" | 8

MODERNIZATION KEYNOTES:

1. DRINKING FOUNTAIN
2. WING GUARD (SEE 19/-)
3. (E) ELECTRICAL BOX
4. FURRED WALL
5. (E) LATH & PLASTER TO BE PTD.
6. 30" X 48" CLEAR FLOOR SPACE FOR PARALLEL APPROACH. SURFACE SLOPE NOT TO EXCEED 1.5% IN ANY DIRECTION.
7. BOTTLE FILLER (SEE 11/A9.4)
8. CEMENT PLASTER WALL FINISH TO MATCH EXISTING
9. (E) AC PAVEMENT
10. DOOR & HARDWARE TO BE REPLACED. EXISTING DOOR FRAME TO BE MODIFIED IN ORDER TO REVERSE SWING SO THAT HINGES ARE ON OPPOSITE SIDE
11. DOOR THRESHOLD TO BE REPLACED WITH LOW PROFILE TYPE (SEE 6A/A9.4)
12. CONC. PAVEMENT (SEE C1.19)
13. 54"W X 60"D MIN. MANEUVERING CLEARANCE ON PULL SIDE OF DOOR
14. ROOM ID SIGN (SEE 12/A9.4)
15. SINK & FAUCET
16. SOLID SURFACE COUNTER TOP
17. (E) PAPER TOWEL DISPENSER TO BE RE-INSTALLED
18. (E) DOOR
19. 30" X 48" CLEAR FLOOR SPACE FOR WHEEL-CHAIR FOR FORWARD APROACH
20. (E) UPPER CABINET
21. FIXED WOOD APRON W/ PLASTIC LAMINATE
22. INTEGRAL SOLID SURFACE BACK SPLASH
23. (E) SOAP DISPENSER TO BE RE-INSTALLED
24. INSULATED DRAIN & WATER PIPES
25. PLASTIC LAMINATE FLUSH OVERLAY CABINET DOOR & DRAWER FRONTS
26. 66"W X 60"D MIN. MANEUVERING CLEARANCE ON PULL SIDE OF DOOR
27. PAINTED WOOD BASE TO MATCH EXISTING
28. 54"W X 48"D MIN. MANEUVERING CLEARANCE ON PUSH SIDE OF DOOR
29. EXTEND 12"X12" VCT FLOORING
30. PLYWOOD BACKING W/ PLASTIC LAMINATE FINISH
31. PLASTIC LAMINATE GUSSET
32. WOOD PANEL PAINTED TO MATCH (E) UPPER CABINET
33. (E) 2X6 WOOD FURRING BEHIND CABINET (SEE 20/A5.20)
34. (E) FIXED TRANSOM
35. (E) 12"X12" VCT FLOORING
36. EXTEND 12"X12" VCT FLOORING UNDER OPEN PORTION OF SINK CABINET. COLOR & PATTERN TO MATCH EXISTING
37. (E) WOOD BASE
38. (E) COLUMN
39. PLASTIC LAMINATE SIDE PANEL
40. (E) CEMENT WALL FINISH PAINT TO BE PAINTED
41. (E) BUILT-IN STORAGE CABINET
42. AT LOCATION OF DEMOLISHED WING GUARDS. GRIND STEEL PIPE FLUSH WITH CONC. & FILL WITH NON-METALLIC NON-SHRINK GROUT.
43. ACCESS PANEL (SEE P5.21)
44. WALL CLEANOUT (SEE P5.21)

MODERNIZATION LEGEND:

- EXISTING
- WALL TO BE REPLACED IN ENTIRETY
- # WALL TYPE (SEE 4/T-2 NOTE #5)
- FINISH TO BE REPLACED
- AC PAVEMENT (SEE CIVIL DWGS.)
- CONC. PAVEMENT (SEE CIVIL DWGS.)

MODERNIZATION NOTES:

1. (E) FIRE ALARM SYSTEM SHALL BE PROTECTED IN PLACE & SHALL REMAIN OPERATIONAL THROUGHOUT THE DURATION OF CONSTRUCTION

NOTES | SCALE: N.T.S. | 3

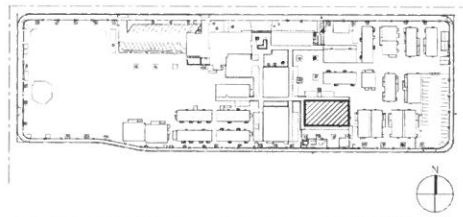

KEY PLAN | SCALE: N.T.S. | 4

DIVISION OF THE STATE ARCHITECT

DSA APP # 03-XXXXXX

LOS ANGELES UNIFIED SCHOOL DISTRICT

ASSET MANAGEMENT FACILITIES SERVICES DIVISION
333 S. BEAUDRY AVENUE, 23RD FLOOR
LOS ANGELES, CALIFORNIA 90017

PROJECT TITLE AND SCHOOL LOCATION

BASSETT STREET ELEMENTARY SCHOOL
15756 BASSETT ST
LAKE BALBOA, CA 91406

VOLUNTARY BARRIER REMOVAL

COLIN NO:10373370

COMMISSIONED ARCHITECT

Swift Lee Office
1231 N Spring St. Suite B-203
Los Angeles, CA 90012
T. 323.257.8200
www.swiftleeoffice.com

CONSULTANT

STAMPS/SEALS

LICENSED ARCHITECT NATHAN A SWIFT C-28798 03-31-25 RENEWAL DATE STATE OF CALIFORNIA

50% CD	12.20.23
50% CD (PLATFORM LIFT)	02.23.24
100% CD	06.03.24

SHEET TITLE

BLDG. C CLASSROOM & DRINKING FOUNTAIN PLANS & ELEVATIONS - PROPOSED

PROJECT NO. | PROJECT ARCH.
DRAWN | CHECKED

SHEET NUMBER

A5.21

DATE | SHEET | OF

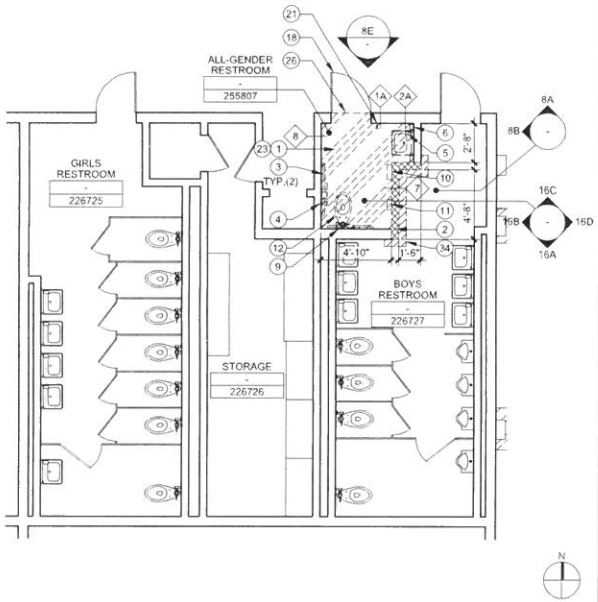

BUILDING C ALL-GENDER RESTROOM FLOOR PLAN - DEMO (RM.# 226707, 226727) | SCALE: 1/4" = 1'-0" | 14

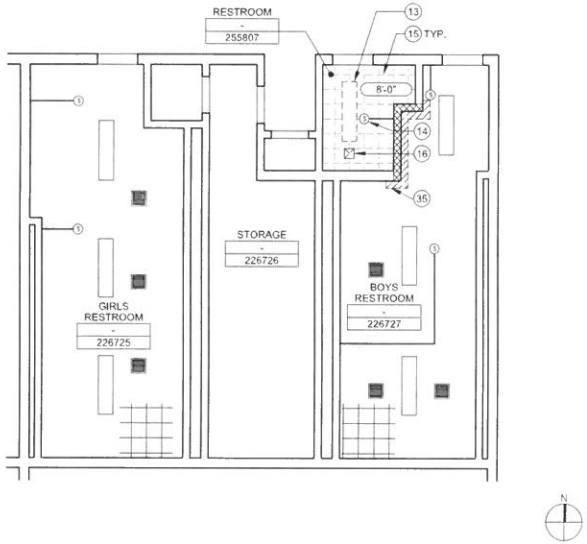

BUILDING C ALL-GENDER RESTROOM R.C.P. - DEMO (RM.# 226707, 226727) | SCALE: 1/4" = 1'-0" | 6

DEMOLITION KEYNOTES

1. 4" CONC. SLAB ON GRADE W/ 6"X6"/ #10X#10 E.W.M. TO BE REMOVED
2. PORTION OF WALL TO BE REMOVED
3. GRAB BAR TO BE RELOCATED
4. TOILET PAPER DISPENSER TO BE REMOVED
5. LAVATORY TO BE REMOVED (SEE P5.10)
6. SOAP DISPENSER TO BE REMOVED
7. LATH & PLASTER TO BE REMOVED
8. ELECTRICAL RECEPTACLE TO REMAIN
9. TOILET SEAT COVER DISPENSER TO BE REMOVED
10. PAPER TOWEL DISPENSER TO BE REMOVED
11. SANITARY NAPKIN RECEPTACLE TO BE REMOVED
12. WATER CLOSET TO BE REMOVED (SEE P5.10)
13. LIGHT FIXTURE TO BE REMOVED (SEE E5.10)
14. SMOKE DETECTOR AND SURFACE-MOUNTED CONDUIT TO BE DETACHED FROM CEILING AND PROTECTED IN PLACE (SEE NOTE 3)
15. GLUED-ON ACOUSTICAL CEILING TILES AND MASTIC TO BE REMOVED. LATH & PLASTER TO REMAIN.
16. EXHAUST FAN GRILL TO BE REMOVED (SEE E5.10)
17. CERAMIC TILE COVE BASE TO BE REMOVED
18. DOOR, FRAME, AND HARDWARE TO REMAIN
19. MIRROR TO BE REMOVED
20. FIRE ALARM HORN-STROBE & SURFACE MOUNTED CONDUIT TO BE DETACHED FROM WALL AND PROTECTED IN PLACE (SEE NOTE 3) (SEE FA5.11)
21. LIGHT SWITCH TO BE REMOVED (SEE E5.10)
22. GEOMETRIC DOOR SYMBOL TO BE REMOVED
23. 2X2 CERAMIC FLOOR TILE AND MORTAR SETTING BED TO BE REMOVED
24. CEMENT PLASTER WALL FINISH TO REMAIN
25. ROOM I.D. WALL SIGN TO BE REMOVED
26. DOOR THRESHOLD TO BE REMOVED
27. CERAMIC TILE COVE BASE TO REMAIN
28. 4X4 CERAMIC WALL TILE TO REMAIN
29. LATH & PLASTER TO REMAIN
30. 2X4 CERAMIC WALL TILE TO REMAIN
31. SURFACE-MOUNTED ELECTRICAL CONDUIT TO BE REMOVED
32. SURFACE-MOUNTED ELECTRICAL JUNCTION BOX TO BE REMOVED
33. CONC. SLAB ON GRADE TO BE REMOVED
34. CERAMIC FLOOR TILE AND MORTAR SETTING BED TO BE REMOVED
35. PAINTED GYPSUM BOARD TO BE REMOVED

DEMOLITION LEGEND:

- EXISTING TO REMAIN
- EXISTING TO BE REMOVED
- WALL TO BE REMOVED
- WALL TYPE (SEE NOTE 2)
- FINISH TO BE REMOVED
- CONCRETE SLAB ON GRADE TO BE REMOVED

DEMOLITION NOTES:

1. FOR DEMOLITION NOTES, SEE 3/T-3.
2. FOR (E) WALL TYPE DESIGNATIONS SEE DEMO. PLANS. FOR PROPOSED WALL TYPE DESIGNATIONS SEE PROPOSED PLANS. FOR (E) WALL TYPE DETAILS SEE A9.1. FOR PROPOSED WALL TYPE DETAILS SEE A9.2.
3. (E) FIRE ALARM SYSTEM SHALL BE PROTECTED IN PLACE & SHALL REMAIN OPERATIONAL THROUGHOUT THE DURATION OF CONSTRUCTION.

NOTES | SCALE: N.T.S. | 3

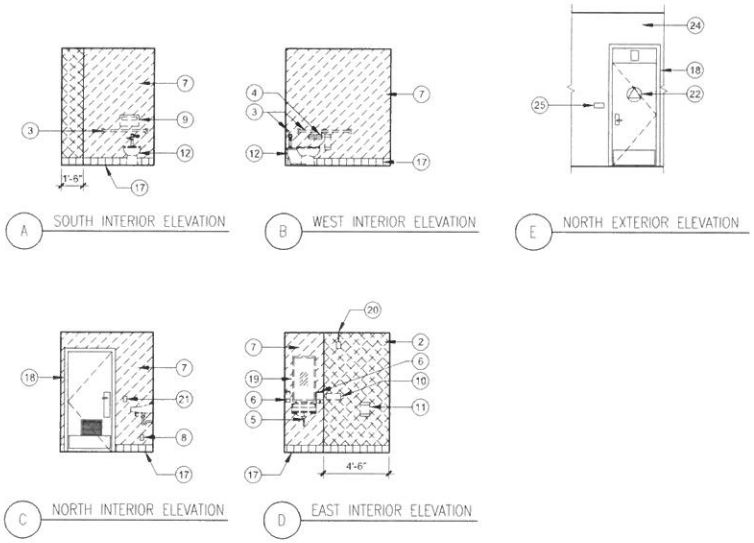

A SOUTH INTERIOR ELEVATION

B WEST INTERIOR ELEVATION

E NORTH EXTERIOR ELEVATION

C NORTH INTERIOR ELEVATION

D EAST INTERIOR ELEVATION

BUILDING C ALL-GENDER RESTROOM INTERIOR ELEVATIONS - DEMO (RM.# 226707, 226727) | SCALE: 1/4"=1'-0" | 16

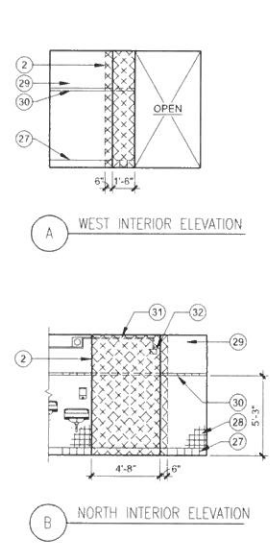

A WEST INTERIOR ELEVATION

B NORTH INTERIOR ELEVATION

BUILDING C BOYS RESTROOM ELEV. - DEMO (RM.# 226727) | SCALE: 1/4"=1'-0" | 8

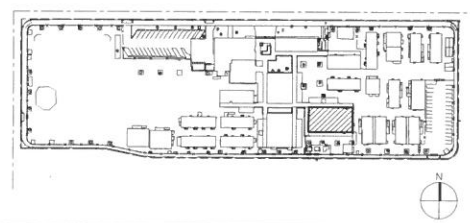

KEY PLAN | SCALE: N.T.S. | 4

DIVISION OF THE STATE ARCHITECT

DSA APP # 03-XXXXXX

LOS ANGELES UNIFIED SCHOOL DISTRICT

ASSET MANAGEMENT FACILITIES SERVICES DIVISION
333 S. BEAUDRY AVENUE, 23RD FLOOR
LOS ANGELES, CALIFORNIA 90017

PROJECT TITLE AND SCHOOL LOCATION

BASSETT STREET ELEMENTARY SCHOOL
15756 BASSETT ST
LAKE BALBOA, CA 91406

VOLUNTARY BARRIER REMOVAL

COLIN NO: 10373370

COMMISSIONED ARCHITECT

Swift Lee Office
1231 N Spring St, Suite B-203
Los Angeles, CA 90012
T: 323.257.8200
www.swiftleeoffice.com

CONSULTANT

STAMPS/SEALS

LICENSED ARCHITECT NATHAN A SWIFT C-28798 03-31-25 RENEWAL DATE STATE OF CALIFORNIA

50% CD	12.20.23
50% CD (PLATFORM LIFT)	02.23.24
100% CD	06.03.24

SHEET TITLE: BUILDING C RESTROOM PLANS & ELEVATIONS - DEMO

PROJECT NO.: | PROJECT ARCH
DRAWN: | CHECKED:

SHEET NUMBER: A5.10

DATE | SHEET OF

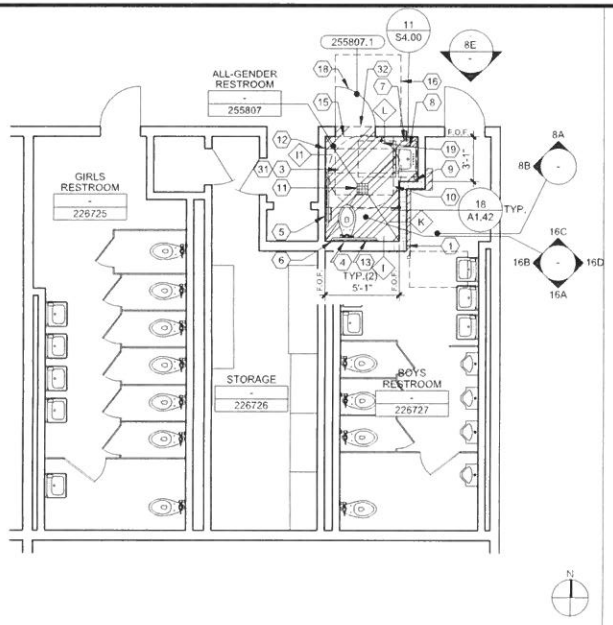

BUILDING C ALL-GENDER RESTROOM FLOOR PLAN - PROPOSED (RM.# 226707, 226727) | SCALE: 1/4" = 1'-0" | 14

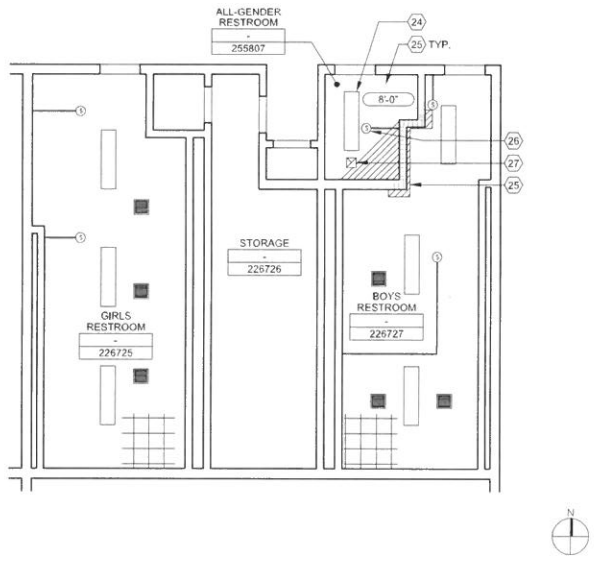

BUILDING C ALL-GENDER RESTROOM R.C.P. - PROPOSED (RM.# 226707, 226727) | SCALE: 1/4" = 1'-0" | 6

MODERNIZATION KEYNOTES

1. PROPOSED WALL
2. 4"X4" CERAMIC WALL TILE (SEE 1/A0.2)
3. CERAMIC MOSAIC FLOOR TILES
4. TOILET SEAT COVER DISPENSER (SEE 15/A9.5)
5. TOILET PAPER DISPENSER (SEE 15/A9.5)
6. WATER CLOSET (SEE P5.11)
7. 30" X 48" CLEAR FLOOR SPACE
8. LAVATORY, SEE P5.11
9. SOAP DISPENSER (SEE 15/A9.5)
10. 5'-0"DIA. WHEELCHAIR TURNING RAD.
11. FLOOR DRAIN W/ TRAP PRIMER (SEE P5.11)
12. 54" X 60" CLEAR FLOOR SPACE
13. GRAB BAR (SEE 1/A9.5)
14. (E) CEMENT PLASTER WALL FINISH
15. 48"W X 48"D MIN. MANEUVERING CLEARANCE ON PUSH SIDE OF DOOR
16. 54"W X 60"D MIN. MANEUVERING CLEARANCE ON PULL SIDE OF DOOR
17. CERAMIC TILE COVE BASE (SEE 20/A9.2)
18. (E) DOOR, FRAME, & HARDWARE
19. OCCUPANCY SENSOR WALL SWITCH (SEE E5.11)
20. (E) ELECTRICAL RECEPTACLE, REPLACE FACEPLATE
21. MIRROR (SEE 15/A9.5)
22. (E) FIRE ALARM HORN STROBE & SURFACE MOUNTED CONDUIT TO BE REINSTALLED (SEE NOTE 1) (SEE FA5.11)
23. GEOMETRIC DOOR SYMBOL (SEE 7/A9.11)
24. LIGHT FIXTURE TO BE REINSTALLED (SEE E5.11)
25. GYPSUM BOARD CEILING FINISH OVER (E) LATH & PLASTER
26. (E) SMOKE DETECTOR & SURFACE MOUNTED CONDUIT TO BE REINSTALLED (SEE NOTE 1)
27. EXHAUST FAN & GRILLE (SEE M5.11)
28. ALL GENDER RR I.D. SIGN (SEE 15/A9.11)
29. CLEANOUT (SEE P5.11)
30. WALL ACCESS PANEL (SEE P5.11)
31. CONC. SLAB ON GRADE
32. DOOR THRESHOLD TO BE REPLACED WITH LOW-PROFILE ADA-COMPLIANT TYPE (SEE 6/A9.7)
33. 2X4 CERAMIC WALL TILE TO BE REPLACED
34. CERAMIC TILE COVE BASE TO BE REPLACED
35. (E) 2X4 CERAMIC WALL TILE
36. (E) CERAMIC TILE COVE BASE
37. SURFACE-MOUNTED ELECTRICAL CONDUIT
38. SURFACE-MOUNTED ELECTRICAL JUNCTION BOX

MODERNIZATION NOTES:

1. (E) FIRE ALARM SYSTEM SHALL BE PROTECTED IN PLACE & SHALL REMAIN OPERATIONAL THROUGHOUT THE DURATION OF CONSTRUCTION.
2. PROVIDE GEOMETRIC DOOR SYMBOL ON BOTH SIDES OF RESTROOM DOOR
3. FOR TILE DESIGN, SEE A9.14
4.

MODERNIZATION LEGEND:

- EXISTING
- 2X4 WALL W/ 5/8" GYP. BD. BOTH SIDES
- WALL TO BE REPLACED
- # WALL TYPE (SEE 4/T-2 NOTE #5)
- FINISH TO BE REPLACED
- CONC. SLAB ON GRADE (SEE STRUCT. DWGS.) SLOPE TO DRAIN @ 1/8" PER FOOT MAX.

NOTES | SCALE: N.T.S. | 3

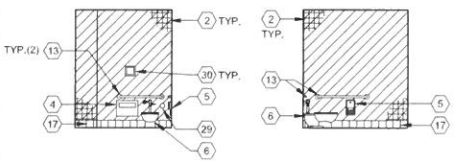

A SOUTH INTERIOR ELEVATION

B WEST INTERIOR ELEVATION

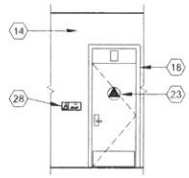

E NORTH EXTERIOR ELEVATION

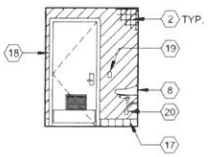

C NORTH INTERIOR ELEVATION

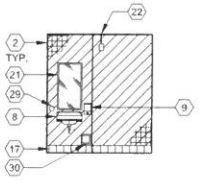

D EAST INTERIOR ELEVATION

BUILDING C ALL-GENDER RESTROOM INTERIOR ELEVATIONS - PROPOSED (RM.# 226707, 226727) | SCALE: 1/4"=1'-0" | 16

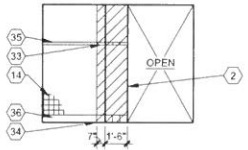

A WEST INTERIOR ELEVATION

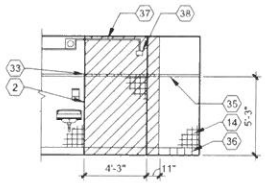

B NORTH INTERIOR ELEVATION

BUILDING C BOYS RESTROOM ELEV. - PROPOSED (RM.# 226727) | SCALE: 1/4"=1'-0" | 8

KEY PLAN | SCALE: N.T.S. | 4

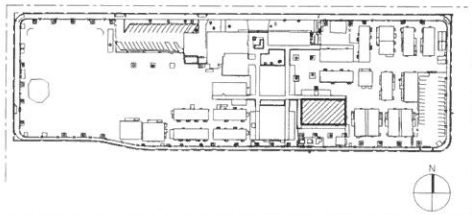

DIVISION OF THE STATE ARCHITECT

DSA APP # 03-XXXXXX

LOS ANGELES UNIFIED SCHOOL DISTRICT

ASSET MANAGEMENT FACILITIES SERVICES DIVISION
333 S. BEAUDRY AVENUE, 23RD FLOOR
LOS ANGELES, CALIFORNIA 90017

PROJECT TITLE AND SCHOOL LOCATION

BASSETT STREET ELEMENTARY SCHOOL
15756 BASSETT ST
LAKE BALBOA, CA 91406

VOLUNTARY BARRIER REMOVAL

COLIN. NO: 10373370

COMMISSIONED ARCHITECT

Swift Lee Office
1231 N Spring St. Suite B-203
Los Angeles, CA 90012
T. 323.257.8200
www.swiffleeoffice.com

CONSULTANT

STAMPS/SEALS

LICENSED ARCHITECT NATHAN A SWIFT C-28798 03-31-25 RENEWAL DATE STATE OF CALIFORNIA

50% CD	12.20.23
50% CD (PLATFORM LIFT)	02.23.24
100% CD	06.03.24

SHEET TITLE

BUILDING C RESTROOM PLANS & ELEVATIONS - PROPOSED

PROJECT NO.: | PROJECT ARCH.
DRAWN: | CHECKED:

SHEET NUMBER

A5.11

DATE | SHEET | OF

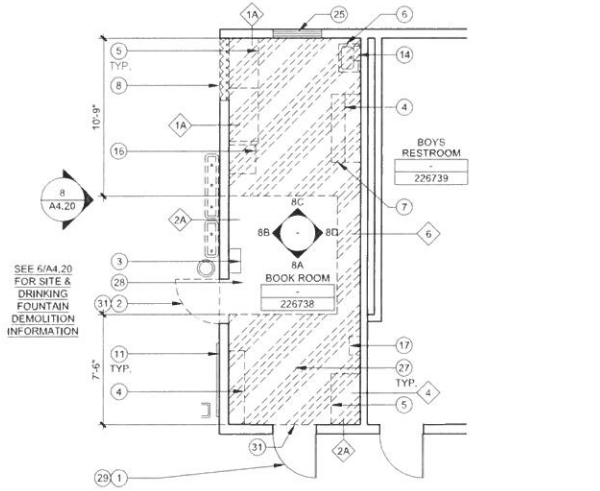

BUILDING D BOOKROOM FLOOR PLAN - DEMO (RM.# 226738) | SCALE: 1/4" = 1'-0" | 14

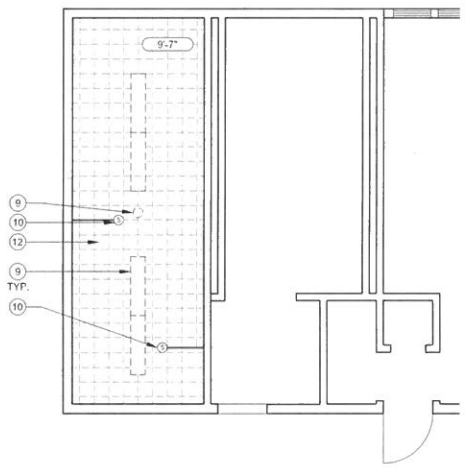

BUILDING D BOOKROOM REFLECTED CEILING PLAN - DEMO (RM.# 226738) | SCALE: 1/4" = 1'-0" | 6

DEMOLITION KEYNOTES

1. DOOR & FRAME TO REMAIN. DOOR HARDWARE TO BE REMOVED
2. DOOR, FRAME, & HARDWARE TO BE REMOVED
3. ELECTRICAL PANEL TO REMAIN
4. WALL CABINET TO BE REMOVED
5. BUILT-IN STORAGE CABINET TO BE REMOVED
6. LAVATORY TO BE REMOVED (SEE 14/P4.10)
7. BASE CABINET & COUNTERTOP TO BE REMOVED
8. PORTION OF WALL TO BE REMOVED
9. LIGHT FIXTURE TO BE REMOVED
10. SMOKE DETECTOR TO BE DETACHED FROM CEILING & PROTECTED IN PLACE (SEE NOTE 3)
11. WALL TO REMAIN
12. GLUED-ON ACOUSTICAL CEILING TILES & MASTIC TO BE REMOVED. LATH & PLASTER TO REMAIN.
13. PHONE JACK TO BE REMOVED
14. PAPER TOWEL DISPENSER TO BE REMOVED
15. MIRROR TO BE REMOVED
16. REFRIGERATOR TO BE REMOVED
17. WALL FURNACE TO BE REMOVED. GAS TO BE REMOVED & CAPPED (SEE PLMG. DWGS.) ELECTRICAL CONNECTION TO BE REMOVED (SEE ELEC. DWGS.) FLUE TO BE REMOVED (SEE MECH. & PLMG. DWGS.)
18. SURFACE MOUNTED ELEC. CONDUIT TO REMAIN
19. PAINTED WOOD BASE TO BE REMOVED
20. PAINTED WOOD TRIM TO BE REMOVED
21. LATH & PLASTER WALL FINISH TO BE REMOVED
22. TELEPHONE TO BE REMOVED
23. PA SPEAKER TO BE REMOVED
24. LIGHT SWITCH TO BE REMOVED (SEE E4.10)
25. WINDOW TO REMAIN
26. LIGHT SWITCH TO REMAIN (SEE ELEC. DWGS)
27. 8" CONCRETE SLAB ON GRADE W/ #5 @ 12" O.C. AND #4 @ 12" O.C. TO BE REMOVED
28. CONCRETE SLAB ON GRADE TO REMAIN
29. AUTOMATIC DOOR CLOSER TO BE REMOVED
30. NOT USED
31. DOOR THRESHOLD TO BE REMOVED
32. PAINTED WOOD WINDOW TRIM TO BE REMOVED
33. ELECTRICAL RECEPTACLE & FACE PLATE TO BE CAPPED (SEE E4.10)
34. WALL ACCESS PANEL TO REMAIN
35. AIR VENT TO BE REMOVED

DEMOLITION LEGEND:

- EXISTING TO REMAIN
- EXISTING TO BE REMOVED
- WALL TO BE REMOVED
- WALL TYPE (SEE NOTE 2)
- FINISH TO BE REMOVED
- CONCRETE SLAB ON GRADE TO BE REMOVED

DEMOLITION NOTES:

1. FOR DEMOLITION NOTES, SEE 3/T-3.
2. FOR (E) WALL TYPE DESIGNATIONS SEE DEMO PLANS. FOR PROPOSED WALL TYPE DESIGNATIONS SEE PROPOSED PLANS. FOR (E) WALL TYPE DETAILS SEE A9.1. FOR PROPOSED WALL TYPE DETAILS SEE A9.2.
3. (E) FIRE ALARM SYSTEM SHALL BE PROTECTED IN PLACE & SHALL REMAIN OPERATIONAL THROUGHOUT THE DURATION OF CONSTRUCTION.

NOTES | SCALE: N.T.S. | 3

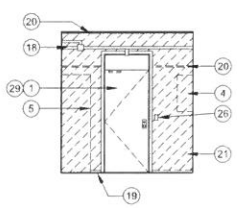

A SOUTH ELEVATION

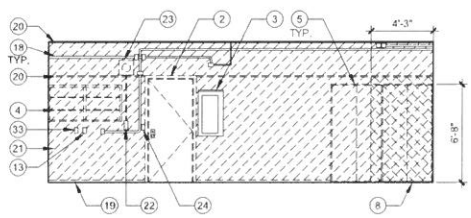

B EAST ELEVATION

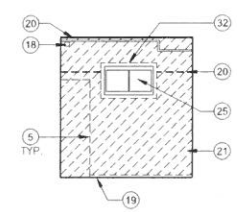

C NORTH ELEVATION

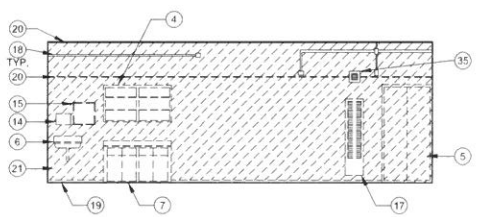

D WEST ELEVATON

BUILDING D BOOKROOM INTERIOR ELEVATIONS - DEMO (RM.# 226738) | SCALE: 1/4"=1'-0" | 8

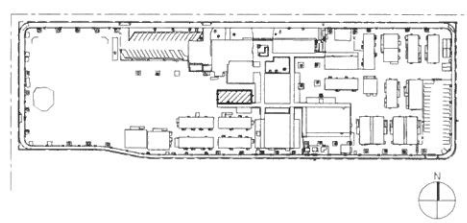

KEY PLAN | SCALE: N.T.S. | 4

DIVISION OF THE STATE ARCHITECT

DSA APP # 03-XXXXXX

LOS ANGELES UNIFIED SCHOOL DISTRICT

ASSET MANAGEMENT FACILITIES SERVICES DIVISION
333 S. BEAUDRY AVENUE, 23RD FLOOR
LOS ANGELES, CALIFORNIA 90017

PROJECT TITLE AND SCHOOL LOCATION

BASSETT STREET ELEMENTARY SCHOOL
15756 BASSETT ST
LAKE BALBOA, CA 91406

VOLUNTARY BARRIER REMOVAL

COLIN NO. 10373370

COMMISSIONED ARCHITECT

Swift Lee Office
1231 N Spring St, Suite B-203
Los Angeles, CA 90012
T. 323.257.8200
www.swiftleeoffice.com

CONSULTANT

STAMPS/SEALS

LICENSED ARCHITECT NATHAN A SWIFT C-28798 03-31-25 RENEWAL DATE STATE OF CALIFORNIA

50% CD	12.20.23
50% CD (PLATFORM LIFT)	02.23.24
100% CD	06.03.24

SHEET TITLE

BUILDING D RESTROOM & CHANGING ROOM PLANS - DEMO

PROJECT NO.: | PROJECT ARCH.
DRAWN: | CHECKED:

SHEET NUMBER

A4.10

DATE | SHEET OF

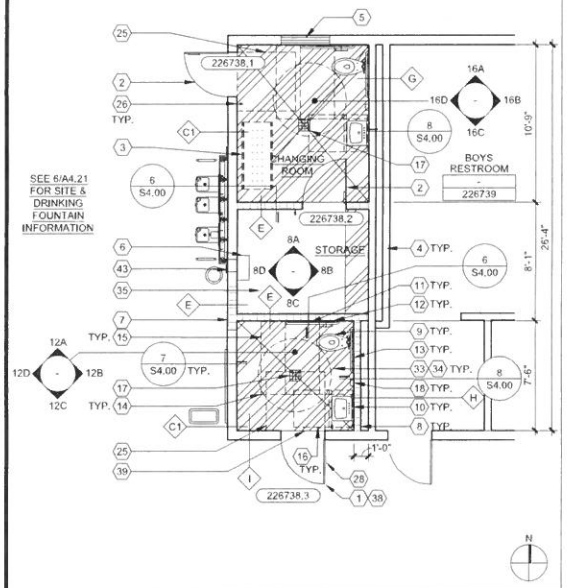

BLDG. D FLOOR PLAN - PROPOSED (RM.# 226738) | SCALE: 1/4" = 1'-0" | 14

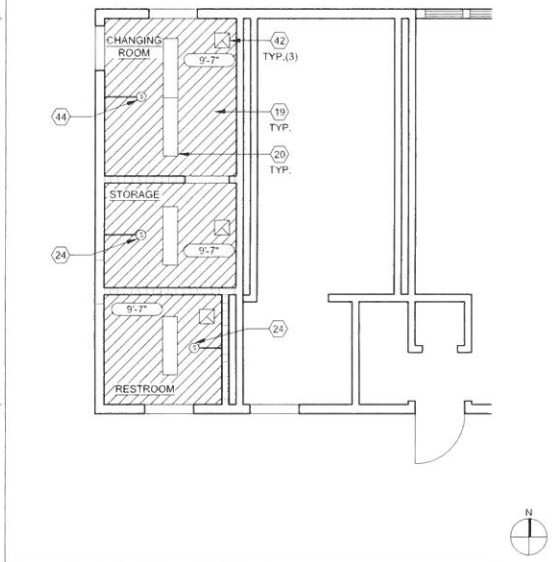

BLDG. D R.C.P. - PROPOSED (RM.# 226738) | SCALE: 1/4" = 1'-0" | 6

MODERNIZATION KEYNOTES

1. (E) DOOR
2. DOOR PER SCHEDULE. (SEE 5/A0.1)
3. STUDENT CHANGING TABLE (O.F.O.I.)
4. (E) WALL
5. (E) WINDOW
6. (E) ELECTRICAL PANEL
7. (E) DOOR OPENING TO BE FILLED
8. PROPOSED WALL (4/S2.00) (SEE 7/S2.01)
9. WATER CLOSET (SEE P4.11)
10. LAVATORY (SEE P4.11)
11. GRAB BAR (SEE 1/A9.12)
12. TOILET PAPER DISPENSER (SEE A9.7)
13. TOILET SEAT COVER DISPENSER (SEE 15/A9.5)
14. 5'-0" DIA. WHEELCHAIR TURNING RADIUS
15. 54" X 60" CLEAR FLOOR SPACE
16. 30" X 40" CLEAR FLOOR SPACE
17. FLOOR DRAIN (SEE P4.11)
18. SOAP DISPENSER (SEE 15/A9.5)
19. PAINTED GYP. BD. OVER (E) LATH & PLASTER
20. LIGHT FIXTURE (SEE E4.11)
21. CERAMIC TILE COVE BASE (SEE 20/A9.2)
22. MIRROR (SEE 15/A9.5)
23. 4"X4" CERAMIC WALL TILE (SEE 1/A0.2)
24. (E) SMOKE DETECTOR REINSTALLED (SEE NOTE 1)
25. 48"W X 48"D MIN. MANEUVERING CLEARANCE ON PUSH SIDE OF DOOR
26. LIGHTING OCCUPANCY SENSOR SWITCH (SEE E4.11)
27. GYPSUM BOARD, PAINTED
28. GEOMETRIC DOOR SYMBOL (SEE 7/A9.11)
29. ALL-GENDER RESTROOM WALL I.D. SIGN (SEE 7/A9.11)
30. 2X WOOD FRAMED WALL W/ GYP. BD. WALL FINISH, PAINTED
31. CLEANOUT (SEE 14/P4.11)
32. WALL ACCESS PANEL (SEE P4.11)
33. CONC. SLAB TO BE DEPRESSED 2"
34. CERAMIC MOSAIC FLOOR TILE OVER FULL MORTAR SETTING BED
35. (E) CONC. SLAB ON GRADE
36. SMOKE DETECTOR (SEE 6/FA4.11)
37. NOT USED
38. AUTOMATIC DOOR CLOSER & LOCKSET TO BE REPLACED
39. DOOR THRESHOLD TO BE REPLACED (SEE 6/A9.7)
40. PAINTED WOOD WINDOW TRIM
41. 4" RUBBER BASE
42. CEILING MOUNTED EXHAUST FAN (SEE M4.11)
43. 10" X 8" OUTSIDE AIR INTAKE LOUVER (SEE M4.11)
44. SMOKE DETECTOR (SEE 6/FA4.11)
45. ELECTRICAL OUTLET (SEE 14/4.11)

MODERNIZATION NOTES:

1. (E) FIRE ALARM SYSTEM SHALL BE PROTECTED IN PLACE & SHALL REMAIN OPERATIONAL THROUGHOUT THE DURATION OF CONSTRUCTION.
2. PROVIDE GEOMETRIC DOOR SYMBOL ON BOTH SIDES OF RESTROOM DOOR
3. FOR TILE DESIGN, SEEA9.13

LEGEND:

- EXISTING
- 2X4 WALL
- PROPOSED WALL
- FINISH TO BE REPLACED
- CONC. SLAB ON GRADE (SEE STRUCT. DWGS.) SLOPE TO DRAIN @ 1/8" PER FOOT MAX.
- WALL TYPE (SEE 4/T-2 NOTE #5)

NOTES | SCALE: N.T.S. | 2

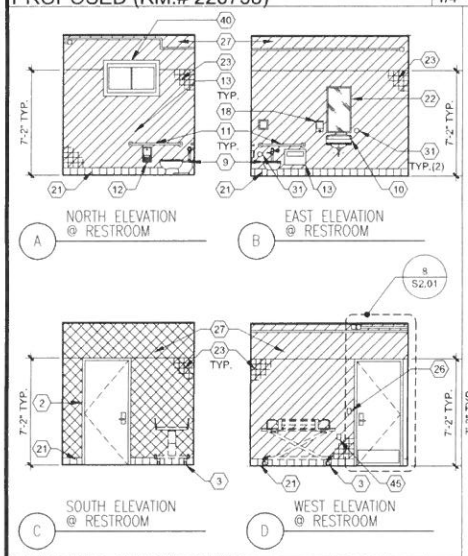

INTERIOR ELEVATIONS - PROPOSED (RM.# 226738) | SCALE: 1/4" = 1'-0" | 16

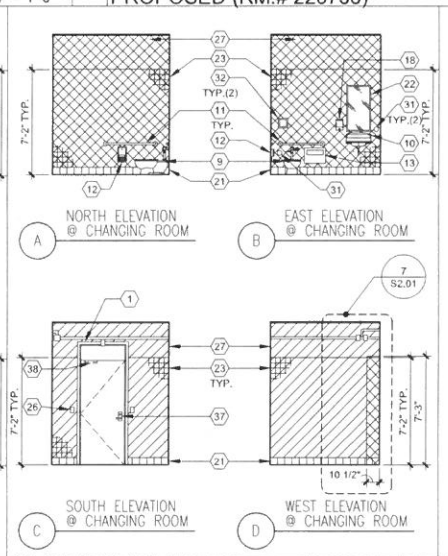

INTERIOR ELEVATIONS - PROPOSED (RM.# 226738) | SCALE: 1/4" = 1'-0" | 12

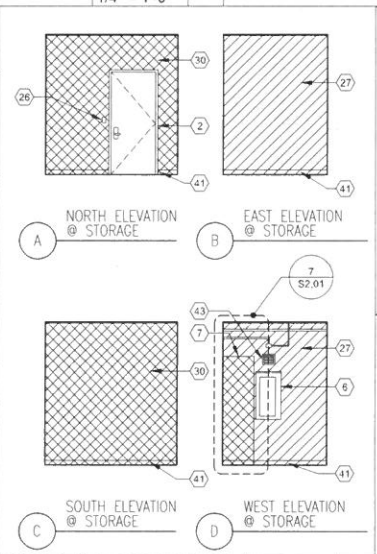

INT. ELEV. - PROPOSED (RM.# 226738) | SCALE: 1/4" = 1'-0" | 8

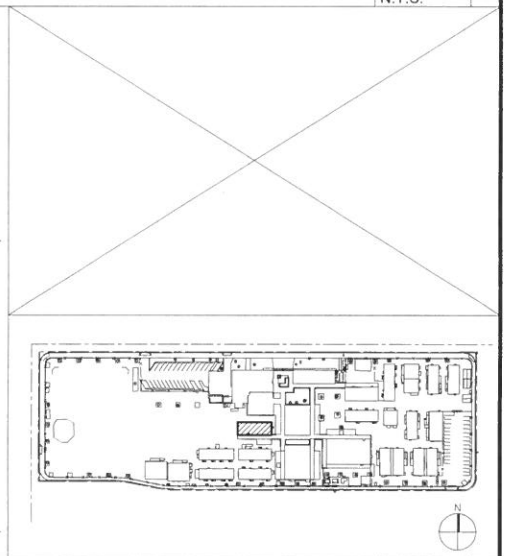

KEY PLAN | SCALE: N.T.S. | 4

DIVISION OF THE STATE ARCHITECT

DSA APP # 03-XXXXXX

LOS ANGELES UNIFIED SCHOOL DISTRICT

ASSET MANAGEMENT FACILITIES SERVICES DIVISION
333 S. BEAUDRY AVENUE, 23RD FLOOR
LOS ANGELES, CALIFORNIA 90017

PROJECT TITLE AND SCHOOL LOCATION

BASSETT STREET ELEMENTARY SCHOOL
15756 BASSETT ST
LAKE BALBOA, CA 91406

VOLUNTARY BARRIER REMOVAL

COLIN NO: 10373370

COMMISSIONED ARCHITECT

Swift Lee Office
1231 N Spring St, Suite B-203
Los Angeles, CA 90012
T. 323.257.8200
www.swiftleeoffice.com

CONSULTANT

STAMPS/SEALS

LICENSED ARCHITECT NATHAN A. SWIFT C-28798 03-31-25 RENEWAL DATE STATE OF CALIFORNIA

50% CD	12.20.23
50% CD (PLATFORM LIFT)	02.23.24
100% CD	06.03.24

SHEET TITLE:

BUILDING D RESTROOM & CHANGING ROOM PLANS - PROPOSED

PROJECT NO.: | PROJECT ARCH.
DRAWN: | CHECKED:

SHEET NUMBER

A4.11

DATE: | SHEET: OF:

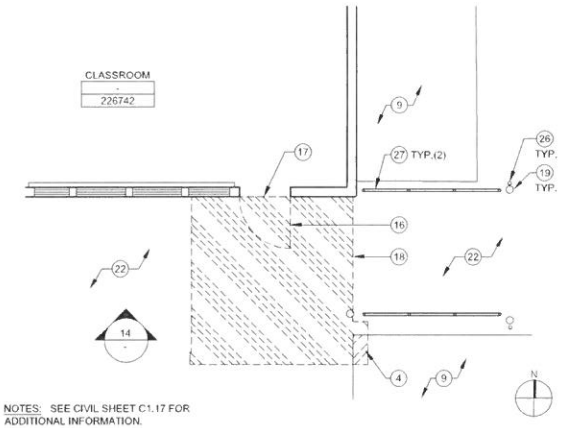

NOTES: SEE CIVIL SHEET C1.17 FOR ADDITIONAL INFORMATION.

BLDG. D CLASSROOM PLAN - DEMO (RM.# 226742) | SCALE: 1/4" = 1'-0" | 13

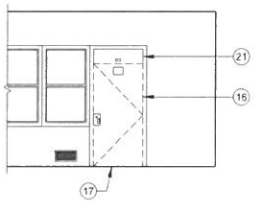

BLDG. D CLASSROOM ELEVATIONS - DEMO (RM.# 226742) | SCALE: 1/4" = 1'-0" | 14

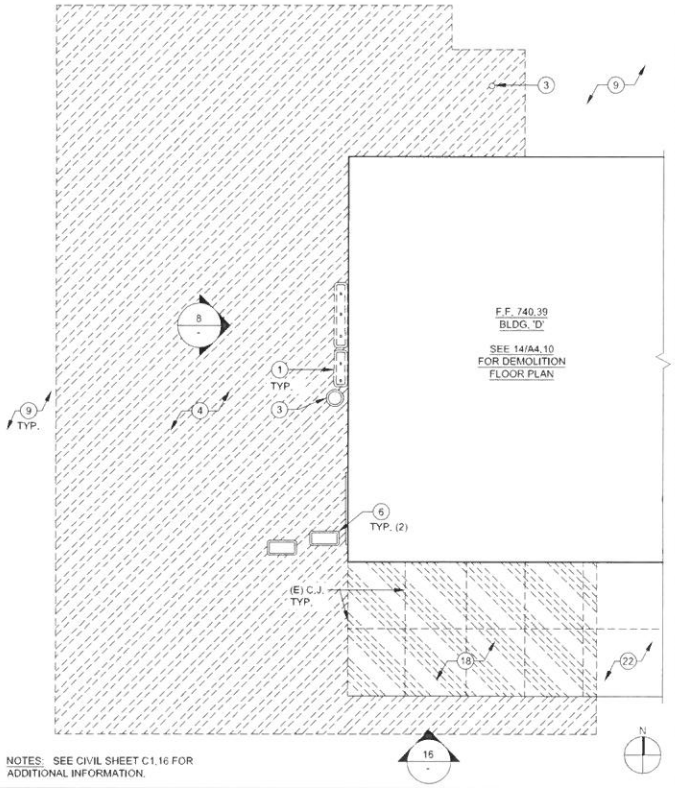

NOTES: SEE CIVIL SHEET C1.16 FOR ADDITIONAL INFORMATION.

BUILDING D DRINKING FOUNTAIN PLAN - DEMO | SCALE: 1/4" = 1'-0" | 6

DEMOLITION KEYNOTES:

1. DRINKING FOUNTAIN TO BE REMOVED
2. SEWER CLEAN OUT TO REMAIN
3. ELECTRICAL GROUND BOX TO REMAIN
4. A.C. PAVEMENT TO BE REMOVED (SEE C1.16)
5. CLEAN OUT TO BE REMOVED
6. WATER VALVE GROUND BOX TO REMAIN (SEE C1.16)
7. PORTION OF WALL TO BE REMOVED
8. DOOR, HARDWARE & FRAME TO BE REMOVED
9. A.C. PAVEMENT TO REMAIN (SEE C1.16)
10. CEMENT PLASTER & LATH TO BE REMOVED
11. DIRECTIONAL SIGN TO REMAIN
12. ELECTRICAL CONDUIT TO REMAIN
13. CLOCK TO REMAIN
14. EXTERIOR LIGHT FIXTURE TO REMAIN
15. FIRE ALARM DEVICE TO REMAIN
16. DOOR & HARDWARE TO BE REMOVED, FRAME TO REMAIN
17. DOOR THRESHOLD TO BE REMOVED
18. CONCRETE PAVEMENT TO BE REMOVED (SEE C1.16)
19. STRUCTURAL COLUMN TO REMAIN
20. HARDWARE TO BE REMOVED, DOOR & FRAME TO REMAIN
21. FIXED TRANSOM PANEL TO REMAIN
22. CONC. PAVEMENT TO REMAIN (SEE C1.16)
23. DOOR, HARDWARE, FRAME, & THRESHOLD TO REMAIN
24. HOSE BIB TO REMAIN
25. CLEANOUT TO REMAIN (SEE C1.16)
26. DOWNSPOUT TO REMAIN
27. STEEL PIPE GUARDRAIL TO REMAIN

DEMOLITION NOTES:

1. (E) FIRE ALARM SYSTEM SHALL BE PROTECTED IN PLACE & SHALL REMAIN OPERATIONAL THROUGHOUT THE DURATION OF CONSTRUCTION

DEMOLITION LEGEND:

- EXISTING TO REMAIN
- EXISTING TO BE REMOVED
- WALL TO BE REMOVED
- WALL TYPE
- FINISH TO BE REMOVED
- AC PAVEMENT TO BE REMOVED
- CONCRETE PAVEMENT TO BE REMOVED

NOTES | SCALE: N.T.S. | 3

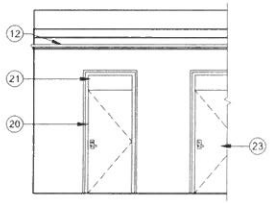

BLDG. D CLASSROOM ELEVATIONS - DEMO (RM.# 226738) | SCALE: 1/4" = 1'-0" | 16

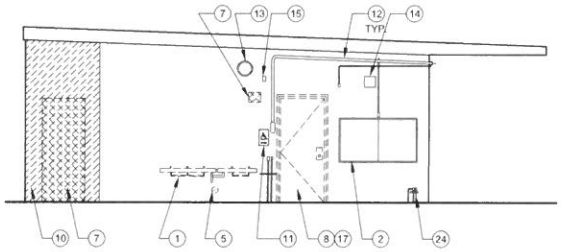

BUILDING D DRINKING FOUNTAIN ELEVATION - DEMO | SCALE: 1/4"=1'-0" | 8

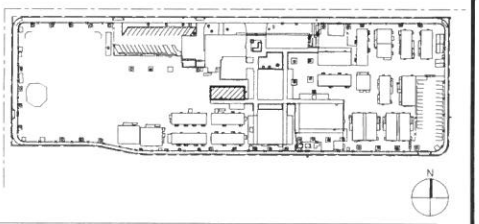

KEY PLAN | SCALE: N.T.S. | 4

DIVISION OF THE STATE ARCHITECT

DSA APP # 03-XXXXXX

LOS ANGELES UNIFIED SCHOOL DISTRICT

ASSET MANAGEMENT FACILITIES SERVICES DIVISION
333 S. BEAUDRY AVENUE, 23RD FLOOR
LOS ANGELES, CALIFORNIA 90017

PROJECT TITLE AND SCHOOL LOCATION

BASSETT STREET ELEMENTARY SCHOOL
15756 BASSETT ST
LAKE BALBOA, CA 91406

VOLUNTARY BARRIER REMOVAL

COLIN NO: 10373370

COMMISSIONED ARCHITECT

Swift Lee Office
1231 N Spring St, Suite B-203
Los Angeles, CA 90012
T: 323.257.8200
www.swiftleeoffice.com

CONSULTANT

STAMPS/SEALS

LICENSED ARCHITECT NATHAN A. SWIFT C-28798 03-31-25 RENEWAL DATE STATE OF CALIFORNIA

50% CD	12.20.23
50% CD (PLATFORM LIFT)	02.23.24
100% CD	06.03.24

SHEET TITLE

BUILDING D SITE DETAILS & EXTERIOR ELEVATIONS DEMO

PROJECT NO.: | PROJECT ARCH.
DRAWN: | CHECKED:

SHEET NUMBER

A4.20

DATE | SHEET OF

NOTE: SURFACE SLOPES ARE APPROXIMATE. SEE SHEET C1.17 FOR EXACT SLOPES AND FOR ADDITIONAL INFORMATION.

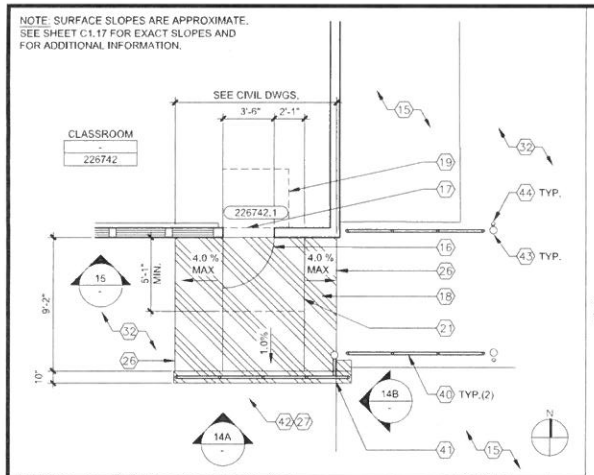

BLDG. D CLASSROOM PLAN - PROPOSED (RM.# 226742) | SCALE: 1/4" = 1'-0" | 13

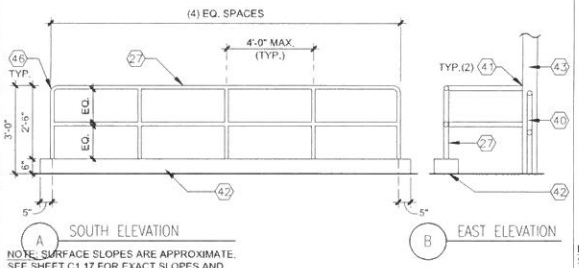

NOTE: SURFACE SLOPES ARE APPROXIMATE. SEE SHEET C1.17 FOR EXACT SLOPES AND FOR ADDITIONAL INFORMATION.

STEEL PIPE GUARDRAIL DETAILS | SCALE: 1/2" = 1'-0" | 14

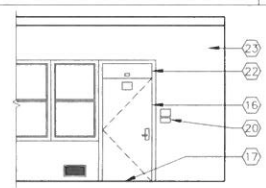

BLDG. D CLASSROOM ELEVATION - PROPOSED (RM.# 226742) | SCALE: 1/4" = 1'-0" | 15

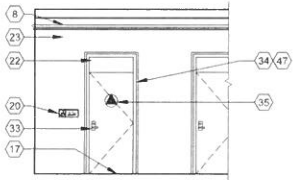

BLDG. D CLASSROOM ELEVATION - PROPOSED (RM.# 226738) | SCALE: 1/4" = 1'-0" | 16

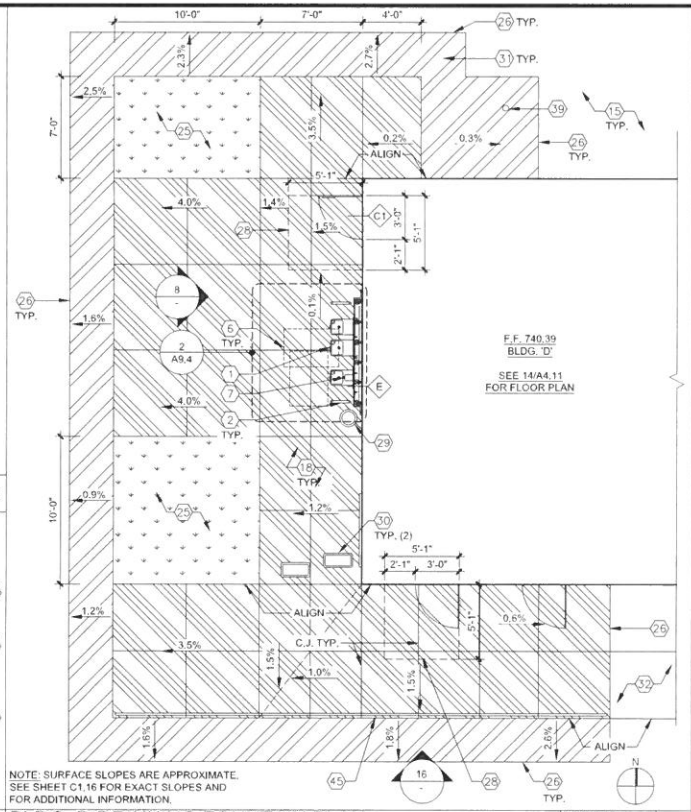

NOTE: SURFACE SLOPES ARE APPROXIMATE. SEE SHEET C1.16 FOR EXACT SLOPES AND FOR ADDITIONAL INFORMATION.

BLDG. D DRINKING FOUNTAIN PLAN - PROPOSED | SCALE: 1/4" = 1'-0" | 6

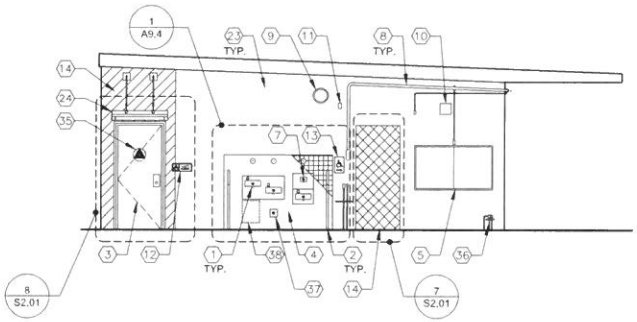

BLDG. D DRINKING FOUNTAIN ELEVATIONS - PROPOSED | SCALE: 1/4"=1'-0" | 8

MODERNIZATION KEYNOTES:

1. DRINKING FOUNTAIN
2. WING GUARD (SEE 12/A9.4)
3. DOOR, FRAME & HARDWARE PER SCHED. (SEE A0.1)
4. FURRED WALL (SEE 4/A9.2)
5. (E) DISPLAY CASE
6. 30" X 48" CLEAR FLOOR SPACE. SURFACE SLOPE NOT TO EXCEED 1.5% IN ANY DIRECTION.
7. BOTTLE FILLER (11/A9.4)
8. (E) ELECTRICAL CONDUIT
9. (E) CLOCK
10. (E) EXTERIOR LIGHT FIXTURE
11. (E) FIRE ALARM DEVICE (SEE NOTE 1)
12. SIGNAGE (SEE 15/A9.11)
13. (E) DIRECTIONAL SIGN
14. CEMENT PLASTER WALL FINISH OVER PLYWOOD TO MATCH EXISTING, PAINTED
15. (E) A.C. PAVEMENT (SEE C1.16)
16. (E) DOOR & HARDWARE TO BE REPLACED. DOOR FRAME TO BE MODIFIED IN ORDER TO REVERSE SWING SO THAT HINGES ARE ON OPPOSITE SIDE (SEE A0.1)
17. DOOR THRESHOLD TO BE REPLACED WITH LOW PROFILE TYPE. (SEE 6A/A9.7)
18. CONC. PAVEMENT (SEE C1.16)
19. 55"W X 61"D MIN. MANEUVERING CLEARANCE ON PUSH SIDE OF DOOR
20. ROOM ID SIGN (SEE 9/A9.11)
21. 67"W X 61"D MIN. MANEUVERING CLEARANCE ON PULL SIDE OF DOOR
22. (E) FIXED TRANSOM
23. (E) CEMENT PLASTER WALL FINISH TO BE PAINTED FROM CORNER TO CORNER AND FROM GROUND TO ROOF
24. DOOR CANOPY (SEE 15/A9.10)
25. PLANTER
26. JOIN FLUSH WITH EXISTING
27. STEEL PIPE GUARDRAIL (SEE 13/A9.8)
28. 61"W X 61"D MIN. MANEUVERING CLEARANCE ON PULL SIDE OF DOOR
29. (E) ELECTRICAL GROUND BOX. ADJUST TO GRADE (SEE C1.16)
30. (E) WATER VALVE BOX. ADJUST TO GRADE (SEE C1.16)
31. AC PAVEMENT (SEE C1.16)
32. (E) CONC. PAVEMENT
33. LOCKSET TO BE REPLACED
34. (E) DOOR
35. GEOMETRIC DOOR SYMBOL (SEE 9/A9.11)
36. (E) HOSE BIB
37. HOSE BIB
38. ACCESS PANEL
39. (E) CLEANOUT ADJUST TO GRADE (SEE C1.16)
40. (E) STEEL PIPE GUARDRAIL
41. PIPE RAIL WELDED TO (E) COLUMN. GRIND WELD SMOOTH. PRIME & PAINT AFFECTED AREA W/ ZINC-RICH COLD GALVANIZING PAINT. RE-PAINT ENTIRE COLUMN WITH COLOR TO MATCH EXISTING.
42. 6" HIGH CONCRETE CURB
43. (E) STRUCTURAL COLUMN
44. (E) DOWNSPOUT
45. STEEL PIPE GUARDRAIL (SEE 1/A9.8 WITHOUT PICKETS)
46. 3" OUTSIDE RADIUS
47. (E) DOOR FRAME

MODERNIZATION NOTES:

1. (E) FIRE ALARM SYSTEM SHALL BE PROTECTED IN PLACE & SHALL REMAIN OPERATIONAL THROUGHOUT THE DURATION OF CONSTRUCTION

MODERNIZATION LEGEND:

- EXISTING
- AC PAVEMENT (SEE CIVIL DWGS.)
- WALL TO BE REPLACED
- WALL TYPE (SEE 4/T-2 NOTE #5)
- FINISH TO BE REPLACED
- CONC. PAVEMENT (SEE CIVIL DWGS.)
- PLANTING BED (SEE LANDSCAPE DWGS.)

NOTES | SCALE: N.T.S. | 3

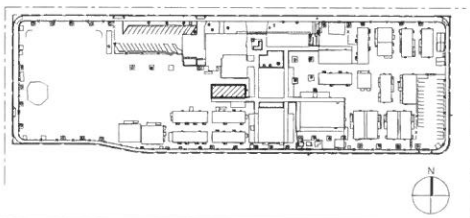

KEY PLAN | SCALE: N.T.S. | 4

DIVISION OF THE STATE ARCHITECT

DSA APP # 03-XXXXXX

LOS ANGELES UNIFIED SCHOOL DISTRICT

ASSET MANAGEMENT FACILITIES SERVICES DIVISION
333 S. BEAUDRY AVENUE, 23RD FLOOR
LOS ANGELES, CALIFORNIA 90017

PROJECT TITLE AND SCHOOL LOCATION

BASSETT STREET ELEMENTARY SCHOOL
15758 BASSETT ST
LAKE BALBOA, CA 91406

VOLUNTARY BARRIER REMOVAL

COLIN NO: 10373370

COMMISSIONED ARCHITECT

Swift Lee Office
1231 N Spring St. Suite B-203
Los Angeles, CA 90012
T. 323.257.8200
www.swiftleeoffice.com

CONSULTANT

STAMPS/SEALS

LICENSED ARCHITECT NAHAN A SWIFT C-28798 03-31-25 RENEWAL DATE STATE OF CALIFORNIA

50% CD	12.20.23
50% CD (PLATFORM LIFT)	02.23.24
100% CD	06.03.24

SHEET TITLE

BUILDING D SITE DETAILS & EXTERIOR ELEVATIONS PROPOSED

PROJECT NO.: | PROJECT ARCH.
DRAWN: | CHECKED:
SHEET NUMBER

A4.21

DATE: | SHEET: OF

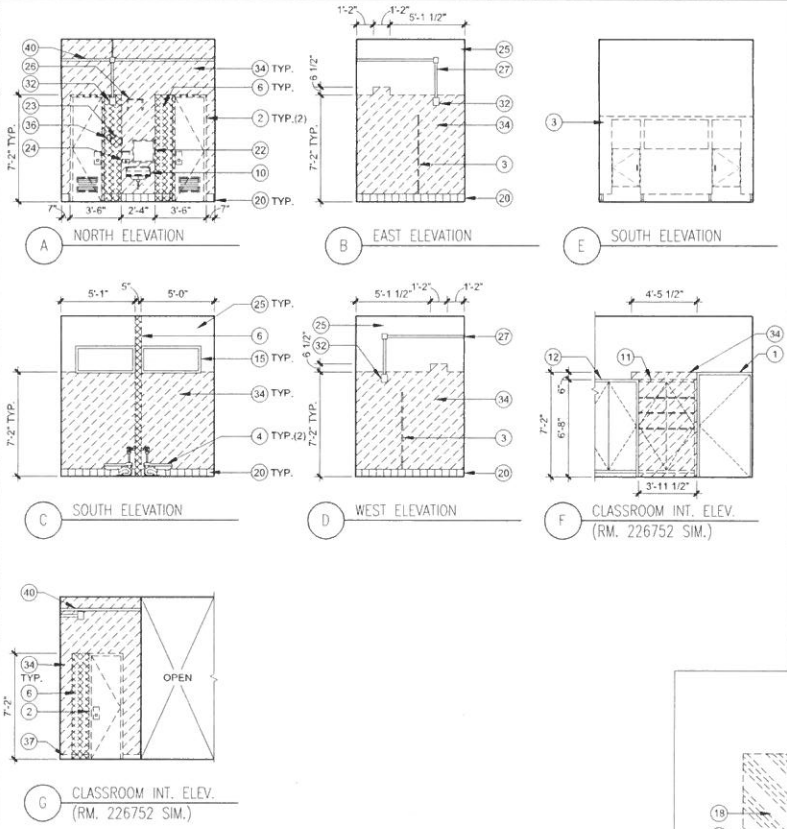

KINDERGARTEN BLDG. RESTROOM INTERIOR ELEVS. DEMO (RM.# 226750) | SCALE: 1/4" = 1'-0" | 14

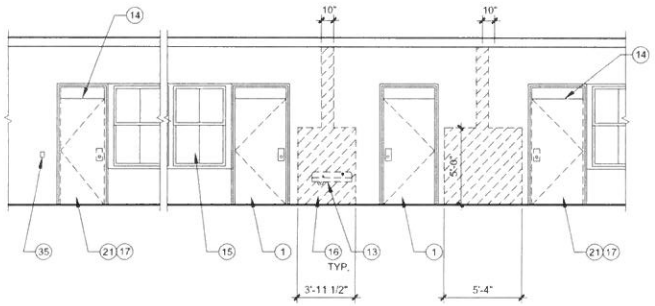

KINDERGARTEN BLDG. FRONT ELEVATION - DEMO | SCALE: 1/4"=1'-0" | 16

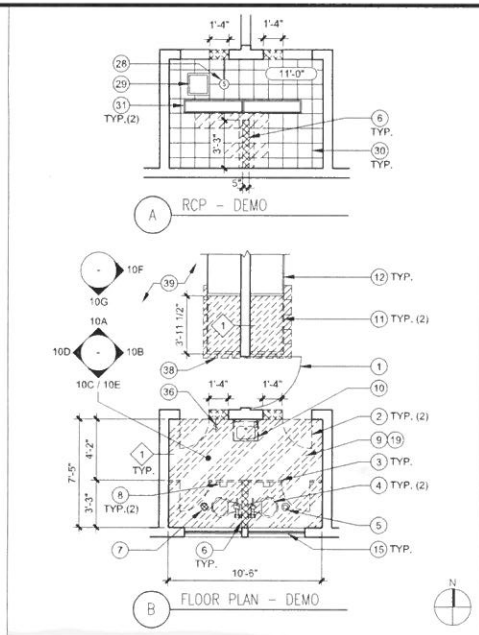

KINDERGARTEN BLDG. R.R. PLANS - DEMO (RM.# 226750) | SCALE: 1/4" = 1'-0" | 6

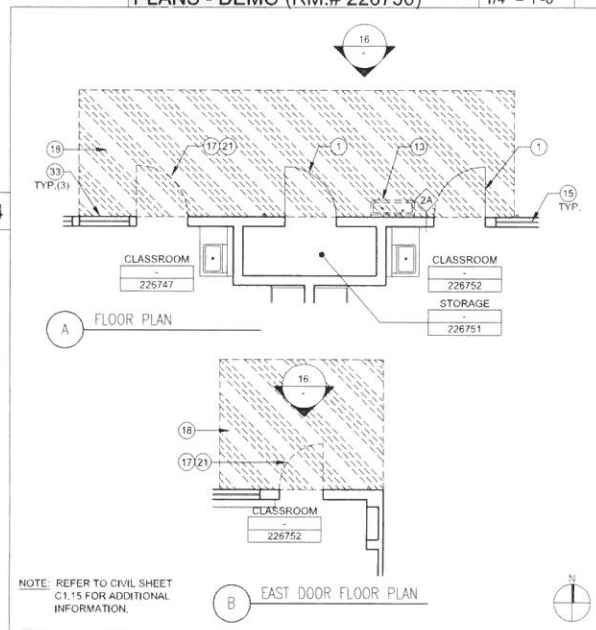

NOTE: REFER TO CIVIL SHEET C1.15 FOR ADDITIONAL INFORMATION.

KINDERGARTEN BLDG. PLANS - DEMO | SCALE: 1/4"=1'-0" | 8

DEMOLITION KEYNOTES:

1. DOOR, FRAME, AND HARDWARE TO REMAIN
2. DOOR, FRAME, AND HARDWARE TO BE REMOVED
3. FLOOR MOUNTED WALL PARTITION TO BE REMOVED
4. WATER CLOSET TO BE REMOVED
5. CLEAN OUT TO BE REMOVED. SEE P2.10
6. PORTION OF WALL TO BE REMOVED
7. FLOOR DRAIN TO BE REMOVED
8. TOILET PAPER DISPENSER TO BE REMOVED
9. MIXED SIZE CERAMIC MOSAIC FLOOR TILE TO BE REMOVED
10. LAVATORY TO BE REMOVED
11. PORTION OF BUILT-IN STORAGE CABINET TO BE REMOVED
12. PORTION OF BUILT-IN STORAGE CABINET TO REMAIN
13. DRINKING FOUNTAIN TO BE REMOVED.
14. DOOR TRANSOM TO REMAIN
15. WINDOW TO REMAIN
16. CEMENT PLASTER & LATH TO BE REMOVED
17. DOOR THRESHOLD TO BE REMOVED
18. CONCRETE PAVEMENT TO BE REMOVED (SEE C1.26)
19. 8" CONC. SLAB ON GRADE W/ #5 @ 12" O.C. & #4 @ 12" O.C. TO BE REMOVED
20. CERAMIC TILE COVE BASE TO BE REMOVED
21. DOOR FRAME TO REMAIN, DOOR & HARDWARE TO BE REMOVED
22. MIRROR TO BE REMOVED
23. PAPER TOWEL DISPENSER TO BE REMOVED
24. SOAP DISPENSER TO BE REMOVED
25. LATH & PLASTER WALL FINISH TO REMAIN
26. SHELF TO BE REMOVED
27. SURFACE MOUNTED ELECTRICAL CONDUIT TO REMAIN
28. SMOKE DETECTOR & SURFACE-MOUNTED CONDUIT TO REMAIN (SEE NOTE 1)
29. CEILING ACCESS PANEL TO REMAIN
30. GLUED-ON ACOUSTICAL CEILING TILES TO REMAIN
31. LIGHT FIXTURE TO REMAIN
32. FIRE ALARM HORN-STROBE TO BE DETACHED FROM WALL & PROTECTED IN PLACE (SEE NOTE 1)
33. DOOR STOP TO BE REMOVED
34. LATH & PLASTER WALL FINISH TO BE REMOVED
35. WALL OUTLET TO REMAIN
36. ELECTRICAL SWITCH TO BE REMOVED
37. WOOD BASE TO BE REMOVED
38. 12"X12" VCT FLOORING TO BE REMOVED
39. 12"X12" VCT FLOORING TO REMAIN
40. SURFACE-MOUNTED ELECTRICAL CONDUIT TO BE REMOVED & SAVED FOR RE-USE

DEMOLITION LEGEND:

- EXISTING TO REMAIN
- EXISTING TO BE REMOVED
- WALL TO BE REMOVED
- WALL TYPE (SEE NOTE 3)
- FINISH TO BE REMOVED
- AC PAVEMENT TO BE REMOVED
- CONCRETE PAVEMENT TO BE REMOVED
- CONCRETE SLAB ON GRADE TO BE REMOVED

DEMOLITION NOTES:

1. (E) FIRE ALARM SYSTEM SHALL BE PROTECTED IN PLACE & SHALL REMAIN OPERATIONAL THROUGHOUT THE DURATION OF CONSTRUCTION
2. FOR DEMOLITION NOTES, SEE 3/T-3
3. FOR (E) WALL TYPE DESIGNATIONS REFER TO DEMO. PLANS. FOR PROPOSED WALL TYPE DESIGNATIONS REFER TO PROPOSED FLOOR PLANS. FOR (F) WALL TYPE DETAILS REFER TO A9.1 & PROPOSED WALL TYPE DETAILS REFER TO A9.2.

NOTES | SCALE: N.T.S. | 3

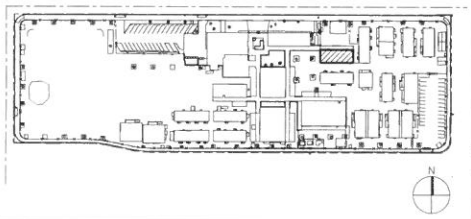

KEY PLAN | SCALE: N.T.S. | 4

DIVISION OF THE STATE ARCHITECT

DSA APP # 03-XXXXXX

LOS ANGELES UNIFIED SCHOOL DISTRICT

ASSET MANAGEMENT FACILITIES SERVICES DIVISION
333 S. BEAUDRY AVENUE, 23RD FLOOR
LOS ANGELES, CALIFORNIA 90017

PROJECT TITLE AND SCHOOL LOCATION

BASSETT STREET ELEMENTARY SCHOOL
15756 BASSETT ST
LAKE BALBOA, CA 91406

VOLUNTARY BARRIER REMOVAL

COLIN NO: 10373370

COMMISSIONED ARCHITECT

Swift Lee Office
1231 N Spring St, Suite B-203
Los Angeles, CA 90012
T. 323.257.8200
www.swiftleeoffice.com

CONSULTANT

STAMPS/SEALS

LICENSED ARCHITECT NATHAN A SWIFT C-28798 03-31-25 RENEWAL DATE STATE OF CALIFORNIA

50% CD	12.20.23
50% CD (PLATFORM LIFT)	02.23.24
100% CD	06.03.24

SHEET TITLE

KINDERGARTEN BLDG. CLASSROOM & RESTROOM PLANS - DEMO

PROJECT NO.: | PROJECT ARCH.
DRAWN: | CHECKED:
SHEET NUMBER

A2.10

DATE: | SHEET: OF:

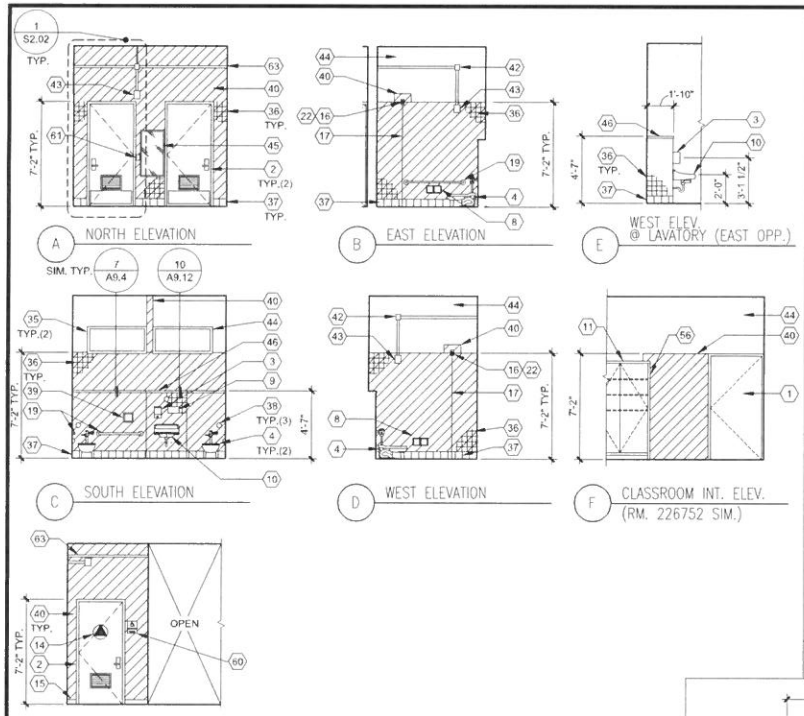

KINDERGARTEN BLDG. RESTROOM INTERIOR ELEVS. PROPOSED (RM.# 226750) | SCALE: 1/4" = 1'-0" | 14

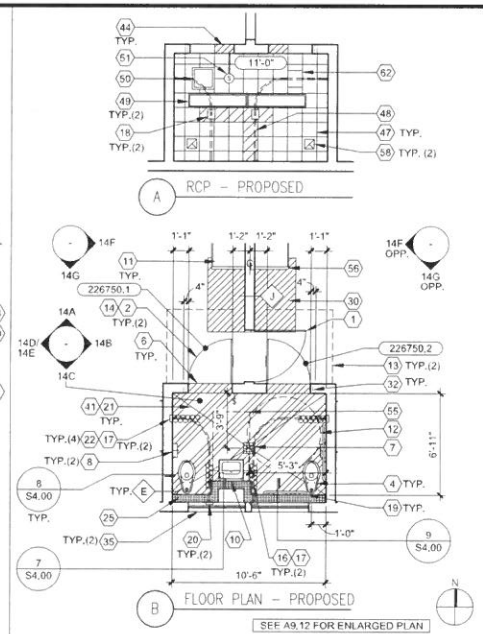

KINDERGARTEN BLDG. R.R. PLANS - PROPOSED (RM.# 226750) | SCALE: 1/4" = 1'-0" | 6

MODERNIZATION KEYNOTES

1. (E) DOOR, FRAME, AND HARDWARE
2. DOOR, FRAME & HARDWARE PER SCHED. (SEE A0.1)
3. SOAP DISPENSER (SEE15/A9.5)
4. WATER CLOSET (SEE 1/A9.5)
5. NOT USED
6. (E) DOOR, OPENING, TO BE ENLARGED
7. FLOOR DRAIN (SEE P2.11)
8. TOILET PAPER DISPENSER (SEE A9.7)
9. PAPER TOWEL DISPENSER (SEE 15/A9.5)
10. LAVATORY (2/A9.5)
11. (E) BUILT-IN STORAGE CABINET
12. 5'-0"DIA. WHEELCHAIR TURNING RAD.
13. 54" X 60" CLEAR FLOOR SPACE
14. GEOMETRIC DOOR SYMBOL (SEE 7/A9.11)
15. WOOD BASE TO MATCH EXISTING
16. CUSTOM CURVED S.S. SHR. CURTAIN ROD, 1" O.D. SEAMLESS S.S. TUBING WITH SATIN FINISH, SEE 2 & 4/A9.12
17. ANTIBACTERIAL & ANTIMICROBIAL MILDEW RESISTANT 'SEE THROUGH TOP' CLR./ WHITE VINYL SHR. CURTAIN
18. CEILING BLOCKING (SEE A9.12)
19. GRAB BAR (SEE 1/A9.5)
20. WOOD BLOCKING ON WALL (SEE 2/A9.12)
21. CERAMIC MOSAIC FLOOR TILE OVER FULL MORTAR SETTING BED
22. FOR CURTAIN ROD ATTACHMENT DETAIL, SEE 2 & 4/A9.12
23. CERAMIC TILE OVER 5/8" CEMENT. BOARD
24. ACCESSIBLE DRINKING FOUNTAIN (ELEMENTARY)
25. FURRED WALL
26. WING GUARD (SEE 12/A9.4)
27. 30" X 48" CLEAR FLOOR SPACE FOR PARALLEL APPROACH. SURFACE SLOPE NOT TO EXCEED 1.5% IN ANY DIRECTION.
28. BOTTLE FILLER W/ CUP HOLDER (SEE 14/A9.4)
29. (E) DOOR & FRAME
30. VINYL FLOORING TO MATCH EXISTING
31. DOOR THRESHOLD TO BE REPLACED WITH LOW PROFILE TYPE. (SEE 6A/A9.7)
32. PORTION OF (E) WALL TO BE FILLED
33. 48"W X 48"D MIN. MANEUVERING CLEARANCE ON PUSH SIDE OF DOOR
34. 60"W X 60"D MIN. MANEUVERING CLEARANCE ON PULL SIDE OF DOOR
35. (E) WINDOW
36. 4"X4" CERAMIC WALL TILE (SEE 1/A0.2)
37. CERAMIC TILE COVE BASE (SEE 20/A9.2)
38. CLEANOUT (SEE P2.11)
39. WALL ACCESS PANEL (SEE P2.11)
40. LATH & PLASTER, PAINTED, TO MATCH EXISTING
41. CONC. SLAB ON GRADE
42. (E) SURFACE MOUNTED ELECTRICAL CONDUIT
43. (E) FIRE ALARM HORN-STROBE TO BE REINSTALLED (SEE NOTE 1)
44. (E) LATH & PLASTER TO BE PATCHED & PAINTED AS REQD.
45. MIRROR (SEE 12/A9.6)
46. 1/2" SOLID SURFACE & SQUARE NOSING (SEE 10/A9.12)
47. (E) GLUED-ON CEILING TILES
48. CEILING TO MATCH EXISTING
49. (E) LIGHT FIXTURE
50. (E) CEILING ACCESS PANEL
51. (E) SMOKE DETECTOR (SEE NOTE 1)
52. (E) DOOR & HARDWARE TO BE REPLACED. DOOR FRAME TO BE MODIFIED IN ORDER TO REVERSE SWING SO THAT HINGES ARE ON OPPOSITE SIDE
53. ROOM ID SIGN (SEE 9/A9.11)
54. FRAMED AP FOR FUTURE WATER FILTER
55. 30" X 48" CLEAR FLOOR SPACE
56. REPAIR & PROVIDE FIXED END PANEL FOR CABINET TO MATCH (E) PANEL
57. WOOD BASE TO MATCH (E)
58. EXHAUST AIR REGISTER, SEE MECHANICAL DWGS. M2.11
59. (E) WALL OUTLET
60. ACCESSIBLE RESTROOM SIGN (SEE 13/A9.11)
61. OCCUPANCY SENSOR WALL SWITCH (SEE 6/E2.11)
62. EXHAUST FAN (SEE 6/M2.11)
63. (E) SURFACE MOUNTED ELEC. CONDUIT TO BE REINSTALLED

MODERNIZATION NOTES:

1. (E) FIRE ALARM SYSTEM SHALL BE PROTECTED IN PLACE & SHALL REMAIN OPERATIONAL THROUGHOUT THE DURATION OF CONSTRUCTION
2. PROVIDE GEOMETRIC DOOR SYMBOL ON BOTH SIDES OF RESTROOM DOOR
3. FOR TILE DESIGN, SEE A9.13

MODERNIZATION LEGEND:

- EXISTING
- 2X4 WALL W/ 5/8" GYP. BD. BOTH SIDES
- 2X6 WALL (U.O.N.)
- WALL TO BE REPLACED IN ENTIRETY
- WALL TYPE (SEE 4/T-2 NOTE #5)
- FINISH TO BE REPLACED
- CONC. SLAB ON GRADE (SEE CIVIL DWGS.)
- CONC. SLAB ON GRADE (SEE STRUCT. DWGS.) SLOPE TO DRAIN @ 1/8" PER FOOT MAX.

NOTES | SCALE: N.T.S. | 3

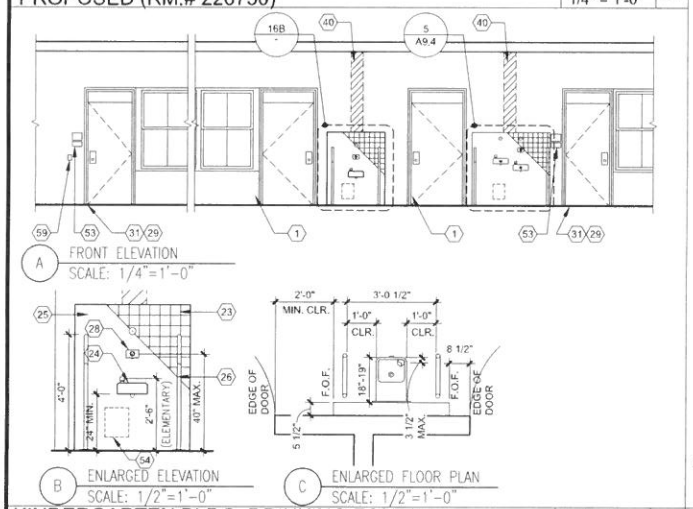

KINDERGARTEN BLDG. DRINKING FOUNTAIN PLANS & ELEVATION - PROPOSED | SCALE: VARIES | 16

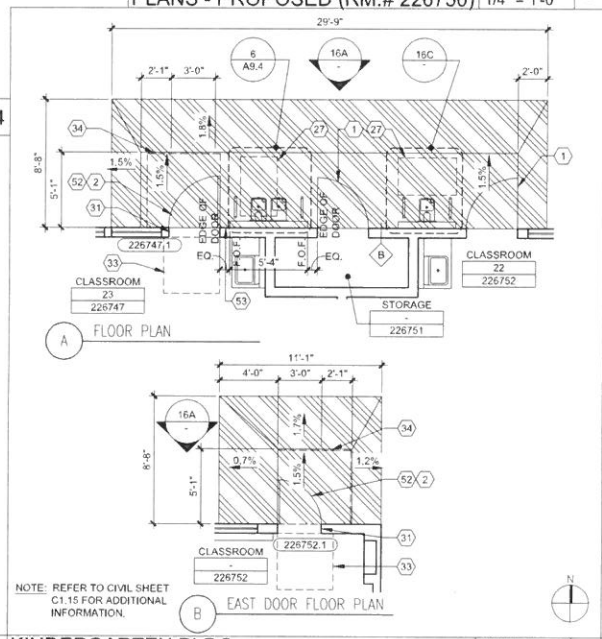

NOTE: REFER TO CIVIL SHEET C1.15 FOR ADDITIONAL INFORMATION.

KINDERGARTEN BLDG. PLANS - PROPOSED | SCALE: 1/4"=1'-0" | 8

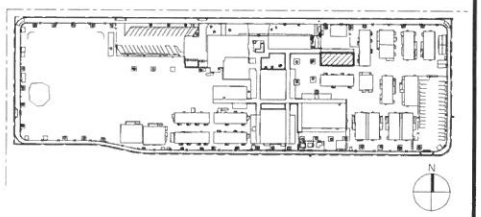

KEY PLAN | SCALE: N.T.S. | 4

DIVISION OF THE STATE ARCHITECT

DSA APP # 03-XXXXXX

LOS ANGELES UNIFIED SCHOOL DISTRICT

ASSET MANAGEMENT FACILITIES SERVICES DIVISION
333 S. BEAUDRY AVENUE, 23RD FLOOR
LOS ANGELES, CALIFORNIA 90017

PROJECT TITLE AND SCHOOL LOCATION

BASSETT STREET ELEMENTARY SCHOOL
15756 BASSETT ST
LAKE BALBOA, CA 91406

VOLUNTARY BARRIER REMOVAL

COLIN NO: 10373370

COMMISSIONED ARCHITECT

Swift Lee Office
1231 N Spring St. Suite B-203
Los Angeles, CA 90012
T. 323.257.8200
www.swiftleeoffice.com

CONSULTANT

STAMPS/SEALS

LICENSED ARCHITECT NATHAN A SWIFT C-28798 03-31-25 RENEWAL DATE STATE OF CALIFORNIA

50% CD	12.20.23
50% CD (PLATFORM LIFT)	02.23.24
100% CD	06.03.24

SHEET TITLE:
KINDERGARTEN BLDG. CLASSROOM & RESTROOM PLANS AND ELEVATIONS - PROPOSED

PROJECT NO.: | PROJECT ARCH.
DRAWN: | CHECKED:

SHEET NUMBER
A2.11

DATE | SHEET OF

CNS ENVIRONMENTAL, INC.

ATTACHMENT A
PROJECT MANUAL

FOR

ASBESTOS REMOVAL

AT

BASSETT STREET ELEMENTARY SCHOOL (2323)
ADA IMPROVMENTS
PROJECT/COLIN#: 10373370; PROJECT WO#: 38050577
VARIOUS BUILDINGS & EXTERIOR GROUNDS (2323-G)

LOCATED AT

15756 BASSETT STREET
LAKE BALBOA, CALIFORNIA 91406

IN THE LOS ANGELES UNIFIED SCHOOL DISTRICT

PREPARED BY:

CNS ENVIRONMENTAL, INC.
650 NORTH ROSE DRIVE, SUITE 616
PLACENTIA, CA 92870
CNS PROJECT #: 24-296

PREPARED FOR:

LOS ANGELES UNIFIED SCHOOL DISTRICT
FACILITIES ENVIRONMENTAL TECHNICAL UNIT
1240 SOUTH NAOMI AVENUE
LOS ANGELES, CA 90021

JULY 22, 2024

EDWARD D. SPINNEY, CAC #00-2795

I. MULTIPURPOSE BUILDING (002DAN)

A. Northwest Auditorium Storage Room (Chair Room Storage)

1) Remove and dispose of as friable hazardous asbestos waste the following materials.

   i. **Non-ACM** 12”x12” dark green floor tile and **Non-ACM** 12”x12” light green floor tile with associated **ACM** black mastic on concrete substrate, approximately **30 square feet**.

   ii. All flooring shall be manually removed.

   iii. ACM mastic will be removed from the concrete slab subfloor by using SCAQMD permitted mechanical grinders with HEPA filtration attachments under SCAQMD Procedure 1 containment. All ACM debris must be picked up and disposed of as friable hazardous waste.

   iv. Floor tile and mastic shall be removed by a District Pre-qualified Asbestos Abatement Contractor in accordance with LAUSD Specification “Section 02 8213 – Asbestos Abatement and Asbestos Related Disturbance” as prepared by the Los Angeles Unified School District.

   v. TEM post abatement air sampling will be required. The post abatement air sampling clearance results shall be below 70 S/mm^2.

B. Auditorium (East and Southwest Door Entrances)

1) Remove and dispose of as non-friable and non-hazardous asbestos waste the following materials.

   i. Top layer: **Non-ACM** 12”x12” dark blue and **Non-ACM** 12”x12” light blue – mixed – floor tiles with associated **Non-ACM** adhesive over Bottom layer: **Non-ACM** gray leveling compound with **Non-ACM** white encapsulation material and **ACM** black mastic on concrete substrate, approximately **less than 3 square feet**.

   ii. Minor disturbance of ACM (i.e. drilling, coring, sawing, or spot removal) less than or equal to 3 square feet or linear feet per location and less than 100 square feet total for the entire project can be performed by AHERA-certified, 16-hour operations and maintenance trained personnel in accordance with LAUSD Standard Specifications Section 02 8216 for the Removal of Non-Friable Asbestos Containing Floor Tile.

   iii. After concrete floor has been razor scraped, FETU representative shall give a visual clearance. When visual clearance is achieved floor will be scrubbed with a non-metallic scrub pad and amended water. Upon giving visual clearance after the scrubbing, floor shall be lightly encapsulated.

C. The regulated work areas involved are shown in the attached drawings.

II. BUILDING A (003DAN)

A. Rooms 35 and 36 (Door Entrances)

1) Remove and dispose of as non-friable and non-hazardous asbestos waste the following materials.

   i. Top layer: **Non-ACM** 12”x12” dark blue and **Non-ACM** 12”x12” light blue – mixed – floor tiles with associated **Non-ACM** adhesive over Bottom layer: **Non-ACM** gray leveling compound with **Non-ACM** white encapsulation material and **ACM** black mastic on concrete substrate, approximately **less than 3 square feet**.

   ii. Minor disturbance of ACM (i.e. drilling, coring, sawing, or spot removal) less than or equal to 3 square feet or linear feet per location and less than 100 square feet total for the entire project can be performed by AHERA-certified, 16-hour operations and maintenance trained personnel in accordance with LAUSD Standard Specifications Section 02 8216 for the Removal of Non-Friable Asbestos Containing Floor Tile.

   iii. After concrete floor has been razor scraped, FETU representative shall give a visual clearance. When visual clearance is achieved floor will be scrubbed with a non-metallic scrub pad and amended water. Upon giving visual clearance after the scrubbing, floor shall be lightly encapsulated.

B. The regulated work areas involved are shown in the attached drawings.

III. UTILITY & CLASSROOMS BUILDING (004DAN)

A. Rooms 37 and 38

1) Remove and dispose of as friable hazardous asbestos waste the following materials.

   i. **Non-ACM** 12”x12” light brown floor tile with associated **ACM** black mastic on concrete substrate in Rooms 37 & 38, approximately **20 square feet**.

   ii. **Non-ACM** 12”x12” brown floor tile with associated **Non-ACM** adhesive and **ACM** black mastic (patch) on concrete substrate in Room 38, approximately **15 square feet**

   iii. All flooring shall be manually removed.

   iv. ACM mastic will be removed from the concrete slab subfloor by using SCAQMD permitted mechanical grinders with HEPA filtration attachments under SCAQMD Procedure 1 containment. All ACM debris must be picked up and disposed of as friable hazardous waste.

   v. Floor tile and mastic shall be removed by a District Pre-qualified Asbestos Abatement Contractor in accordance with LAUSD Specification “Section 02 8213 – Asbestos Abatement and Asbestos Related Disturbance” as prepared by the Los Angeles Unified School District.

   vi. TEM post abatement air sampling will be required. The post abatement air sampling clearance results shall be below 70 S/mm^2.

B. The regulated work areas involved are shown in the attached drawings.

IV. BUILDING C (005DAN)

A. Room 27

1) Remove and dispose of as friable hazardous asbestos waste the following materials.

   i. **Non-ACM** 12”x12” gold floor tile with associated **ACM** black mastic on concrete substrate, approximately **38 square feet**.

   ii. All flooring shall be manually removed.

   iii. ACM mastic will be removed from the concrete slab subfloor by using SCAQMD permitted mechanical grinders with HEPA filtration attachments under SCAQMD Procedure 1 containment. All ACM debris must be picked up and disposed of as friable hazardous waste.

   iv. Floor tile and mastic shall be removed by a District Pre-qualified Asbestos Abatement Contractor in accordance with LAUSD Specification “Section 02 8213 – Asbestos Abatement and Asbestos Related Disturbance” as prepared by the Los Angeles Unified School District.

   v. TEM post abatement air sampling will be required. The post abatement air sampling clearance results shall be below 70 S/mm^2.

B. Room 30 (Door Threshold)

1) Remove and dispose of as non-friable and non-hazardous asbestos waste the following materials.

   i. **Non-ACM** 12”x12” light brown floor tile with associated **ACM** black mastic on concrete substrate, approximately **less than 3 square feet**.

   ii. Minor disturbance of ACM (i.e. drilling, coring, sawing, or spot removal) less than or equal to 3 square feet or linear feet per location and less than 100 square feet total for the entire project can be performed by AHERA-certified, 16-hour operations and maintenance trained personnel in accordance with LAUSD Standard Specifications Section 02 8216 for the Removal of Non-Friable Asbestos Containing Floor Tile.

   iii. After concrete floor has been razor scraped, FETU representative shall give a visual clearance. When visual clearance is achieved floor will be scrubbed with a non-metallic scrub pad and amended water. Upon giving visual clearance after the scrubbing, floor shall be lightly encapsulated.

C. Faculty Restroom

1) Remove and dispose of as non-friable and non-hazardous asbestos waste the following materials.

   i. **Assumed ACM** mirror mastic associated with wall mounted mirror, approximately **less than 3 square feet.**

   ii. Minor disturbance of ACM (i.e. drilling, coring, sawing, or spot removal) less than or equal to 3 square feet or linear feet per location and less than 100 square feet total for the entire project can be performed by AHERA-certified, 16-hour operations and maintenance trained personnel in accordance with LAUSD Standard Specifications Section 02 8216 for the Removal of Non-Friable Asbestos Containing Floor Tile.

D. The regulated work areas involved are shown in the attached drawings.

E. **ACM** pipe insulation elbows in girl's & boy's restroom ceiling spaces and **ACM** pipe insulation mud present in water heater closet are not to be impacted, according to the current scope of work.

F. Inaccessible wall cavities of restrooms shall be checked prior to wall openings and restroom upgrades.

V. BUILDING D (006DAN)

A. Room 39 (Door Threshold)

1) Remove and dispose of as non-friable and non-hazardous asbestos waste the following materials.

   i. Top layer: **Non-ACM** 12"x12" blue and **Non-ACM** 12"x12" light blue – mixed – floor tiles with associated **Non-ACM** adhesive over Bottom layer: **Non-ACM** gray leveling material with **Non-ACM** white encapsulation material and **ACM** mastic black mastic on concrete substrate, approximately **less than 3 square feet**.

   ii. Minor disturbance of ACM (i.e. drilling, coring, sawing, or spot removal) less than or equal to 3 square feet or linear feet per location and less than 100 square feet total for the entire project can be performed by AHERA-certified, 16-hour operations and maintenance trained personnel in accordance with LAUSD Standard Specifications Section 02 8216 for the Removal of Non-Friable Asbestos Containing Floor Tile.

   iii. After concrete floor has been razor scraped, FETU representative shall give a visual clearance. When visual clearance is achieved floor will be scrubbed with a non-metallic scrub pad and amended water. Upon giving visual clearance after the scrubbing, floor shall be lightly encapsulated.

B. The regulated work areas involved are shown in the attached drawings.

C. **Assumed ACM** pipe insulation elbows in ceiling spaces above restrooms and plant managers office are not to be impacted, according to the current scope of work.

D. Inaccessible wall cavities of restrooms shall be checked prior to wall openings and restroom upgrades

VI. KINDERGARTEN BUILDING (007DAN)

A. Rooms 22 and 23 (Door Thresholds)

1) Remove and dispose of as non-friable and non-hazardous asbestos waste the following materials.

   i. **Non-ACM** 12"x12" light blue floor tile with associated **ACM** black mastic on concrete substrate, approximately **less than 3 square feet**.

   ii. Minor disturbance of ACM (i.e. drilling, coring, sawing, or spot removal) less than or equal to 3 square feet or linear feet per location and less than 100 square feet total for the entire project can be performed by AHERA-certified, 16-hour operations and maintenance trained

personnel in accordance with LAUSD Standard Specifications Section 02 8216 for the Removal of Non-Friable Asbestos Containing Floor Tile.

iii. After concrete floor has been razor scraped, FETU representative shall give a visual clearance. When visual clearance is achieved floor will be scrubbed with a non-metallic scrub pad and amended water. Upon giving visual clearance after the scrubbing, floor shall be lightly encapsulated.

B. The regulated work areas involved are shown in the attached drawings

VII. EXTERIOR GROUNDS (2323-G)

A. Area "F" and Patch #4 in Area "F"

1) Remove and dispose of as non-friable and non-hazardous asbestos waste the following materials.

   i. Large sections or large segments of asbestos-containing construction material **(ACCM, 0.18% by point count)** asphalt paving and associated patch within the **ACCM** asphalt paving area, approximately **485 square feet.** Remove all asphalt layers down to aggregate base or native soil if no aggregate is present.

2) Remove and dispose of as friable and hazardous asbestos waste the following materials.

   i. Asbestos-containing construction material (ACCM) asphalt paving "debris", approximately **162 square feet**. After the removal of all larger sections or segments of asphalt, the remaining associated debris, loose soil, and debris generated from cutting with equipment shall be cleaned up using hand tools, wet methods, and/or HEPA vacuum and shall be disposed as friable hazardous asbestos waste.

B. The Abatement Contractor shall remove the asphalt paving section utilizing heavy equipment (bobcat, backhoe, etc.), manual tools, and wet methods.

C. When mechanical equipment is utilized, (e.g., saw cutting and/or grinding) to prep asphalt paving (ACCM) continuous use of HEPA vacuuming, and wet methods shall be utilized. The waste shall be disposed of friable hazardous asbestos waste.

D. All Abatement work shall be performed by an LAUSD Approved Contractor according to the current District Specification Section 02 8223 "Removal of Asbestos Containing Asphalt" under the supervision of the FETU or by a District approved Environmental Consultant.

E. Visual Clearance by District Representative and/or a Certified Asbestos Consultant shall be performed upon completion of the work.

F. The work areas involved are shown in the attached drawings.

VIII. PEELING AND LOOSE PAINT

A. Renovation, repair or painting work performed on all buildings regardless of the date of construction shall require special handling and environmental monitoring when coated surfaces including, but not limited to, painted, varnished, and glazed surfaces are impacted. All coated surfaces are assumed to be lead-based. All work shall be performed in compliance with Specification, Section 02 8333, "Lead Abatement and Lead Related Construction Work." XRF testing methodology is not acceptable in determining negative for lead content for Cal/OSHA compliance purposes, except for notification requirements. XRF may be used in determining lead-based paint for compliance with the U.S.E.P.A. Renovator, Repair, and Painting Rule. Disturbance of coated surfaces by contractors will be monitored by qualified District staff or Environmental Consultant sufficient to ensure that proper training and work procedures, cleanup, and waste handling are employed.

B. Loose or flaky paint that will be disturbed during the work of this project or in close proximity of the work area shall be stabilized by removing the loose or flaky paint and surfaces encapsulated, leaving only paint in stable condition.

C. It should be noted that any coated surfaces and building materials not listed above are to be considered to be lead-based and asbestos-containing respectively. Should the project require the disturbance of these surfaces and building materials, the FETU shall be notified.

D. Paint waste shall not be commingled with asbestos waste.

E. All work involving lead-based and/or lead-containing materials shall be performed in accordance with the attached specifications "Section 02 8333 – Lead Abatement and Lead Related Construction Work" as prepared by the Los Angeles Unified School District.

I. GENERAL

A. The following special conditions shall take precedence over the standard specifications. The drawings included with these specifications show the plot and floor plans of the work areas.

1. Abatement contractor shall be responsible for verifying all dimensions prior to bid. Any amounts listed on these specifications are only estimated and are not to be considered final measurements.

2. Abatement contractor shall provide a secured and separate storage for all materials, equipment, and waste.

3. Abatement contractor shall physically secure all entrances and opening to work areas until final clearance is received, as approved by the District representative.

4. In addition to the project specification submittal requirements, the Abatement contractor shall submit for review and approval an asbestos abatement work plan. The asbestos work plan shall detail the means and methods that will be used for controlling and containing fiber release during the removal/disturbance of asbestos containing material in accordance with the project specifications. The plan shall include, but not be limited to, a drawing that adequately depicts the location of asbestos control areas, change areas, emergency exit routes and exits, and any special features (e.g. critical barriers, pony walls, air filtration units, makeup air, air filtration unit exhaust, decontamination units, load out/bag out units, etc.).

5. The Abatement Contractor and/or lead trained General or Sub Contractors shall also submit a Lead Related Disturbance Work Plan. The Lead Work Plan detail the means and methods that will be used for controlling and containing lead dust release during removal/disturbance of lead containing building components in accordance with project specifications. The plan shall include, but not limited to, a drawing that adequately depicts the locations of lead control areas, emergency exit routes, make up air, air filtration unit exhaust, decontamination units and load out/bag out units etc.

6. The abatement contractor shall not proceed with the disturbance of ACM and Lead until the asbestos and Lead work plan and written work schedule have been approved by a District representative in writing.

7. Any damage to duct work caused by the contractor shall be repaired and restored to operational condition before start of insulation.

8. Contractor shall take precautions not to damage the ceiling during abatement. Any damage to ceiling shall be repaired or replaced by the contractor.

9. The abatement work schedule and time period for completion of the abatement work shall be determined by the District Project Manager or Owner Authorized Representative (OAR).

10. All Scheduled asbestos abatement and asbestos and lead related disturbance work approved by the OAR shall be coordinated directly with the environmental consultant and Facilities Environmental Technical Unit (FETU). This will ensure that the abatement and disturbance work will have appropriate oversight.

11. Noise from the work process shall not interfere with the normal and scheduled day or evening school activities. Work schedule will be determined with the involvement of the school staff at the job start meeting.

12. At the commencement of the project, all Contract Documents, Project Manual and Specifications shall be on site and remain until the completion of the project.

II. SITE SPECIFIC CONDITIONS

A. Work Areas

1. Prior to start of the asbestos removal work, all electrical equipment, including but not limited to, junction boxes, cable connections, etc., shall be pre-cleaned and wrapped with one (1) layer of six (6)-mil polyethylene sheeting and seal with duct tape. This layer shall be removed after air clearance has been achieved.

2. If applicable, all suspended and/or porous ceiling systems included in the scope of work shall be covered with poly-sheeting as part of containment set-up.

3. All electrical and mechanical equipment, including but not limited to, gauges, valves, etc., throughout the work areas involved shall not be encapsulated or a lockdown applied. These items shall be decontaminated, left in place, and protected during the duration of the contract.

4. The abatement contractor shall demarcate the work area to warn unauthorized persons from entering the workspace. The Abatement Contractor shall post the proper warning signs and labels in both English and Spanish at entrance to the work area.

5. All surfaces throughout the work area(s) shall be thoroughly pre-cleaned.

6. Fencing with 8’ fence green screen (privacy screen) shall be setup around each regulated work area. Height of the privacy screens shall be as required to adequately conceal the entire containment.

7. Maintain Regulated Area security during Abatement Work. Regulated Areas and ancillary equipment accessible to non-authorized personnel shall be protected from unauthorized access by constructing a minimum barrier of 3/8 inch CDX plywood supported by 2 by 4 studs, 16 inches on center. Height shall be as required to safely access Regulated Area. An access door shall be provided with hasp and padlock sufficient to prevent unauthorized entry. A key shall be provided to the Owner and Owner Consultant. Required barriers within an occupied building shall be furnished with sheathing as required by state and local fire protection regulations.

8. Decontamination Units, Bag-Out Chambers, and Air Filtration Units:

   a) The Abatement Contractor shall construct a three-stage decontamination unit for hazardous abatement work and a two-stage decontamination unit for non-hazardous abatement work. Construction of the decontamination unit shall not interfere with the closing of any doors. The doors shall be locked at the end of each day.

b) Set-up work shall not start until the decontamination units, bag-out chambers (where applicable), and air filtration units are installed and fully operational and approved by the District representative.

c) In addition to the requirements of the standard specifications, decontamination of the work area shall not commence until the work area is fully isolated and the stipulated negative pressure differential established. For hazardous work, manometer input terminal (tube) must be located away from the intake of any air filtration unit.

d) Where applicable, the abatement contractor shall install secured hard lid covers on windows used for air filtration exhaust ducting. The abatement contractor shall maintain the integrity of the hard lid covers and air filtration flex ducts at all times.

e) Negative pressure unit flex ducting must be exhausted at roof level.

9. Contractor shall provide separate containers for waste and tools/materials. Placement of the waste and tools/materials storage containers must be approved by the site administrator.

10. Load out and transportation of waste or materials shall not be performed when students are present.

11. Background air monitoring, air monitoring during the abatement process, and post-abatement air clearances will be required for this project.

12. Areas failing to pass air clearance monitoring shall be re-cleaned and retested until satisfactory levels are obtained in compliance with this specification. Contractor shall be responsible for all costs incurred (e.g., monitoring, analyses, etc.) resulting from failure to receive initial air clearance.

13. Products (i.e. encapsulant) used during this project shall be reviewed by the consultant as part of the pre-job submittals and verified that they are approved by OEHS.

B. ACM Flooring and Mastics on Concrete Subfloor

1. Where floor tile and mastic extend under existing walls, the lower section of the wall will need to be removed to provide access for abatement of flooring and mastics.

2. In addition to the above requirements, the removal of the flooring shall be performed under a Class I regulated work area in compliance with District Specifications 02 8213, “Asbestos Abatement and Asbestos Related Disturbance” as follows:

   a. The barriers used for the construction of the isolated work area shall be equipped with transparent viewing ports which allow outside observation of all stripping and removal of ACM.

   b. The security of the work area shall be maintained at all times by constructing a hard barrier with a plywood ceiling. For more details, see District Specification 02 8213.

   c. Floor mastic shall be removed with a SCAQMD permitted bead blasting machine and/or HEPA attached grinders. All surfaces throughout the work areas that are un-reachable shall be removed using SCAQMD permitted and approved mechanical grinder equipped with HEPA Filtration attachments.

d. A visual inspection, prior to the application of the lockdown with Foster Lockdown 32-60 Blue Encapsulant, must be conducted to ensure no residual (staining and/or three dimensional) mastic remains on the substrate and that there are no remaining blasting media in the work area.

3. Flooring materials and related waste, including mastic, polyethylene sheeting, respirator filters, absorbent rags and cleaning pads, etc., must be disposed of as friable asbestos waste.

C. Clearance Air Monitoring

1. The District shall arrange for sampling of the air in the work area(s) for airborne fiber concentrations.

2. Final Clearance Air Sampling shall be done in accordance with 40 CFR, Part 763, Subpart E, Appendix A. The clearance criteria shall be based on TEM analysis using AHERA protocols. If air sample results are within limits of AHERA requirements (70 structures/mm^2) the Contractor shall remove the containment barriers.
3. Areas exceeding this level shall require additional cleaning and retesting until satisfactory levels are obtained in accordance with this section. Contractor shall be responsible for the cost of all subsequent clearance air monitoring and analysis resulting from the failure to receive initial clearance.

III. ASPHALT AREA WORK PREPERATION AND WORK PROCEDURES

A. Regulated Work Area

1. Determine the location of the work area and remove any movable items.

2. Establish a regulated area for each work area location.

3. Demarcate the regulated area, provide and post signs. The signs shall comply with Cal/OSHA regulations.

4. The regulated area shall be demarcated using delineators and warning tape. Temporary 8 feet chain link fencing with green privacy screening fencing shall be used to isolate the regulated area.

5. A two-stage decontamination unit shall be installed for each work area that requires non-friable non-hazardous asphalt paving removal utilizing heavy equipment. The decontamination unit shall be secured with a temporary eight-foot chain link fencing with green privacy screen and secured at the end of each shift.

6. Visual clearance by OWNER'S Facilities Environmental Technical Unit (FETU) and/or Environmental Consultant shall be performed after completion of removal and prior to teardown of containment.

B. Stock Pile

1. Stockpiles are prohibited on this project; all asphalt debris shall be immediately loaded to the designated waste bin.

C. Path of Travel

1. Create a path of travel from the regulated area to the designated waste bin. The path of travel shall be demarcated using delineators and warning tape.

D. Equipment

1. Establish a 2-stage decontamination chambers (change room and equipment room) for the decontamination of personnel and equipment using 10-mil (minimum thickness) polyethylene sheeting.

2. The 2-stage decontamination chambers (decontamination units) shall be the only designated entrance and exit for personnel and equipment to the regulated area.

3. HEPA filter equipped tools must be approved and registered by SCAQMD.

4. The contractor shall use heavy equipment to remove the asphalt and load into containers. No grinding or pulverizing of asphalt is allowed. Heavy equipment can be used to lift and break sections of asphalt into manageable sized pieces for loading. Special care will be taken if tracked equipment is rolling across asphalt, to avoid creating dust.

5. When mechanical equipment is necessary, continuous use of HEPA vacuuming and wet methods shall be utilized. The waste shall be disposed as friable hazardous asbestos waste.

E. Personnel

1. Personnel entering the work area shall wear disposable coveralls and half face respirator with P100 filters at a minimum.

F. Removal Procedure

1. Disturbance to ACCM asphalt paving shall not begin until upwind and downwind area air monitoring has been initiated.

2. Determine the locations of the work areas and remove any movable items.

3. Move personnel and equipment into the regulated area. The equipment shall include hand tools, HEPA vacuum and heavy equipment.

4. When breaking the asphalt into smaller sections in order to remove, wet methods (with amended water) shall be used.

5. The asphalt shall be maintained in a wet condition with a copious amount of amended water throughout the removal process.

6. Once the asphalt has been broken up it shall be burrito wrapped and removed from the regulated area using skip loaders or similar equipment and moved to the designated waste bin. This shall be performed before the end of each shift.

7. The skip loader (or similar) shall be cleaned in such a way that gross contamination is removed.

8. When windy conditions exist or are expected at wind speeds of 15 miles per hour (mph) pr greater and wind gusts greater than 25 mph, the removal process shall stop until the conditions improve. The Abatement Contractor should contact the FETU or the District Representative for further direction.

9. When all asphalt has been removed from the regulated area all visible asphalt debris shall be cleaned up from the regulated area and path of travel and disposed of as hazardous waste.

10. Path of travel – After visual inspection has been passed by the District consultant, the delineators and warning tape designating the path of travel may be removed.

11. The Abatement Contractor is responsible for properly decontaminating all equipment, such as hand tools, vacuums, and vehicles. Visual inspection must be then conducted by the District Representative for confirmation.

12. Once all asphalt waste and equipment have been removed from the regulated area the District consultant shall conduct a visual clearance inspection.
13. Upon receiving visual clearance, teardown the regulated area and proceed to the next work area.

14. Replacement of the asphalt in the abated areas must be closely coordinated with the paving contractor to avoid leaving openings and holes in the ground and to prevent trip and fall hazards.

IV. ASPHALT SITE SPECIFIC CONDITIONS

A. The phasing/sequences involving the preparation (including pre-cleaning) of the work area, clean up, abatement, and visual inspection shall be determined prior to job start and shall be directed by the District.

B. All surfaces throughout the work areas shall be thoroughly pre-cleaned.

C. If the work area fails visual inspection, additional cleaning by the Abatement Contractor at the contractor's expense will be required until satisfactory conditions are achieved.

D. The Abatement Contractor shall demarcate the work area to warn unauthorized persons from entering the workspace

E. All waste with lead-base paint, stains, varnishes, or other coatings, present must be characterized for lead content prior to disposal.

F. After ACCM asphalt paving is removed, it shall be loaded into a dumpster or waste truck lined with two (2) layers of 6-mil polyethylene sheeting and burrito wrapped.

G. Abatement Contractor is responsible for acquiring information from the waste hauler/waste facility for proper disposal of asbestos-containing asphalt.

H. Asbestos-containing asphalt paving "debris" (hazardous asbestos waste) shall not be comingled with ACCM asphalt paving (non-hazardous asbestos waste).

V. AIR MONITORING

A. Perimeter air sampling (Area) during the removal process must be conducted by District Representative.

1. When all work areas have passed a visual inspection in accordance with District Specification Section 02 8223 "Removal of Asbestos Containing Asphalt" and the Abatement Design Phase II Project Manual, each work area will be released.

VI. CLOSE-OUT DOCUMENTS

A. The Abatement Contractor shall provide the District all of the following Documents:

- Filter change logs for all air filtration units (where applicable), water filtration units, and respirators
- Foreman's daily job reports
- Employee entry/exit logs for all containments
- Visitor entry/exit logs for all containments
- Manometer printout reports for all applicable containments (where applicable)
- Air sampling results for personal monitoring of workers
- Air samples for abatement work areas, and air filtration units (where applicable)
- Copies of all Hazardous and Non-Hazardous Waste Manifests
- All Hazardous Waste weight tickets
- All signed Daily Personnel Report Forms
- Signed code of conduct from each employee working on a project
- Signed asbestos Abatement Project Personnel Logs

B. Abatement Contractor shall have thirty (30) working days after the completion of the abatement of the last work area to submit the close-out documents that are required to prevent continuation of the contract time.

C. Failure to provide the documents as required will result in a corrective item value in an amount sufficient to cover the cost that would be incurred if a regulatory agency citation was issued for the absence of such documents or, in the absence of such a regulation, in an amount the District deems fair and reasonable for the efforts of pursuing the document(s) from the Contractor and obtaining the documentation from other sources.

This report may not be changed, modified or include additions without the express written permission from the FETU.

END OF SECTION

Los Angeles Unified School District
Facilities Services Division

OFFICE OF THE SUPERINTENDENT **FACILITIES SERVICES DIVISION**

July 26th, 2024

CNS Environmental, Inc.
ATTN: Edward D. Spinney
650 North Rose Drive, Suite 616
Placentia, CA 9192870201

RE: PHASE __II____ REVIEW AND APPROVAL FOR ASBESTOS __X__ and/or LEAD __X_____

The Facilities Environmental Technical Unit (FETU) has reviewed and approved your Phase ____II_____ document(s) for the project listed below.

School: __Bassett Street Elementary School_____ School Code # _____2323_____

Project: _ADA Improvements and Asphalt Project_____ Colin No. _____10373370_____

Date of Report: _July 22nd, 2024_____ Maximo Work Order No. ___38050577_____

If you have any questions regarding this approval, please call the FETU at (213) 745-1450.

Sincerely,

Jennie Tran

Jennie Tran
Sr. Asbestos Abatement Worker
Facilities Environmental Technical Unit

Greta Galoustian, Facilities Environmental Technical Manager
Kwun Yang, FETU Analyst

BASSETT STREET ELEMENTARY SCHOOL (2323)
ADA IMPROVEMENTS
CNS ENVIRONMENTAL, INC

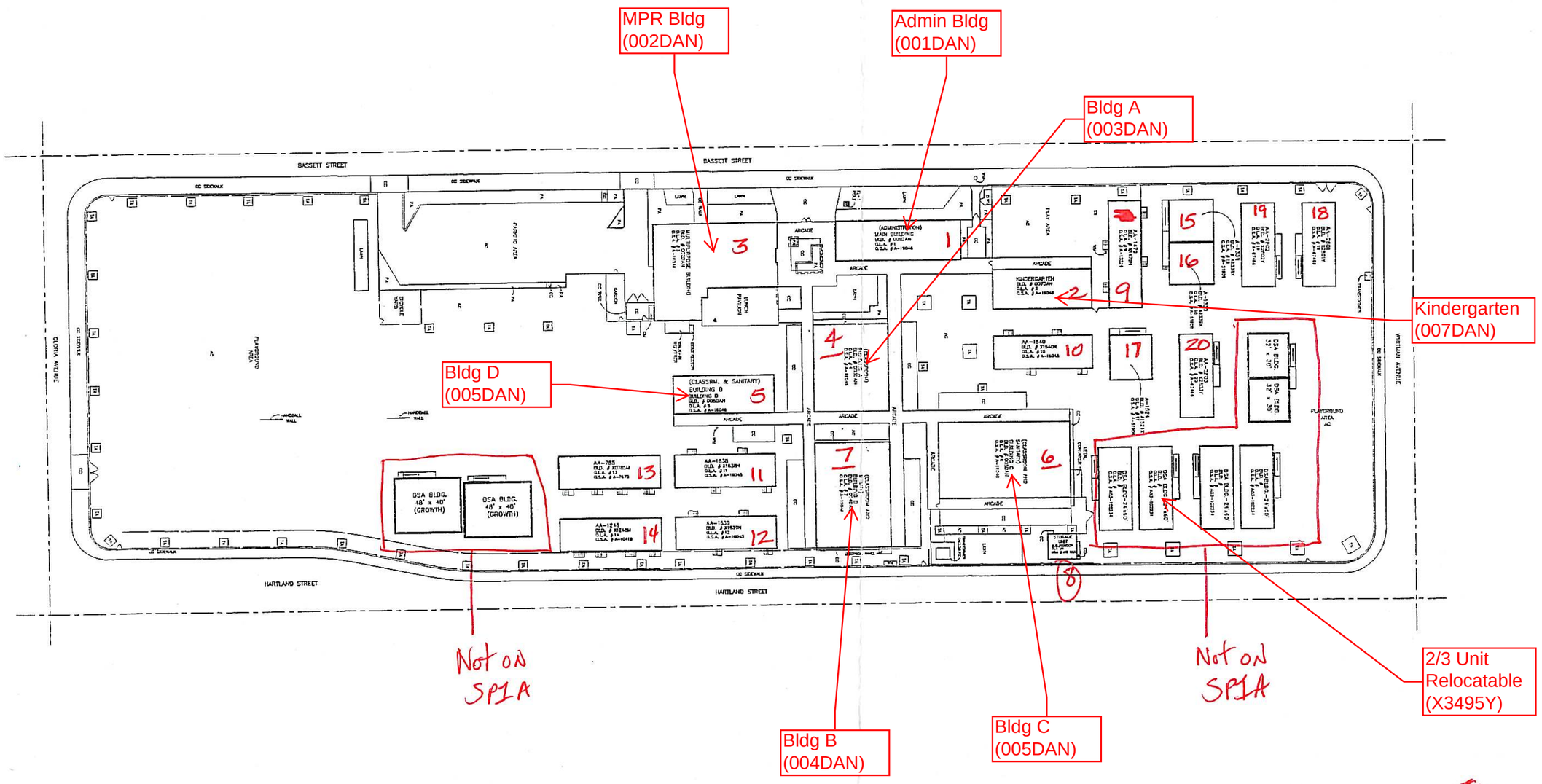

RELOCATABLE HOUSING UNIT
FACILITIES SERVICES DIVISION
333 S. GRAND AVENUE, 4th FLR
LOS ANGELES, CA 90071

LOS ANGELES UNIFIED SCHOOL DISTRICT · BOARD OF EDUCATION

PLOT PLAN

PROJECT

SCHOOL
BASSETT STREET SCHOOL
15756 BASSETT STREET
VAN NUYS, CA 91406

VERIFICATION		
NO.	DATE	BY
1	07-14-00	SJ

REVISIONS		
NO.	DATE	BY
1	08-28-00	JZI

LOCATION CODE 2323

DRAWN BY LM

DRAWING NO.

CHECKED BY

INDEX NO. 1 / 1

LOS ANGELES SCHOOL DISTRICT
DIAGRAM OF BUILDING AREAS

LOCATION 2323
APPLICATION NO. 22/
DRAWING BAT03

BASSETT STREET ELEMENTARY SCHOOL (2323)
ADA IMPROVEMENTS
CNS ENVIRONMENTAL, INC

Multi-Purpose Building (002DAN)

DISTRICT: LOS ANGELES UNIFIED SCHOOL DISTRICT

PLOT PLANS AND ALLOTMENTS UNIT
IBM TOWER - ROOM 420

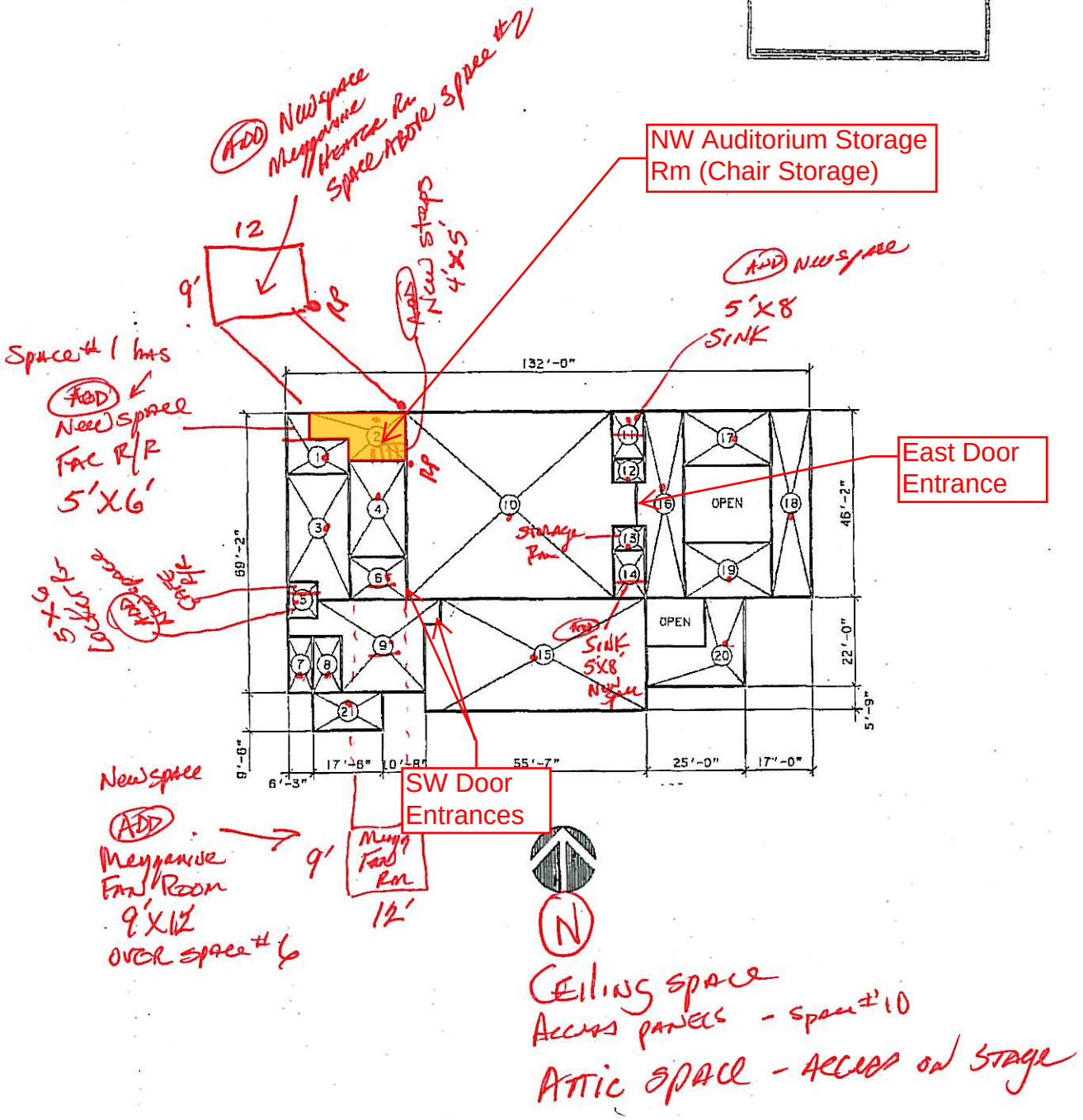

PLOT SCALE: 1"=30'-0"

AUTHORIZED AGENT
LOS ANGELES UNIFIED SCHOOL DISTRICT

DATE: 01/05/95
SHEET 7 OF 41 SHEETS

LOS ANGELES SCHOOL DISTRICT

LOCATION 2323

DIAGRAM OF BUILDING AREAS

APPLICATION NO. 22/

SCHOOL: BASSETT STREET SCHOOL

ADDRESS: 15756 BASSETT STREET
VAN NUYS, CA 91406

DISTRICT: LOS ANGELES UNIFIED SCHOOL DISTRICT

PLOT PLANS AND ALLOTMENTS UNIT
IBM TOWER - ROOM 420

BUILDING 3

SPACE	DESCRIPTION	DIMENSIONS	AREA
1	~~WOMEN'S RESTROOM~~ Lounge Area	15'10", 8'8", 9'11", 6'5", 5'11", 15'1"	175
2	~~CHAIR~~ STORAGE	9'11", 5'6", 14'2", 11'11", 24'1", 6'5"	232
3	FACULTY DINING	7'6", 4'5", 8'4", 31'1", 15'10", 26'8"	459
4	PLATFORM Stage	14'2", 23'10", 14'2", 23'10"	338
5	TOILET CAFE	3X 7'6", ~~8'10"~~, 7'6", 8'10"	66
6	PASSAGE	14'2", 10'5", 14'2", 10'5"	148
7	UTILITY SPACE WATER HEATER	6'3", 13'11", 6'3", 13'11"	87
8	STORAGE / CAFE INVG. OFFICE	7'1", 13'11", 7'1", 13'11"	99
9	KITCHEN AREA	13'4", 13'11", 21'1", 16'9", 4'0", 6'3", 30'11", 4'5", 7'6", 4'8"	598
10	ASSEMBLY ROOM	52'0", 17'8", 6'0", 10'10", 6'0", 17'8", 52'0", 46'2"	2466
11	GIRL'S TOILET	6X 8'0", ~~11'9"~~, 8'0", 11'9"	94
12	JANITOR Hopper	8'0", 5'11", 8'0", 5'11"	47
13	AUDIO VISUAL / STORAGE Rm	8'0", 5'11", 8'0", 5'11"	47
14	BOY'S TOILET	8'0", 11'9", 8'0", 11'9"	94
15	PAVILION LUNCH	55'7", 27'9", 51'7", 6'3", 4'0", 21'6"	506 (1/3)
16	ARCADES	2'0", 17'8", 10'0", 46'2", 10'0", 17'8", 2'0", 10'10"	161 (1/3)
17	ARCADES	22'0", 13'6", 22'0", 13'6"	99 (1/3)
18	ARCADES	10'0", 46'2", 10'0", 46'2"	154 (1/3)
19	ARCADES	22'0", 13'6", 22'0", 13'6"	99 (1/3)
20	ARCADES	25'0", 22'0", 10'0", 12'0", 15'0", 10'0"	123 (1/3)
21	WALK-IN FREEZER	17'6", 9'6", 17'6", 9'6"	166
		SUB-TOTAL	6258
		+ MEZZ.	334
		BUILDING TOTAL	~~6288~~ 6592#

Note: space # 11 has New space
ADD SINK AREA 5'X8'

Space # 14 has New space
ADD SINK AREA 5'X8'

Space # 5 has New space
ADD Locker Rm 5'X8'

AUTHORIZED AGENT
LOS ANGELES UNIFIED SCHOOL DISTRICT

DATE: 01/05/95
SHEET 8 OF 41 SHEETS

LOS ANGELES SCHOOL DISTRICT
DIAGRAM OF BUILDING AREAS

LOCATION 2323
APPLICATION NO. 22/
DRAWING BATCH

BASSETT STREET ELEMENTARY SCHOOL (2323)
ADA IMPROVEMENTS
CNS ENVIRONMENTAL, INC

Building A (002DAN)

BUILDING 4

DISTRICT: LOS ANGELES UNIFIED SCHOOL DISTRICT

PLOT PLANS AND
ALLOTMENTS UNIT
IBM TOWER - ROOM 420

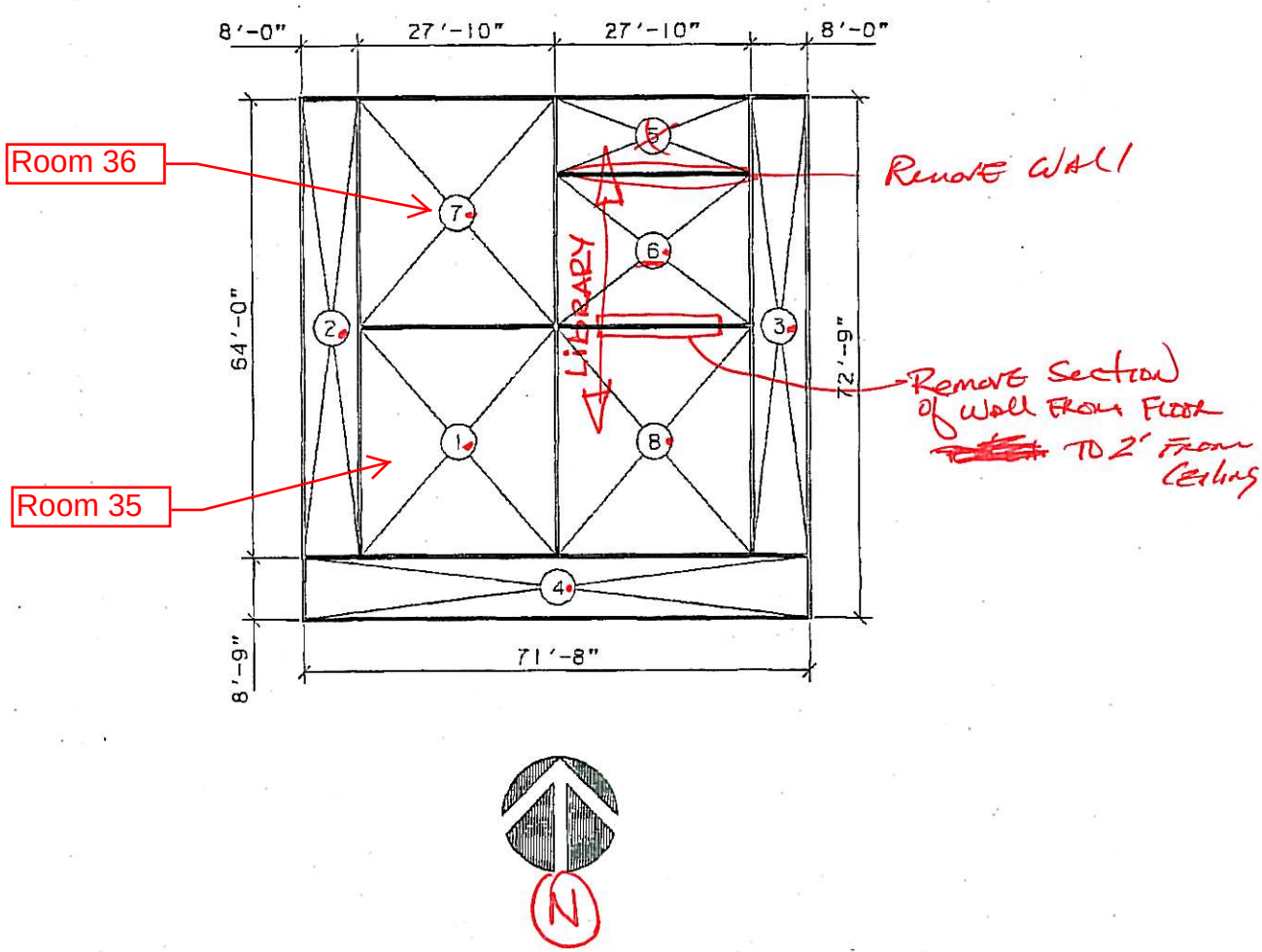

PLOT SCALE: 1"=20'-0"

AUTHORIZED AGENT
LOS ANGELES UNIFIED SCHOOL DISTRICT

DATE: 01/05/95
SHEET 9 OF 41 SHEETS

LOS ANGELES SCHOOL DISTRICT

LOCATION 2323

DIAGRAM OF BUILDING AREAS

APPLICATION NO. 22/

SCHOOL: BASSETT STREET SCHOOL

ADDRESS: 15756 BASSETT STREET
VAN NUYS, CA 91406

DISTRICT: LOS ANGELES UNIFIED SCHOOL DISTRICT

PLOT PLANS AND
ALLOTMENTS UNIT
IBM TOWER - ROOM 420

BUILDING 4

SPACE	DESCRIPTION	DIMENSIONS	AREA
1	GENERAL CLASSROOM 35	27'10", 32'0", 27'10", 32'0"	891
2	ARCADES	8'0", 64'0", 8'0", 64'0"	171 (1/3)
3	ARCADES	8'0", 64'0", 8'0", 64'0"	171 (1/3)
4	ARCADES	8'9", 71'8", 8'9", 71'8"	-209 (1/3)
5	~~LANGUAGE/SPEECH IMPAIRED~~ Removed	27'10", 10'8", 27'10", 10'8"	297
6	GENERAL CLASSROOM	27'10", 21'4", 27'10", 21'4"	594
7	GENERAL CLASSROOM 36	27'10", 32'0", 27'10", 32'0"	891
8	GENERAL CLASSROOM	27'10", 32'0", 27'10", 32'0"	891
		TOTAL	3697
		BUILDING TOTAL	3697

Part of Library

Combined into Library

AUTHORIZED AGENT
LOS ANGELES UNIFIED SCHOOL DISTRICT

DATE: 01/05/95
SHEET 10 OF 41 SHEETS

LOS ANGELES SCHOOL DISTRICT

DIAGRAM OF BUILDING AREAS

LOCATION 2323

APPLICATION NO. 337

DRAWING BAT

BUILDING 7

BASSETT STREET ELEMENTARY SCHOOL (2323)
ADA IMPROVEMENTS
CNS ENVIRONMENTAL, INC

Utility & Classroom Building (004DAN)

DISTRICT: LOS ANGELES UNIFIED SCHOOL DISTRICT

PLOT PLANS AND ALLOTMENTS UNIT
IBM TOWER - ROOM 420

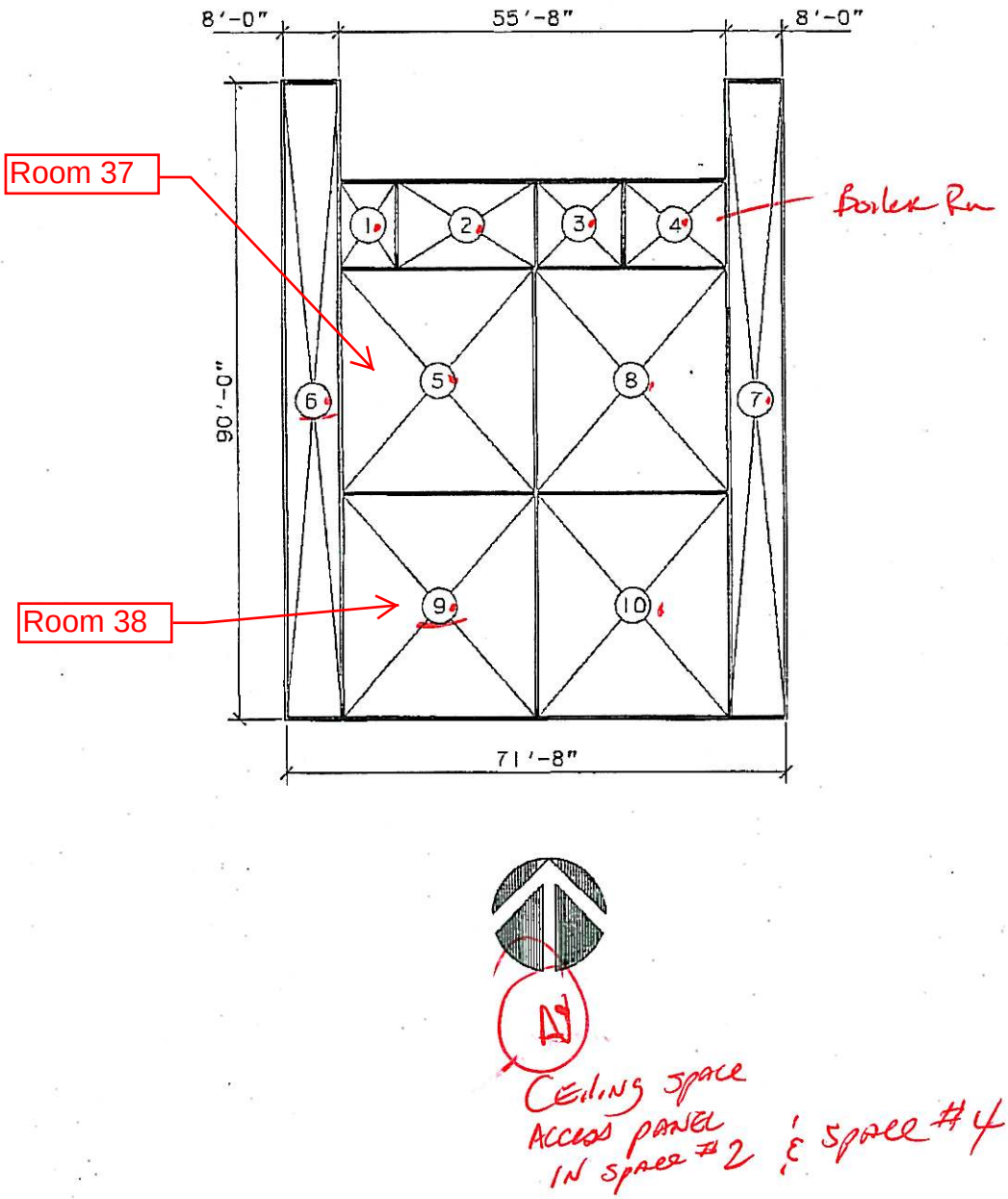

PLOT SCALE: 1"=20'-0"

AUTHORIZED AGENT
LOS ANGELES UNIFIED SCHOOL DISTRICT

DATE: 01/05/95
SHEET 15 OF 41 SHEETS

LOS ANGELES SCHOOL DISTRICT

LOCATION 2323

DIAGRAM OF BUILDING AREAS

APPLICATION NO. 22/

SCHOOL: BASSETT STREET SCHOOL

ADDRESS: 15756 BASSETT STREET
VAN NUYS, CA 91406

DISTRICT: LOS ANGELES UNIFIED SCHOOL DISTRICT

PLOT PLANS AND
ALLOTMENTS UNIT
IBM TOWER - ROOM 420

BUILDING 7

SPACE	DESCRIPTION	DIMENSIONS	AREA
1	KILN ROOM	8'2", 12'3", 8'2", 12'3"	100
2	BOOK ROOM	20'0", 12'3", 20'0", 12'3"	245
3	ELECTRIC ROOM	12'6", 12'3", 12'6", 12'3"	153
Boiler Rm — 4	ALL PURPOSE ROOM/AREA/SPACE	15'0", 12'3", 15'0", 12'3"	184
5	GENERAL CLASSROOM 37	27'10", 31'10", 27'10", 31'10"	886
6	ARCADES	8'0", 90'0", 8'0", 90'0"	240 (1/3)
7	ARCADES	8'0", 90'0", 8'0", 90'0"	240 (1/3)
8	GENERAL CLASSROOM 33	27'10", 31'10", 27'10", 31'10"	886
9	GENERAL CLASSROOM 38	27'10", 31'10", 27'10", 31'10"	886
10	GENERAL CLASSROOM 34	27'10", 31'10", 27'10", 31'10"	886
		TOTAL	4706
		BUILDING TOTAL	4706

AUTHORIZED AGENT
LOS ANGELES UNIFIED SCHOOL DISTRICT

DATE: 01/05/95
SHEET 16 OF 41 SHEETS

LOS ANGELES SCHOOL DISTRICT

DIAGRAM OF BUILDING AREAS

BASSETT STREET ELEMENTARY SCHOOL (2323)
ADA IMPROVEMENTS
CNS ENVIRONMENTAL, INC

LOCATION 2323

APPLICATION NO. 22/

DRAWING BATC Building C (005DAN)

BUILDING 6

DISTRICT: LOS ANGELES UNIFIED SCHOOL DISTRICT

PLOT PLANS AND
ALLOTMENTS UNIT
IBM TOWER - ROOM 420

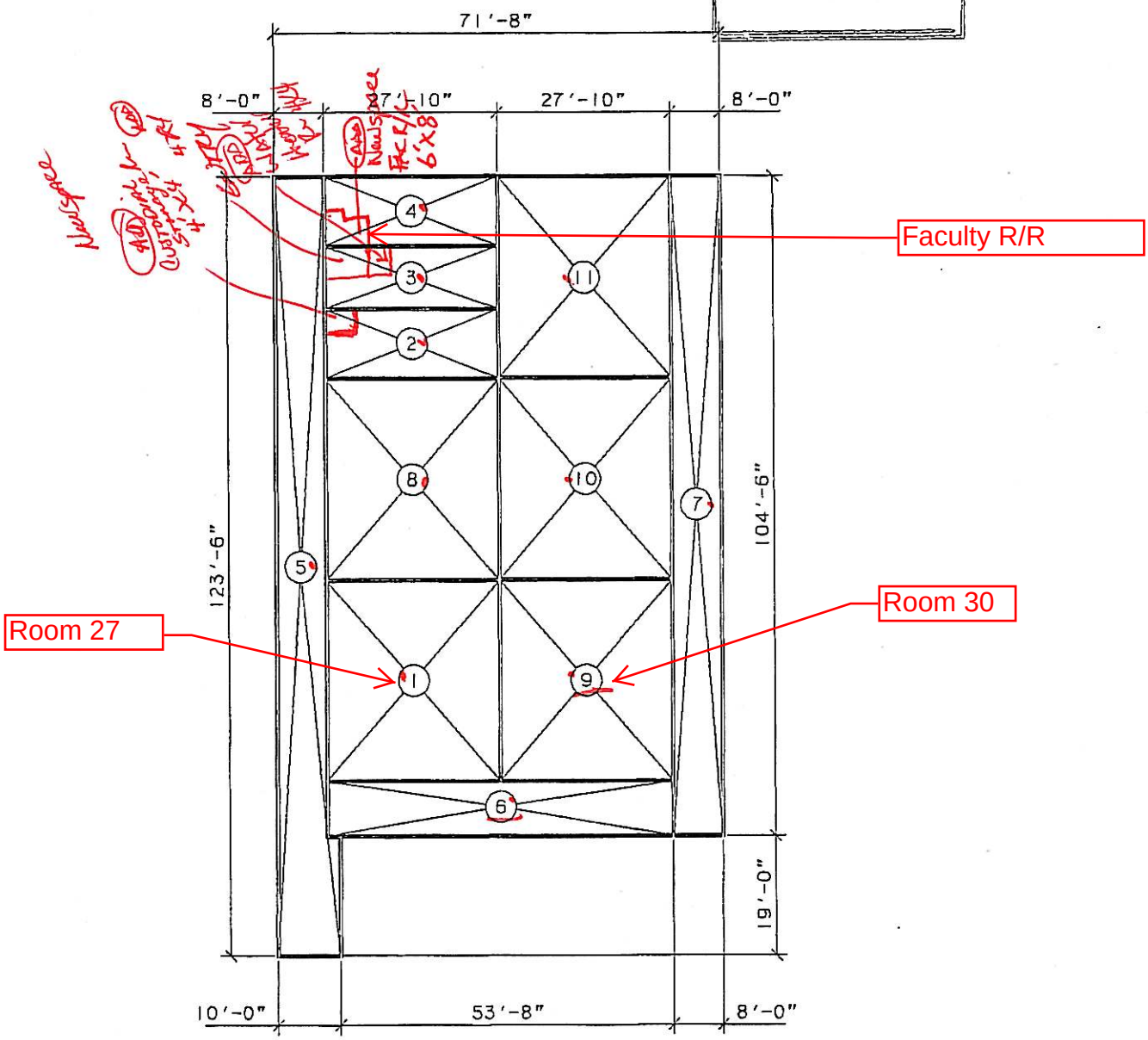

PLOT SCALE: 1"=20'-0"

AUTHORIZED AGENT
LOS ANGELES UNIFIED SCHOOL DISTRICT

DATE: 01/05/95
SHEET 13 OF 41 SHEETS

LOS ANGELES SCHOOL DISTRICT

LOCATION 2323

DIAGRAM OF BUILDING AREAS

APPLICATION NO. 22/

SCHOOL: BASSETT STREET SCHOOL

ADDRESS: 15756 BASSETT STREET
VAN NUYS, CA 91406

DISTRICT: LOS ANGELES UNIFIED SCHOOL DISTRICT

PLOT PLANS AND
ALLOTMENTS UNIT
IBM TOWER - ROOM 420

BUILDING 6

SPACE	DESCRIPTION	DIMENSIONS	AREA
1	GENERAL CLASSROOM 27	27'10", 31'10", 27'10", 31'10"	886
2	GIRL'S TOILET	27'10", 11'0", 27'10", 11'0"	306
3	CUSTODIAN ROOM Hopper	27'10", 10'0", 27'10", 10'0"	278
4	BOY'S TOILET	27'10", 11'0", 27'10", 11'0"	306
5	ARCADES	10'0", 19'0", 2'0", 104'6", 8'0", 123'6"	342 (1/3)
6	ARCADES	55'8", 8'9", 55'8", 8'9"	162 (1/3)
7	ARCADES	8'0", 104'6", 8'0", 104'6"	279 (1/3)
8	GENERAL CLASSROOM 26	27'10", 31'11", 27'10", 31'11"	888
9	GENERAL CLASSROOM 30	27'10", 31'11", 27'10", 31'11"	888
10	GENERAL CLASSROOM 29	27'10", 31'11", 27'10", 31'11"	888
11	GENERAL CLASSROOM 28	27'10", 31'11", 27'10", 31'11"	888
		TOTAL	6111
		BUILDING TOTAL	6111

Note: space #2 has New space
ADD CUSTODIAL STORAGE Rm 4'X4

Space #3 has New space
ADD WATER HEATER Rm 4'X4'
ENTRY 4'X4

Space #4 has New space
ADD Faculty R/R
6'X8'

AUTHORIZED AGENT
LOS ANGELES UNIFIED SCHOOL DISTRICT

DATE: 01/05/95
SHEET 14 OF 41 SHEETS

LOS ANGELES SCHOOL DISTRICT
DIAGRAM OF BUILDING AREAS

LOCATION 2323
APPLICATION NO. 22/
DRAWING Building D (006DAN)
BUILDING 5

BASSETT STREET ELEMENTARY SCHOOL (2323)
ADA IMPROVEMENTS
CNS ENVIRONMENTAL, INC

DISTRICT: LOS ANGELES UNIFIED SCHOOL DISTRICT

PLOT PLANS AND
ALLOTMENTS UNIT
IBM TOWER - ROOM 420

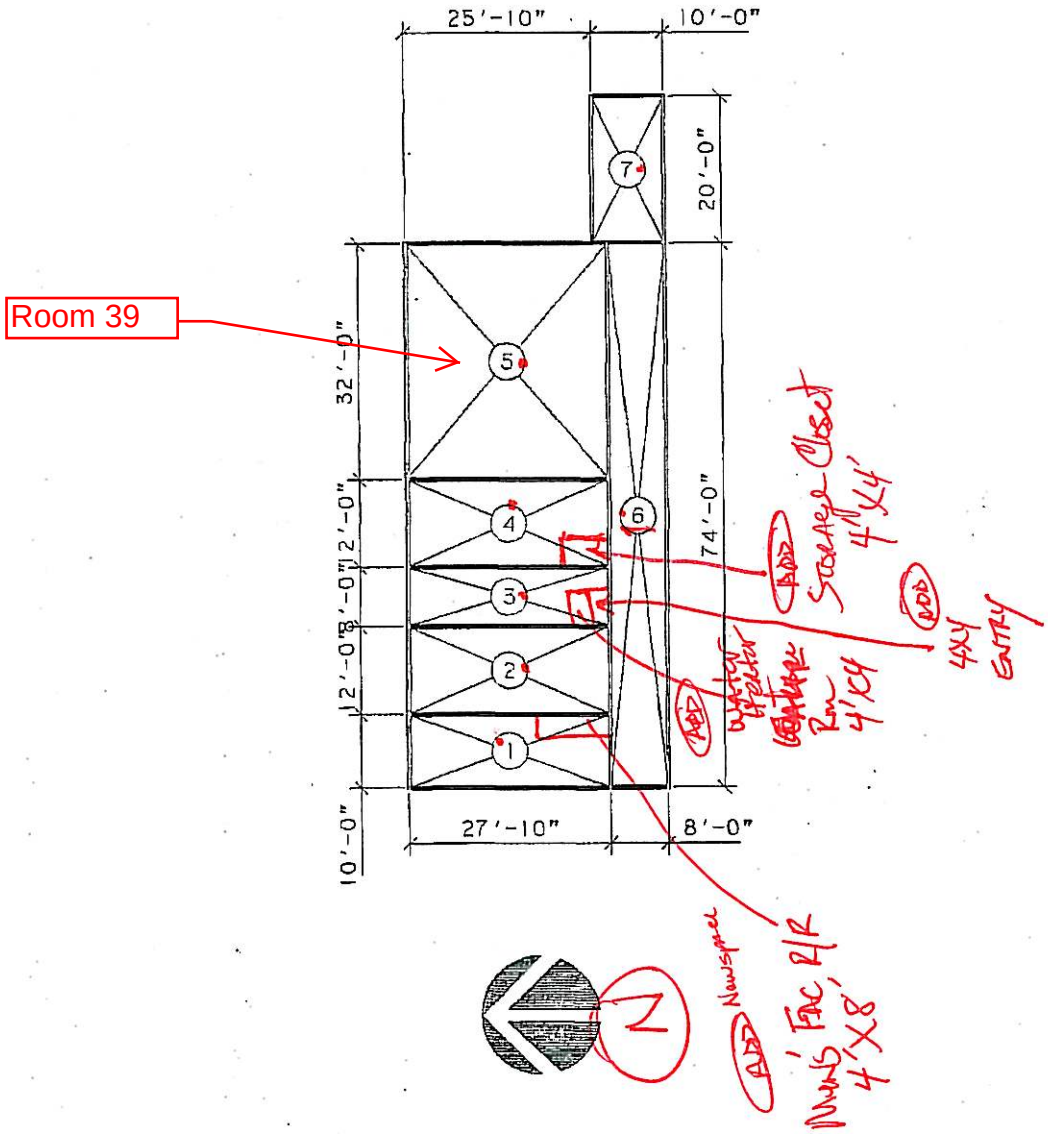

PLOT SCALE: 1"=20'-0"

AUTHORIZED AGENT
LOS ANGELES UNIFIED SCHOOL DISTRICT

DATE: 01/05/95
SHEET 11 OF 41 SHEETS

LOS ANGELES SCHOOL DISTRICT

LOCATION 2323

DIAGRAM OF BUILDING AREAS

APPLICATION NO. 22/

SCHOOL: BASSETT STREET SCHOOL

ADDRESS: 15756 BASSETT STREET
VAN NUYS, CA 91406

DISTRICT: LOS ANGELES UNIFIED SCHOOL DISTRICT

PLOT PLANS AND
ALLOTMENTS UNIT
IBM TOWER - ROOM 420

BUILDING 5

SPACE	DESCRIPTION	DIMENSIONS	AREA
1	BOOK ROOM / Ball Room	27'10", 10'0", 27'10", 10'0"	278
2	BOY'S TOILET	27'10", 12'0", 27'10", 12'0"	334
3	CUSTODIAN ROOM / PM OFFICE	27'10", 8'0", 27'10", 8'0"	223
4	GIRL'S TOILET	27'10", 12'0", 27'10", 12'0"	334
5	GENERAL CLASSROOM 39 Computer LAB	27'10", 32'0", 27'10", 32'0"	891
6	ARCADES	8'0", 74'0", 8'0", 74'0"	197 (1/3)
7	ARCADES	10'0", 20'0", 10'0", 20'0"	67 (1/3)
		TOTAL	2324
		BUILDING TOTAL	2324

Note: space # 4 has New space
ADD STORAGE closet 4'x4'

Space # 3 has New space
ADD WATER HEATER Rm 4'x4'
ADD ENTRY 4'x4'

Space # 1 has New space
ADD MENS FAC R/L 4'x8'

AUTHORIZED AGENT
LOS ANGELES UNIFIED SCHOOL DISTRICT

DATE: 01/05/95
SHEET 12 OF 41 SHEETS

LOS ANGELES SCHOOL DISTRICT

DIAGRAM OF BUILDING AREAS

LOCATION 2323

APPLICATION NO. 22/

DRAWING

BASSETT STREET ELEMENTARY SCHOOL (2323)
ADA IMPROVEMENTS
CNS ENVIRONMENTAL, INC

Kindergarten Building (007DAN)

DISTRICT: LOS ANGELES UNIFIED SCHOOL DISTRICT

PLOT PLANS AND ALLOTMENTS UNIT
IBM TOWER - ROOM 420

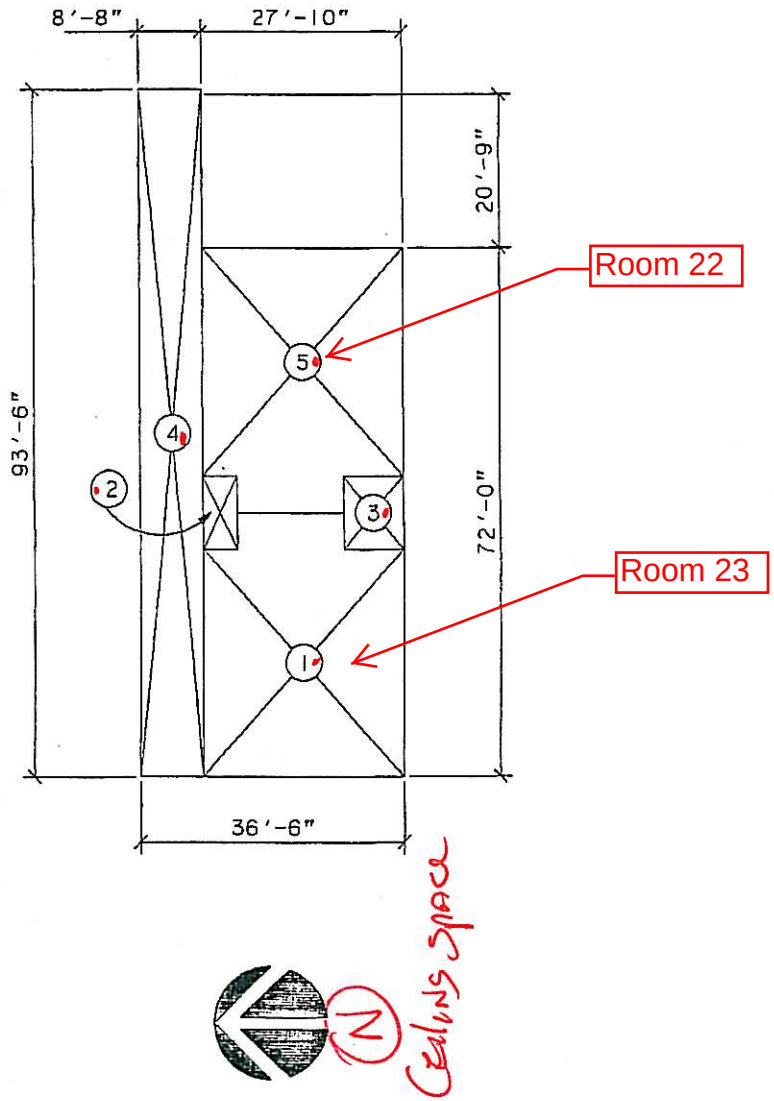

PLOT SCALE: 1"=20'-0"

AUTHORIZED AGENT
LOS ANGELES UNIFIED SCHOOL DISTRICT

DATE: 01/05/95
SHEET 5 OF 41 SHEETS

LOS ANGELES SCHOOL DISTRICT

LOCATION 2323

DIAGRAM OF BUILDING AREAS

APPLICATION NO. 22/

SCHOOL: BASSETT STREET SCHOOL

ADDRESS: 15756 BASSETT STREET
VAN NUYS, CA 91406

DISTRICT: LOS ANGELES UNIFIED SCHOOL DISTRICT

PLOT PLANS AND
ALLOTMENTS UNIT
IBM TOWER - ROOM 420

BUILDING 2

SPACE	DESCRIPTION	DIMENSIONS	AREA
1	KINDERGARTEN CLASSROOM 23	27'10", 31'0", 8'4", 5'0", 14'9", 5'0", 4'9", 31'0"	937
2	STORAGE	4'9", 10'0", 4'9", 10'0"	48
3	TOILET childrens w/ access panel	8'4", 10'0", 8'4", 10'0"	83
4	ARCADES	8'8", 93'6", 8'8", 93'6"	270 (1/3)
5	KINDERGARTEN CLASSROOM 22	4'9", 5'0", 14'9", 5'0", 8'4", 31'0", 27'10", 31'0"	937
		TOTAL	2275
		BUILDING TOTAL	2275

AUTHORIZED AGENT
LOS ANGELES UNIFIED SCHOOL DISTRICT

DATE: 01/05/95
SHEET 6 OF 41 SHEETS

Sample Material:

250sf = ACCM Asphalt Paving (CORE)
Sample #: 21-23

235sf • Asphalt Paving - Patch (CORE)
Sample #: 24-26

Grounds (2323-G) AREA "F" w/ Patch #4

Area "F" with Patch #4 -ACCM Asphalt Paving ≈ 485ft²

Bassett Elementary School (2323)
15756 Bassett St., Lake Balboa, CA 91406
ADA Improvements Project
Sampled By: CNS Eric Bracamontes
Sample Date: 07-12-2024

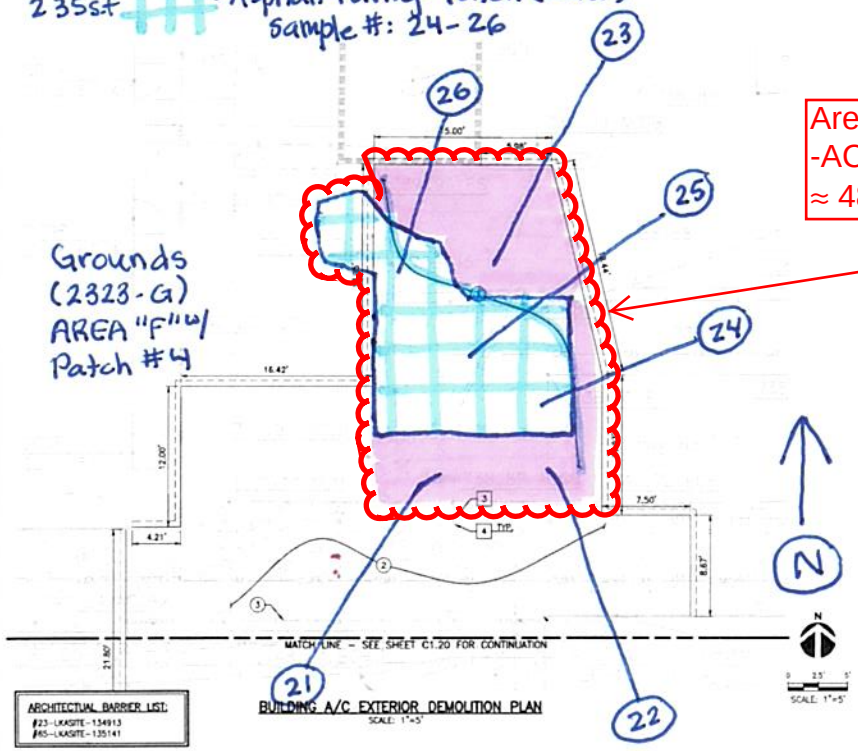

ARCHITECTUAL BARRIER LIST:
#23-LKASITE-134913
#65-LKASITE-135141

BUILDING A/C EXTERIOR DEMOLITION PLAN
SCALE: 1"=5'

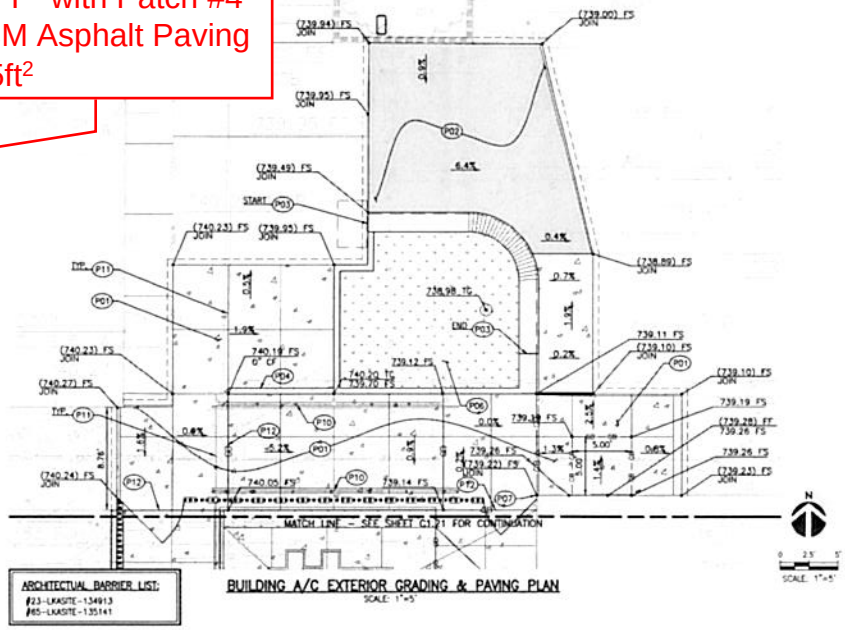

ARCHITECTUAL BARRIER LIST:
#23-LKASITE-134913
#65-LKASITE-135141

BUILDING A/C EXTERIOR GRADING & PAVING PLAN
SCALE: 1"=5'

GENERAL DEMOLITION NOTES:

1. CONTRACTOR TO CLEAR PROJECT SITE AREA WITHIN THE CONFINES OF THE DEMOLITION LIMIT LINE. THE CONTRACTOR SHALL DEMOLISH AND REMOVE FROM THE SITE ALL EXISTING UTILITIES, STRUCTURES, PLANTERS, TREES, AND ALL OTHER SITE FEATURES, UNLESS OTHERWISE NOTED ON THE PLAN.
2. REMOVAL OF LANDSCAPING SHALL INCLUDE ROOTS AND ORGANIC MATERIALS.
3. THE CONTRACTOR SHALL BE RESPONSIBLE FOR OBTAINING ANY AND ALL PERMITS AND SHALL PAY ALL FEES NECESSARY FOR ENCROACHMENT, GRADING, DEMOLITION AND DISPOSAL OF SAID MATERIALS AS REQUIRED BY PRIVATE, LOCAL AND STATE JURISDICTIONS.
4. THE CONTRACTOR SHALL BE RESPONSIBLE FOR A SITE INSPECTION TO FULLY ACKNOWLEDGE THE EXTENT OF THE DEMOLITION WORK.
5. THE CONTRACTOR SHALL VERIFY AND LOCATE ALL EXISTING ABOVE AND UNDERGROUND UTILITIES. LOCATIONS SHOWN ON THE PLANS ARE APPROXIMATE AND ARE SHOWN FOR GENERAL INFORMATION ONLY.
6. DAMAGE TO ANY EXISTING UTILITIES AND SERVICES TO REMAIN SHALL BE THE RESPONSIBILITY OF THE CONTRACTOR. CONTRACTOR SHALL REPAIR AND/OR REPLACE IN KIND.
7. EROSION CONTROL MEASURES SHALL BE IMPLEMENTED TO PREVENT DEBRIS AND UNSUITABLE MATERIALS FROM ENTERING STORM DRAINS, SANITARY SEWERS AND STREETS.
8. DUST CONTROL SHALL BE IMPLEMENTED DURING DEMOLITION.
9. DEMOLITION IS LIMITED TO WITHIN DEMOLITION LIMIT LINE UNLESS NOTED OTHERWISE.
10. THE CONTRACTOR SHALL VERIFY THE LOCATION AND QUANTITY OF EXISTING SURFACE STRUCTURES AND SHALL BE SOLELY RESPONSIBLE FOR ANY UNIDENTIFIED UTILITIES, IMPROVEMENTS, TREES, ETC. TO BE DEMOLISHED AND REMOVED WITHIN THE DEMOLITION LIMIT LINE, INCLUDING APPURTENANT FOUNDATIONS OR SUPPORTS.
11. DEMOLITION CALLOUTS IN THIS SECTION ARE REPRESENTATIVE OF WHAT IS TO BE DONE, NOT AN ITEMIZED ACCOUNTING FOR EACH PIPE, CATCH BASIN, MANHOLE, VAULT, ETC. THAT IS TO BE DEMOLISHED, REMOVED AND DISPOSED OF.

DEMOLITION NOTES:

PROTECT-IN-PLACE

1. PROTECT-IN-PLACE EXISTING FENCE.
2. PROTECT-IN-PLACE EXISTING LANDSCAPE AREA.
3. PROTECT-IN-PLACE EXISTING ROOF DRAIN. PER DETAIL 9 ON SHEET C5.00.
4. PROTECT-IN-PLACE EXISTING COLUMN PER DETAIL 8 ON SHEET C5.00.

DEMOLISH & REMOVE

1. DEMOLISH & REMOVE EXISTING ASPHALT PAVEMENT.
2. DEMOLISH & REMOVE EXISTING CONCRETE PAVEMENT.
3. DEMOLISH & REMOVE EXISTING FENCE.
4. DEMOLISH & REMOVE EXISTING CATCH BASINS.
5. DEMOLISH & REMOVE EXISTING PAVEMENT ADJACENT TO BUILDING PER DETAIL 10 ON SHEET C5.00.

LEGEND:

SAWCUT AND JOIN

EXISTING FOUNDATION

PAVING CONSTRUCTION NOTES

- P01 CONCRETE PAVEMENT. PER DETAIL 2 ON SHEET C5.00.
- P02 ASPHALT PAVEMENT. PER DETAIL 3 ON SHEET C5.00.
- P03 CONCRETE SEAT WALL. PER DETAILS ON ARCHITECTURAL SHEET A1.42.
- P04 CONCRETE CURB. PER DETAIL 6 ON SHEET C5.00.
- P05 DECOMPOSED GRANITE. REFER TO LANDSCAPE SHEETS L3.02 AND L3.03 FOR PLANTING DETAILS.
- P06 LANDSCAPE. REFER TO LANDSCAPE SHEETS L3.02 AND L3.03 FOR PLANTING DETAILS.
- P07 CONCRETE PAVEMENT REPLACEMENT AROUND EXISTING COLUMN. PER DETAIL 8 ON SHEET C5.00.
- P08 ROOF DRAIN ADJUSTMENT PER DETAIL 9 ON SHEET C5.00.
- P09 CONCRETE PAVEMENT CONNECTION TO PROPOSED LANDSCAPE/DG. PER DETAIL 2 ON SHEET C5.00.
- P10 HANDRAIL. PER DETAILS 2 & 11, ARCHITECTURAL SHEET A9.8.
- P11 CONTROL JOINT PER DETAIL 7, SHEET C5.01.
- P12 EXPANSION JOINT PER DETAIL 11, SHEET C5.00.

LEGEND

SAWCUT AND JOIN

GRADE BREAK

CONCRETE PAVING (REFER TO SHEET C5.00 FOR DETAILS)

ASPHALT (REFER TO SHEET C5.00 FOR DETAILS)

LANDSCAPE (REFER TO LANDSCAPE PLANS FOR DETAILS)

EXISTING FOUNDATION

NOTE TO CONTRACTOR/CONSTRUCTION SURVEYOR:

CONSTRUCTION STAKING FOR IMPROVEMENTS SHOWN ON THESE PLANS SHALL BE PERFORMED BY A LICENSED LAND SURVEYOR. CONSTRUCTION STAKING SURVEYOR SHALL BE RESPONSIBLE FOR COORDINATION OF THESE PLANS WITH SOURCE DRAWINGS PREPARED BY ARCHITECT, LANDSCAPE ARCHITECT, STRUCTURAL ENGINEER, MEP CONSULTANT AND ANY OTHER DISCIPLINE PRIOR TO START OF STAKING AND CONSTRUCTION. ANY DISCREPANCIES THAT OCCUR SHALL BE BROUGHT TO THE ATTENTION OF THE ARCHITECT PRIOR TO THE START OF CONSTRUCTION SO THAT A CLARIFICATION CAN BE ISSUED.

NOTES

1. CONTRACTOR TO VERIFY LIMITS OF HARDSCAPE REPLACEMENT MATCH EXISTING CONSTRUCTION JOINTS. CONTRACTOR TO NOTIFY ENGINEER IF DISCREPANCIES ARE FOUND.

DIVISION OF THE STATE ARCHITECT

DSA APP # 03-XXXXXX

LOS ANGELES UNIFIED SCHOOL DISTRICT

ASSET MANAGEMENT
FACILITIES SERVICES DIVISION
333 S. BEAUDRY AVENUE, 23RD FLOOR
LOS ANGELES, CALIFORNIA 90017

PROJECT TITLE AND SCHOOL LOCATION

BASSETT STREET ELEMENTARY SCHOOL
15756 BASSETT ST
LAKE BALBOA, CA 91406

VOLUNTARY BARRIER REMOVAL

COLIN NO: 10371927

COMMISSIONED ARCHITECT

Swift Lee Office
543A S. Raymond Ave
Pasadena, CA 91105
T. 323.257.8200
www.swifteeoffice.com

CONSULTANT

kpff

STAMPS/SEALS

50% CD	12.18.23
100% CD PROGRESS SET	04.02.24
100% CD	06.03.24

SHEET TITLE

BUILDING A-C EXTERIOR DEMOLITION, GRADING AND PAVING PLAN

PROJECT NO.: PROJECT ARCH:
DRAWN: CHECKED:
SHEET NUMBER

C1.19

SHEET OF

INTEROFFICE CORRESPONDENCE
Los **A**ngeles **U**nified **S**chool **D**istrict
Office of Environmental Health and Safety

TO: Monica Kamin
Design Manager, Contract Professional
Asset Management / Facilities Planning & Development

DATE: February 7, 2025

FROM: Steven Morrill, Contract Professional SM
Site Assessment Project Manager
Office of Environmental Health and Safety

SUBJECT: BASSETT STREET ELEMENTARY SCHOOL
ADA IMPROVEMENTS (COLIN #10373370)
RULE 1466 SOIL SAMPLING DETERMINATION

This correspondence has been prepared to document soil determination in regard to the applicability of South Coast Air Quality Management District (SCAQMD) Rule 1466 to the ADA Improvements project at Bassett Street Elementary School, 15756 Bassett Street, Van Nuys, California 91406. In accordance with Office of Environmental Health and Safety (OEHS) guidelines, soil sampling was conducted to determine the presence of subsurface compounds in underlying soils associated with this project.

On January 3, 2025, at the direction of OEHS staff, Parsons conducted soil sampling within the ADA improvement areas identified in the Asphalt Testing and Soil Disturbance Plan, Exhibits 1 through 5, submitted to OEHS from Asset Management. OEHS has determined that SCAQMD Rule 1466 does not apply to the subject project for the following reason:

- Results of the sampling investigation revealed that for all sample locations, identified compounds covered by SCAQMD Rule 1466 were classified as less than the reporting limit or detected contaminant concentrations were below associated regulatory thresholds.

As a precaution, dust mitigation measures shall be implemented during any project-related excavation and/or earth-disturbing activities. Additionally, if any stained or odorous soil is observed during construction, stop work shall be initiated and OEHS shall be notified. If the project requires the disposal of excess soil, soil sampling per the LAUSD Specification Section 01-4524 will be required prior to characterization and acceptance for off-site disposal.

Should you have any questions or concerns regarding this memorandum, please contact OEHS Site Assessment Project Manager Steven Morrill at (213) 241- 4672 or at steven.morrill@lausd.net.

ATTACH: *Soil Sampling and Analysis Report, Bassett Street Elementary School*, by Parsons, dated January 23, 2025

COPY: Project File

PARSONS

100 West Walnut Street • Pasadena, CA 91124 • (626) 440-2000 • Fax: (626) 440-2630 • www.parsons.com

January 23, 2025

Mr. Steve Morrill
Los Angeles Unified School District
Office of Environmental Health and Safety
333 North Beaudry Street, 21st Floor
Los Angeles, CA 90017

Site: **Los Angeles Unified School District**
Bassett Street Elementary School
15756 Bassett Street, Van Nuys, CA 91406

Reference: **South Coast Air Quality Management District – Rule 1466**
Soil Sampling and Analysis Report

Mr. Morrill,

This Soil Sampling and Analysis Report (Report) is submitted to the Los Angeles Unified School District (LAUSD) Office of Environmental Health and Safety (OEHS) to document Parson's environmental soil sampling and analyses activities conducted at the Bassett Street Elementary School (Site) located at 15756 Bassett Street in Van Nuys, California 91406 (Figure 1). Per LAUSD's request, soil samples were collected, analyzed, and the data was tabulated in this document to determine if SCAQMD Rule 1466 will apply to the future work in the subject areas and to evaluate the potential import/export of the soil from the Site per Section 01 4524.

1.0 INTRODUCTION

This Report summarizes Parson's soil sampling and analyses activities for 11 shallow soil borings (SB-1 through SB-11) that were completed in various areas around the Site (Figure 2) where pavement is anticipated to be removed and soil is anticipated to be disturbed, during future school improvement activities. Attachments to this Report include the tabulated summaries of analytical data (Tables 1 through 5), a figure depicting the Site and approximate boring locations (Figure 2), and the private utility locating, certified analytical laboratory reports (Appendices A and B).

2.0 PRE-FIELD AND FIELD ACTIVITIES

The following activities were completed prior to the intrusive soil sampling work:

- A Site-specific Health and Safety Plan was prepared.
- A Site-walk was held on December 3, 2024; a representative from Parsons and LAUSD OEHS attended. The proposed soil boring locations were marked on the ground with paint by LAUSD-OEHS staff on this day. LAUSD OEHS staff also visited the Site on December 23, 2024, to re-mark several locations.
- Underground Service Alert was notified of the proposed work representatives from the utility companies then either marked their subsurface structures or contacted a Parsons representative to discuss potential utility and subsurface structure conflicts.

- On January 3, 2025, the proposed boring locations were geophysically surveyed by Subsurface Surveys, a private utility locator, for the presence of underground utilities using geophysical methods (including ground-penetrating radar, electromagnetic utility locating, and deep-search metal detector). Appendix A has the private utility locating report.

Soil sampling field activities were performed on January 3, 2025, including pavement coring, hand augering, soil sampling, and backfilling of borings. Soil samples were collected at depths of 0.0 to 0.5-, and 1.0 to 1.5-feet below the top of the soil surface at the boring locations, using a hand auger. Boring logs are presented in Appendix B.

Following soil sampling, each boring was backfilled with soil cuttings and completed at the top with concrete to match the surrounding grade. Between boreholes, the head of the hand auger was decontaminated to minimize the potential for cross-contamination between samples.

Each soil sample was collected in a new, laboratory-provided glass jar. The glass jars were labeled, placed in bubble wrap, and immediately placed into iced coolers for temporary storage. The cooler was sent to the certified analytical laboratory for chemical analyses after the sampling was complete. Samples inside the coolers were maintained at 4 degrees Celsius (or below) using bagged ice. Chain-of-custody (CoC) protocol was followed for all soil samples collected for laboratory analyses. The CoCs accompanied the samples from the Site to the laboratory.

Two duplicate soil samples were collected. The samples were homogenized prior to placing the duplicate sample matrix in the sample container.

3.0 LABORATORY ANALYSES

The soil samples from the 11 boring locations were submitted to Orange Coast Analytical, Inc. in Tustin, California for:

- Cadmium, lead, chromium, nickel, and mercury using Method 6010B/7471A (Table 1)
- Arsenic using Method 6020 (Table 1)
- Hexavalent Chromium (Cr[VI]) using Method 7199 (Table 1)
- Asbestos by PLM Count (Table 2)
- Organochlorine Pesticides (OCPs) using Method 8081A (Table 3)
- Polyaromatic Hydrocarbons (PAHs) using Method SIM 8270C (Table 4)
- Polychlorinated Biphenyls (PCBs) using Method 8082 (Table 5)

The laboratory analyzed the shallowest sample in each boring and held the deeper samples in each boring, pending review of the analytical results. Based on review of the shallow sample results, the deeper samples (1.0 to 1.5-feet below the top of the soil surface) were not analyzed.

Laboratory analytical results from the soil sampling activities are tabulated on Tables 1 through 5, which also list the risk-based screening levels, if it exists, for each analyte. A copy of the certified laboratory analytical report is provided in Appendix C.

4.0 SCREENING LEVELS

For direct exposures to soils, the DTSC's (2015) Preliminary Endangerment Assessment Manual states that risk-based screening levels used should be "the USEPA Regional Screening Level (RSL) for residential land use, modified as necessary by the DTSC in HHRA Note 3." Thus, the

screening levels used here are, in general, the USEPA RSLs (2024) unless DTSC (2022) has published a screening value of its own, termed the DTSC-SLs. Chemicals with special considerations are discussed in more detail below. The screening levels are referred to here and after as RSLs.

Arsenic: The residential risk-based screening levels from USEPA (2018) and DTSC (2018) of 0.68 and 0.11 milligrams per kilogram (mg/kg) are well below naturally occurring background concentrations. Therefore, several toxicologists at DTSC (Chernoff et al. 2008) conducted a statistical evaluation of background data for arsenic in soils from Los Angeles, Orange, Riverside, San Bernardino, and San Diego Counties to derive an upper-bound background threshold value for arsenic. Based on an evaluation of 1,086 data points, the authors derived a background threshold value for arsenic of 12 mg/kg, which is used here as the arsenic screening level.

Lead: Adverse health effects associated with exposure to lead have been correlated with concentrations of lead in whole blood. Although USEPA uses 10 micrograms per deciliter (µg/dl) as the threshold level of concern, California (OEHHA 2007) uses 1 µg/dl. A screening level of 80 mg/kg protective of a 90th percentile estimate of 1 µg/dl blood lead concentration in children was calculated by Cal EPA (OEHHA 2009), which is used by DTSC (2022). This standard represents the concentration of lead in soil that will result in a 90th percentile estimate of a 1 µg/dl increase in blood lead in the most sensitive receptor (i.e., child or fetus). DTSC states that individual samples may exceed 80 mg/kg, as long as the 95% UCL is below 80 mg/kg and hot spots are not present.

5.0 ANALYTICAL RESULTS

Concentrations of arsenic, cadmium, chromium, hexavalent chromium, nickel, lead and mercury in the 11 primary and two duplicate soil samples collected are summarized in Table 1. The highest arsenic concentration detected was 4.8 milligrams per kilogram (mg/kg), in sample SB-7. The DTSC screening level for arsenic in soil is 12 mg/kg. The highest lead concentration detected was 19 mg/kg, in sample SB-8. The DTSC screening level for lead in soil is 80 mg/kg. Arsenic and lead concentrations were below their respective RSLs in all samples.

ACM was not detected in any of the soil samples analyzed (Table 2).

Only one OCP compound was detected above the laboratory reporting limit; 4,4'-DDE (which was only detected in one sample, SB-11-0.0). The one OCP compound detection is below its RSL. The OCP results are summarized in Table 3.

Two samples contained a number of PAH compounds detected above the laboratory reporting limit. All PAH compounds detected were below their respective RSLs. The PAH results are summarized in Table 4.

PCB compounds were not detected above their laboratory reporting limits in any of the soil samples analyzed (Table 5).

6.0 CONCLUSIONS

The following conclusions were derived from the soil sampling conducted at LAUSD's Bassett Street Elementary School:

- Arsenic, lead and other selected metal concentrations were all below their RSLs.
- PCBs and ACMs were not detected above their respective laboratory reporting limits in any of the 13 soil samples analyzed.

- One OCP compound (4,4'-DDE) was detected above its reporting limit, in one sample. No other OCPs were detected. The one 4,4'-DDE detection is below its screening level.
- Two samples contained several PAH compounds detected above the laboratory reporting limit; however, all PAH compounds detected were below their respective RSLs.

7.0 REFFERENCES

Chernoff G, Bosan W, Oudiz D. 2008. *Determination of a Southern California regional background arsenic concentration in soil*.

DTSC 2015. *Preliminary Endangerment Assessment Manual. A guidance manual for evaluating hazardous substance release sites*.

DTSC, 2022. *HERO HHRA Note Number 3, DTSC-Modified Screening Levels (DTSC-SLs).* January.

OEHHA, 2007. Development of health criteria for schools site risk assessment pursuant to Health and Safety Code Section 901(g): child-specific benchmark change in blood lead concentration for school site risk assessment.

OEHHA, 2009. *Revised California human health screening levels for lead*.

USEPA (US Environmental Protection Agency). 2024. *Regional Screening Levels for Chemical Contaminants at Superfund Sites*. November. Available online at https://www.epa.gov/risk/regional-screening-levels-rsls

If you have questions or comments regarding this document, please contact me at 626-344-6565.

Sincerely,

Pete Shair, PG 8362
Project Geologist

PROFESSIONAL GEOLOGIST
PETE SHAIR
No. 8362
EXP. 5/31/25
STATE OF CALIFORNIA

Attachments:

Table 1 – Analytical Results for Select Metals in Soil
Table 2 – Analytical Results for Asbestos Containing Material in Soil
Table 3 – Analytical Results for Organochlorine Pesticides in Soil
Table 4 – Analytical Results for Polyaromatic Hydrocarbons in Soil
Table 5 – Analytical Results for Polychlorinated Biphenyls in Soil

Figure 1 – Site Location
Figure 2 – Soil Boring Locations

Appendix A – Private Utility Locate Report
Appendix B – Boring Logs
Appendix C – Certified Laboratory Analytical Report

TABLES

TABLE 1
ANALYTICAL RESULTS FOR SELECT METALS IN SOIL
LAUSD - BASSETT STREET ELEMENTARY SCHOOL

		Sample Depth	Arsenic	Cadmium	Chromium[2]	Cr(VI)	Lead	Nickel	Mercury[3]
	Units	ft bgs	mg/kg	mg/kg	mg/kg	mg/l	mg/L	mg/kg	mg/kg
	Test Methods	--	6020	6010B	6010B	7199	6010B	6010B	EPA 7471A
	Screening Levels[1]	--	12	7.1	85000	0.95	80	820	13
Sample ID	Sample Date								
SB-1-0.0	1/3/2025	0.0 - 0.5	**2.9**	**1.0**	**22**	**0.41**	**4.5**	**19**	ND<0.10
SB-2-0.0	1/3/2025	0.0 - 0.5	**4.0**	**1.3**	**21**	**0.56**	**11**	**19**	ND<0.10
SB-3-0.0	1/3/2025	0.0 - 0.5	**2.4**	**0.71**	**15**	**0.26**	**4.0**	**12**	ND<0.10
SB-3-0.0D	1/3/2025	0.0 - 0.5	**2.1**	**1.0**	**20**	**0.36**	**7.2**	**17**	ND<0.10
SB-4-0.0	1/3/2025	0.0 - 0.5	**2.3**	**0.98**	**17**	**0.27**	**2.6**	**13**	ND<0.10
SB-5-0.0	1/3/2025	0.0 - 0.5	**2.7**	**0.85**	**18**	**0.23**	**13**	**15**	ND<0.10
SB-6-0.0	1/3/2025	0.0 - 0.5	**3.7**	**0.94**	**20**	**0.32**	**3.5**	**17**	ND<0.10
SB-7-0.0	1/3/2025	0.0 - 0.5	**4.8**	**1.2**	**23**	**0.32**	**6.2**	**20**	ND<0.10
SB-8-0.0	1/3/2025	0.0 - 0.5	**4.0**	**0.73**	**18**	**0.14**	**19**	**15**	ND<0.10
SB-9-0.0	1/3/2025	0.0 - 0.5	**3.6**	**0.92**	**22**	**0.16**	**3.5**	**17**	ND<0.10
SB-9-0.0D	1/3/2025	0.0 - 0.5	**2.4**	**0.57**	**14.0**	ND<0.12	**2.4**	**11**	ND<0.10
SB-10-0.0	1/3/2025	0.0 - 0.5	ND<1.0	ND<0.50	**3.5**	**0.20**	**1.2**	**2.0**	ND<0.10
SB-11-0.0	1/3/2025	0.0 - 0.5	**4.7**	**1.2**	**24**	**0.45**	**12**	**20**	ND<0.10

Notes:
mg/kg - miligrams per kilogram
mg/L - milligrams per liter
ft bgs - feet below ground surface
< - not detected less than the value given
Cr(VI) - hexavalent chromium
Yellow highlighted cell - concentration exceeds respective screening level
J - estimated value
1 - Residential screening levels were taken from the following sources:
Arsenic: DTSC. 2020. Southern California Ambient Arsenic Screening Level. HHRA Note 11. December.
Other metals were taken from the lesser of the following sources:
DTSC. 2022a. DTSC-modified Screening Levels. HHRA Note 3. May.
USEPA. 2024. Regional Screening Level. THQ = 1. November.
2 - Screening level for "Chromium(III) (Soluble Compounds)" used
3 - Screening level for mercuric chloride used
"D" at end of sample ID denotes duplicate sample
ND = Analyte is not detected below the Method Detection Limit
NA - not applicable

TABLE 2
ANALYTICAL RESULTS FOR ASBESTOS CONTAINING MATERIAL IN SOIL
LAUSD - BASSETT STREET ELEMENTARY SCHOOL

Sample ID	Sample Collection Date	Depth (ft bgs)	Asbestos Type
SB-1-0.0	1/3/2025	0.0 - 0.5	none detected
SB-2-0.0	1/3/2025	0.0 - 0.5	none detected
SB-3-0.0	1/3/2025	0.0 - 0.5	none detected
SB-3-0.0D	1/3/2025	0.0 - 0.5	none detected
SB-4-0.0	1/3/2025	0.0 - 0.5	none detected
SB-5-0.0	1/3/2025	0.0 - 0.5	none detected
SB-6-0.0	1/3/2025	0.0 - 0.5	none detected
SB-7-0.0	1/3/2025	0.0 - 0.5	none detected
SB-8-0.0	1/3/2025	0.0 - 0.5	none detected
SB-9-0.0	1/3/2025	0.0 - 0.5	none detected
SB-9-0.0D	1/3/2025	0.0 - 0.5	none detected
SB-10-0.0	1/3/2025	0.0 - 0.5	none detected
SB-11-0.0	1/3/2025	0.0 - 0.5	none detected

Notes:
Analyzed by PLM EPA 600/R-93/116 (<1%)
PLM - Polarized Light Microscopy
Ft bgs - feet below ground surface
"D" at end of sample ID denotes duplicate sample

TABLE 3
ANALYTICAL RESULTS FOR ORGANOCHLORINE PESTICIDES IN SOIL
LAUSD - BASSETT STREET ELEMENTARY SCHOOL

Sample ID	Sample Collection Date	Depth (ft bgs)	4,4'-DDE	All other OCPs
		Units	µg/kg	µg/kg
		Screening Levels[1]	2000	NA
SB-1-0.0	1/3/2025	0.0 - 0.5	ND<5.0	none detected
SB-2-0.0	1/3/2025	0.0 - 0.5	ND<5.0	none detected
SB-3-0.0	1/3/2025	0.0 - 0.5	ND<5.0	none detected
SB-3-0.0D	1/3/2025	0.0 - 0.5	ND<5.0	none detected
SB-4-0.0	1/3/2025	0.0 - 0.5	ND<5.0	none detected
SB-5-0.0	1/3/2025	0.0 - 0.5	ND<5.0	none detected
SB-6-0.0	1/3/2025	0.0 - 0.5	ND<5.0	none detected
SB-7-0.0	1/3/2025	0.0 - 0.5	ND<5.0	none detected
SB-8-0.0	1/3/2025	0.0 - 0.5	ND<20	none detected
SB-9-0.0	1/3/2025	0.0 - 0.5	ND<5.0	none detected
SB-9-0.0D	1/3/2025	0.0 - 0.5	ND<5.0	none detected
SB-10-0.0	1/3/2025	0.0 - 0.5	ND<5.0	none detected
SB-11-0.0	1/3/2025	0.0 - 0.5	**10**	not detected

Notes:
OCPs - Organochlorine Pesticides
ft bgs - feet below ground surface
Samples analyzed by Environmental Protection Agency Method 8081A.
"D" at end of sample ID denotes duplicate sample
NA - not applicable
1 - Residential soil screening levels were taken from the lesser of the following sources:
DTSC. 2022a. DTSC-modified Screening Levels. HHRA Note 3. May.
USEPA. 2024. Regional Screening Level. THQ = 1. November.

TABLE 4
ANALYTICAL RESULTS FOR POLYAROMATIC HYDROCARBONS IN SOIL
LAUSD - BASSETT STREET ELEMENTARY SCHOOL

Sample ID	Sample Collection Date	Depth (ft bgs)	Acenaph-thylene	Benzo(a)-pyrene	Benzo(g,h,i) perylene	Fluoran-thene	Pyrene	Phenan-threne	Indeno(1,2,3-cd)pyrene	All Other PAHs
		Units	**mg/kg**	**mg/kg**	**mg/kg**	**mg/kg**	**mg/kg**	**mg/kg**	**mg/kg**	**mg/kg**
		Screening Levels[1]	**NA**	**0.11**	**NA**	**2400**	**1800**	**NA**	**1.1**	**various**
SB-1-0.0	1/3/2025	0.0 - 0.5	ND<0.0050	ND<0.0050	ND<0.0050	ND<0.0065	ND<0.0065	ND<0.0050	ND<0.0050	Not Detected
SB-2-0.0	1/3/2025	0.0 - 0.5	**0.015**	**0.018**	**0.054**	**0.054**	**0.095**	**0.022**	**0.021**	Not Detected
SB-3-0.0	1/3/2025	0.0 - 0.5	ND<0.0050	ND<0.0050	ND<0.0050	ND<0.0065	ND<0.0065	ND<0.0050	ND<0.0050	Not Detected
SB-3-0.0D	1/3/2025	0.0 - 0.5	ND<0.0050	ND<0.0050	ND<0.0050	ND<0.0065	ND<0.0065	ND<0.0050	ND<0.0050	Not Detected
SB-4-0.0	1/3/2025	0.0 - 0.5	ND<0.0050	ND<0.0050	ND<0.0050	ND<0.0065	ND<0.0065	ND<0.0050	ND<0.0050	Not Detected
SB-5-0.0	1/3/2025	0.0 - 0.5	ND<0.0050	ND<0.0050	ND<0.0050	ND<0.0065	ND<0.0065	ND<0.0050	ND<0.0050	Not Detected
SB-6-0.0	1/3/2025	0.0 - 0.5	ND<0.0050	ND<0.0050	ND<0.0050	ND<0.0065	ND<0.0065	ND<0.0050	ND<0.0050	Not Detected
SB-7-0.0	1/3/2025	0.0 - 0.5	ND<0.0050	ND<0.0050	ND<0.0050	ND<0.0065	ND<0.0065	ND<0.0050	ND<0.0050	Not Detected
SB-8-0.0	1/3/2025	0.0 - 0.5	ND<0.0050	**0.0053**	**0.023**	ND<0.0065	ND<0.0065	ND<0.0050	ND<0.0050	Not Detected
SB-9-0.0	1/3/2025	0.0 - 0.5	ND<0.0050	ND<0.0050	ND<0.0050	ND<0.0065	ND<0.0065	ND<0.0050	ND<0.0050	Not Detected
SB-9-0.0D	1/3/2025	0.0 - 0.5	ND<0.0050	ND<0.0050	ND<0.0050	ND<0.0065	ND<0.0065	ND<0.0050	ND<0.0050	Not Detected
SB-10-0.0	1/3/2025	0.0 - 0.5	ND<0.0050	ND<0.0050	ND<0.0050	ND<0.0065	ND<0.0065	ND<0.0050	ND<0.0050	Not Detected
SB-11-0.0	1/3/2025	0.0 - 0.5	ND<0.0050	ND<0.0050	ND<0.0050	ND<0.0065	ND<0.0065	ND<0.0050	ND<0.0050	Not Detected

Notes:
mg/kg - milligrams per kilogram
PAHs - Polyaromatic Hydrocarbons
ft bgs - feet below ground surface
"D" at end of sample ID denotes duplicate sample
1 - Residential soil screening levels were taken from the lesser of the following sources:
DTSC. 2022a. DTSC-modified Screening Levels. HHRA Note 3. May.
USEPA. 2024. Regional Screening Level. THQ = 1. November.

TABLE 5
ANALYTICAL RESULTS FOR POLYCHLORINATED BIPHENYLS IN SOIL
LAUSD - BASSETT STREET ELEMENTARY SCHOOL

Sample ID	Sample Collection Date	Depth (ft bgs)	PCB-1016	PCB-1221	PCB-1232	PCB-1242	PCB-1248	PCB-1254	PCB-1260
		Units	µg/kg	µg/kg	µg/kg	µg/kg	µg/kg	µg/kg	µg/kg
		Screening Levels[1]	4000	200	170	230	230	240	240
SB-1-0.0	1/3/2025	0.0 - 0.5	<25	<25	<25	<25	<25	<25	<25
SB-2-0.0	1/3/2025	0.0 - 0.5	<25	<25	<25	<25	<25	<25	<25
SB-3-0.0	1/3/2025	0.0 - 0.5	<25	<25	<25	<25	<25	<25	<25
SB-3-0.0D	1/3/2025	0.0 - 0.5	<25	<25	<25	<25	<25	<25	<25
SB-4-0.0	1/3/2025	0.0 - 0.5	<25	<25	<25	<25	<25	<25	<25
SB-5-0.0	1/3/2025	0.0 - 0.5	<25	<25	<25	<25	<25	<25	<25
SB-6-0.0	1/3/2025	0.0 - 0.5	<25	<25	<25	<25	<25	<25	<25
SB-7-0.0	1/3/2025	0.0 - 0.5	<25	<25	<25	<25	<25	<25	<25
SB-8-0.0	1/3/2025	0.0 - 0.5	<100	<100	<100	<100	<100	<100	<100
SB-9-0.0	1/3/2025	0.0 - 0.5	<25	<25	<25	<25	<25	<25	<25
SB-9-0.0D	1/3/2025	0.0 - 0.5	<25	<25	<25	<25	<25	<25	<25
SB-10-0.0	1/3/2025	0.0 - 0.5	<25	<25	<25	<25	<25	<25	<25
SB-11-0.0	1/3/2025	0.0 - 0.5	<100	<100	<100	<100	<100	<100	<100

Notes:
1 - Residential soil screening levels were taken from the lesser of the following sources:
DTSC. 2022a. DTSC-modified Screening Levels. HHRA Note 3. May.
USEPA. 2024. Regional Screening Level. THQ = 1. November.
PCBs = polychlorinated biphenyls analyzed by Environmental Protection Agency Method 8082
µg/kg - micrograms per kilogram
< - not detected less than the value given
ft bgs - feet below ground surface
"D" at end of sample ID denotes duplicate sample

FIGURES

FIGURE 1

BASSETT STREET ELEMENTARY SCHOOL SITE MAP

Bassett Street Elementary School
15756 Bassett St,
Van Nuys, CA 91406

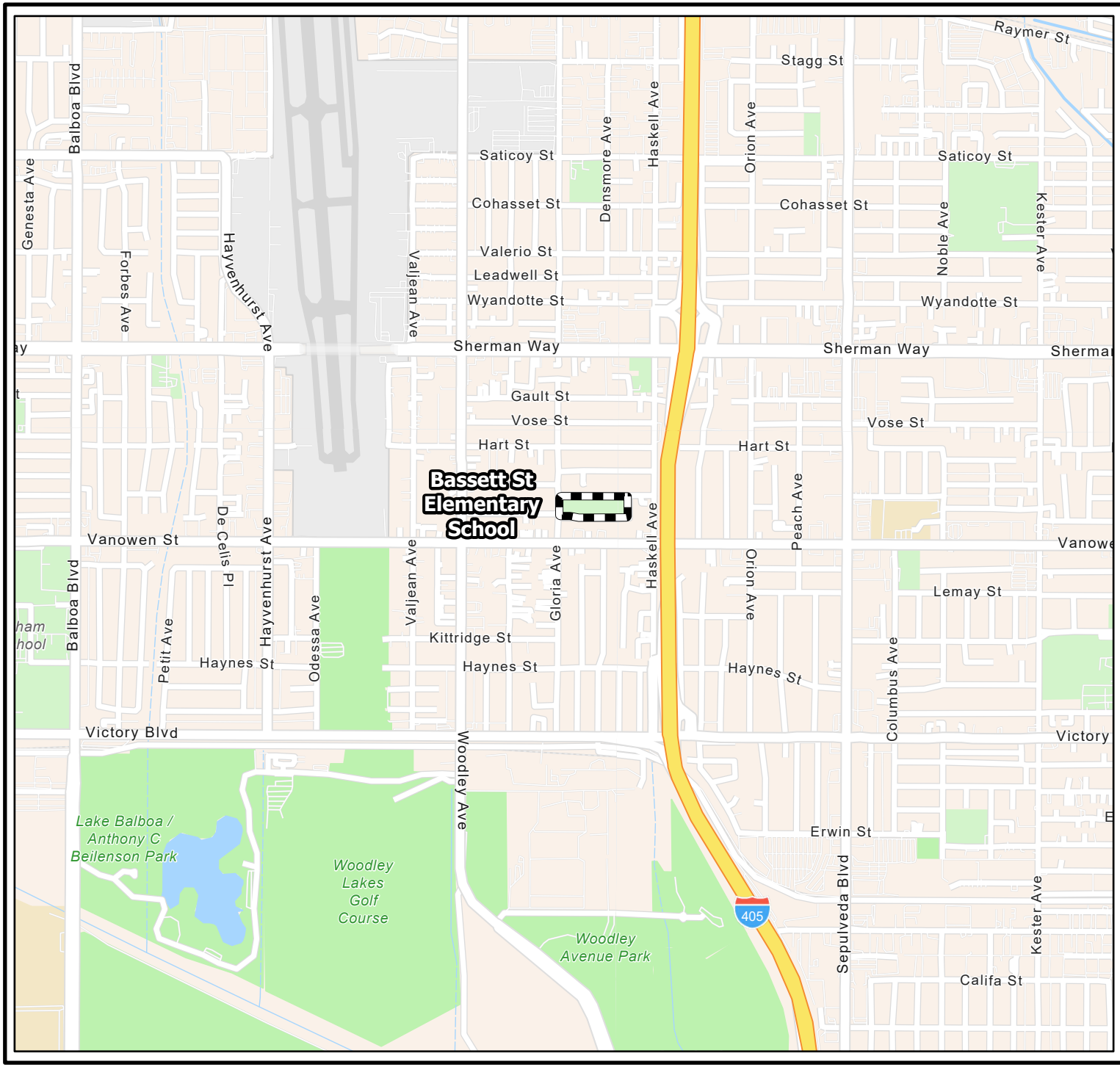

Legend

Bessett St Elementary School Property

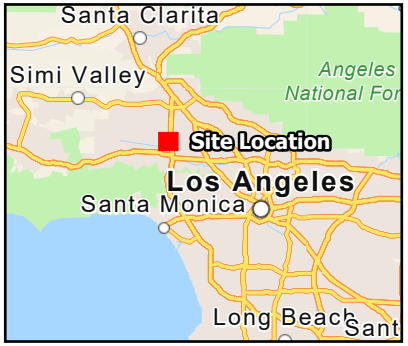

PARSONS

Coordinate System: Image - ESRI Basemaps
NAD 1983 StatePlane California V FIPS 0405 Feet

Feet
1,000 0 1,000 2,000

N

FIGURE 2

BASSETT STREET ELEMENTARY SCHOOL SOIL BORING LOCATIONS

Bassett Street Elementary School
15756 Bassett St,
Van Nuys, CA 91406

Legend

- Soil Boring Location and ID
- Bassett St Elementary School Property

PARSONS

Coordinate System: Image - ESRI Basemaps
NAD 1983 StatePlane California V FIPS 0405 Feet

Feet
50 0 50 100

N

Path: V:\LAUSD\LAUSD_Bassett St\ArcPro\LAUSD_BassettSt\LAUSD_BassettSt.aprx **Layout:** Figure 2 LAUSD_Bassett St ES Soil Borings-Layout **Date Saved:** 1/23/2025 11:07 AM **Date Exported:** 1/22/2025 6:47 PM

APPENDIX A
Private Utility Locate Report

SubSurface Surveys
& Associates, Inc.
An Applied Geophysical Company

2075 Corte Del Nogal, Suite W
Carlsbad, CA 92011

Office: (760) 476-0492
Fax: (760) 476-0493

January 6, 2025

Project/Invoice No. 25-003

Parsons
Hyland, Suite
Costa, California

Attn: **Peter Shair**

Re: Geophysical Investigation Report, LAUSD, Bassett Elementary School, 15756 Bassett Street, Van Nuys, CA

This report is to present the results of our geophysical survey carried out at LAUSD, Bassett Elementary School, 15756 Bassett Street, Van Nuys, CA (Figure 1). The survey was performed on January 3, 2025, and its purpose was to detect and delineate, insofar as possible, all pipes, conduits, utilities, and other underground drilling obstructions in the immediate vicinity of eleven (11) proposed boreholes.

A combination of electromagnetic induction (EM), magnetometry, ground penetrating radar (GPR), and utility locators with line tracing capabilities were brought to the field in anticipation of use.

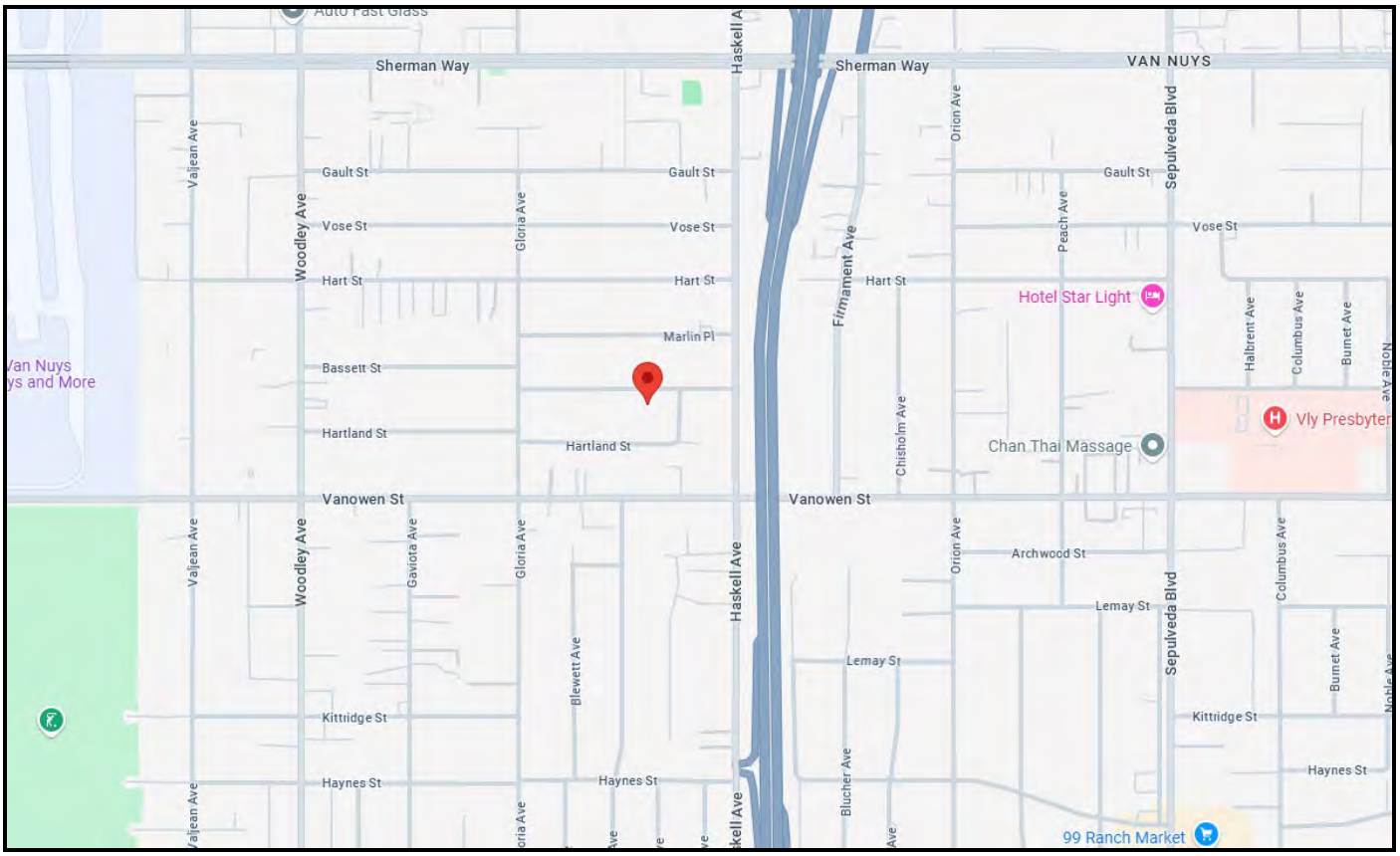

FIGURE 1. Site location map.

Survey Design – The locations of the proposed boreholes were indicated in the field by the client.

For this particular site and for all survey objectives the best use of time was achieved by systematically free-traversing with the instruments while simply monitoring them manually, continuously, and in real-time to determine which responses were significant and due to true subsurface targets, and which were due to other non-target or above-ground features and must be ignored (examples being false GPR anomalies from uneven surfaces). In these situations, the free-traversing method is advantageous in that it allows for relatively quick detection of true anomalous objects which, in turn, facilitates the opportunity to immediately reinvestigate them further for clarification and confirmation. In this manner, the EM device, magnetic gradiometer, and GPR were traversed systematically over and around each borehole in multiple, organized directions. Additional traverses were always taken for detailing and confirmation where anomalous conditions were found.

In addition, the line tracers were used to impress signals onto pipes, generally through accessible risers and tracer wires when present, to delineate the lines' locations and orientations. The instruments were also used in passive mode, configured to detect 60 Hz electrical signals and other common radio-frequency signals found in active electrical and communication lines.

A Fischer TW-6 M-Scope was used for the EM sampling. A Sensors & Software Noggin Ground Penetrating Radar unit with a 500 MHz antenna produced the radar images. The magnetic gradiometer was a Schonstedt GA-52, and a RD 8200 and RIDGID SR-60 SeekTech utility locator rounded out the tools applied.

Brief Description of the Geophysical Methods Applied – The TW-6 M-Scope device energizes the ground by producing an alternating primary magnetic field with AC current in a transmitting coil. If conducting materials are within the area of influence of the primary field, AC eddy currents are induced to flow in the conductors. A receiving coil senses the secondary magnetic field produced by these eddy currents, and outputs the response as anomalous conditions. The strength of the secondary field is a function of the conductivity of the object; say a pipe, tank or cluster of drums, its size, and its depth and position relative to the instrument's two coils. Conductive objects, to a depth of approximately 7 feet below ground surface (bgs) for the M-Scope are sensed. The device is also somewhat focused; that is, it is more sensitive to conductors below the instrument than they are to conductors off to the side.

The magnetic gradiometer has two flux gate magnetic fixed sensors that are passed closely to and over the ground. When not in close proximity to a magnetic object, that is, only in the earth's field, the instrument emits a sound signal at a low frequency. When the instrument passes over a buried iron or steel object, so that locally there is a high magnetic gradient, the frequency of the emitted sound increases. The frequency is a function of the gradient between the two sensors.

The GPR instrument beams energy into the ground from its transducer/antenna, in the form of electromagnetic waves. A portion of this energy is reflected back to the antenna at a boundary in the subsurface across which there is an electrical contrast. The instrument produces a continuous record of the reflected energy as the antenna is traversed across the ground surface. The greater the electrical contrast, the higher the amplitude of the returned energy. The radar wave travels at a velocity unique to the material properties of the ground being investigated, and when these velocities are known, the two-way travel times can be converted to depth. The depth of penetration and image resolution produced are a function of ground electrical conductivity and dielectric constant.

The line locator is used to passively detect energized high voltage electric lines and electrical conduit (50-60 Hz), VLF signals (14-22 kHz), as well as to actively trace other utilities. Where risers are present, the utility locator transmitter can be connected directly to the object, and a signal (9.8-82 kHz) is sent traveling along the conductor, pipe, conduit, etc. In the absence of a riser, the transmitter can be used to impress an input signal on the utility by induction. In either case, the receiver unit is tuned to the input signal, and is used to actively trace the signal along the pipe's surface projection.

Interpretation and Conclusions – The interpretation took place in real time as the survey progressed, and accordingly, the findings of our investigation were marked on the ground cover at the site with spray paint, were reported directly to the client's representative, and are further documented with site photographs of the borehole locations (Figures 2-12). Note that the borehole locations in each photograph are labeled according to Parson's numbering scheme and are presented in alphanumeric order.

Items detected within the survey areas were marked in coordinated standard colors including red for electric, green for sewer or storm drain, blue for water, and white for utilities of unknown type. At the conclusion of the survey, the boreholes were positioned in order to provide adequate clearance from detected obstructions. In their final locations, they were marked in white with a yellow "SSS", to indicate that they had been checked by company personnel.

General Limitations, Cautions, and Further Recommendations - It should be understood that nearly all work sites possess conditions or configurations limiting the effectiveness of both geophysical instruments and the surveying techniques in which they are deployed. Additionally, when such is not performing optimally it can often times occur unknowing to the instrument operator. Consequently, the detection of buried objects in all circumstances **cannot be guaranteed**. Such geophysical limitations are numerous and difficult to predict beforehand, but may include such things as rebar-reinforced ground cover or aboveground metallic structures interfering with metal detection, abrupt changes in ground cover type disrupting radar signal, aboveground obstacles preventing full instrument traverses or restricting traverses to one direction only, nearby powerlines or EM transmitters interfering with instrument electronics, highly conductive background soil conditions limiting GPR penetration, non-metallic targets with geo-electrical properties similar to soil, nearby buried objects shielding true targets from detection, tracing signal jumping from the target pipe to nearby non-target conduits, and inaccessible risers, cleanouts, valve boxes, and manholes. If one or more geophysical instrument is rendered ineffective and cannot be utilized, the quality of the survey can be somewhat degraded.

For the above reasons, and in the interest of maximum safety, we encourage our clients to take advantage of Underground Service Alert (USA), Dig Alert, or other similar services, when possible. Furthermore, we recommend hand-auguring and the use of a drilling method known as air knifing or vacuum extraction, when feasible or if applicable to this project. These methods may significantly limit damage to underground pipes, conduits, and utilities that might not have been detectable during this survey. Please bear in mind, that geophysical surveying is only one of several levels of protection that is available to our clients.

SubSurface Surveys may include maps in some reports. While they are an accurate general representation of the site and our findings, they are not of engineering quality (i.e., measured and mapped by a licensed land surveyor).

SubSurface Surveys and Associates makes no guarantee either expressed or implied regarding the accuracy

of the findings and interpretations present. And, in no event will SubSurface Surveys and Associates be liable for any direct, indirect, special, incidental, or consequential damages resulting from interpretations and opinions presented herewith.

All data generated on this project are in confidential file in this office and are available for review by authorized persons at any time. The opportunity to participate in this investigation is very much appreciated. Please call, if there are questions.

William Donnelly
Staff Geophysicist, SubSurface Surveys

Travis Crosby
Senior Geophysicist, SubSurface Surveys
CA State Geophysics Registration GP1044

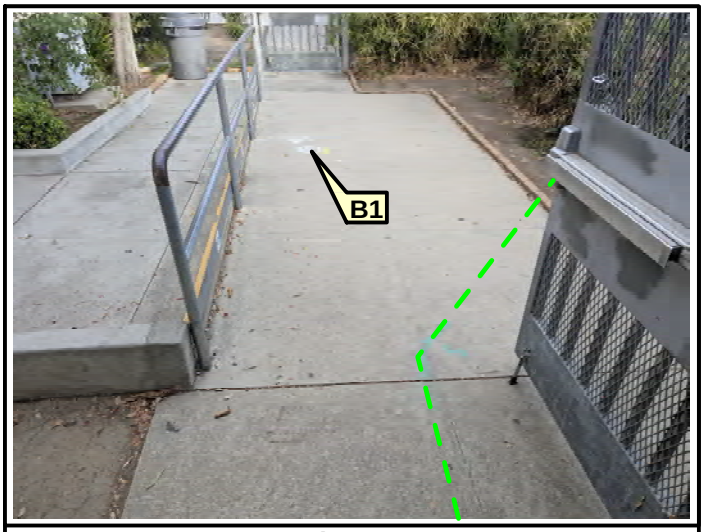

Figure 2

Figure 3

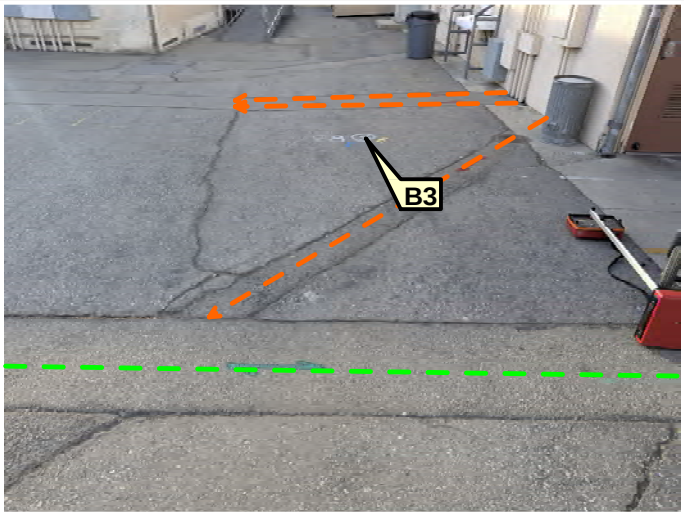

Figure 4

Figure 5

Figure 6

Figure 7

Sub Surface Surveys	SITE: **LAUSD** **Bassett Elementary School** **15756 Bassett Street** **Van Nuys, CA**	TITLE: **Borehole Photographs** PREPARED FOR: **Parsons**	SURVEY DATE: **January 3, 2025** SSS PROJECT NO: **25-003**

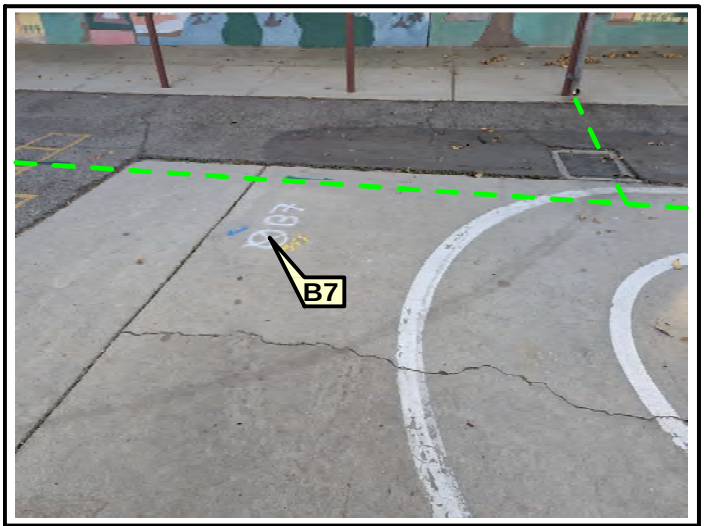

Figure 8

Figure 9

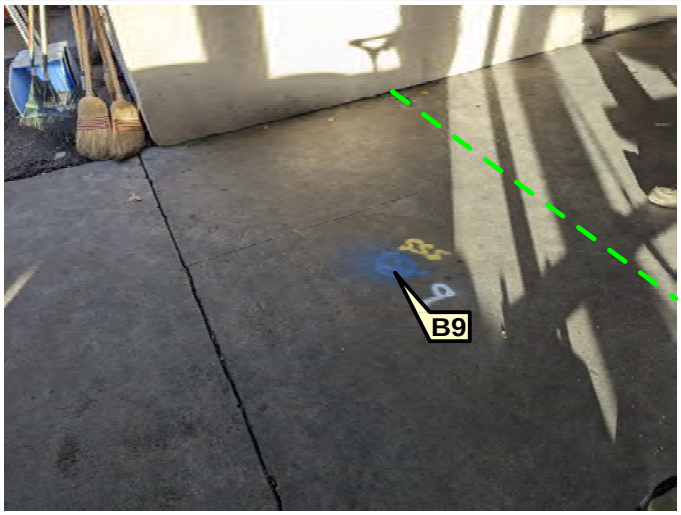

Figure 10

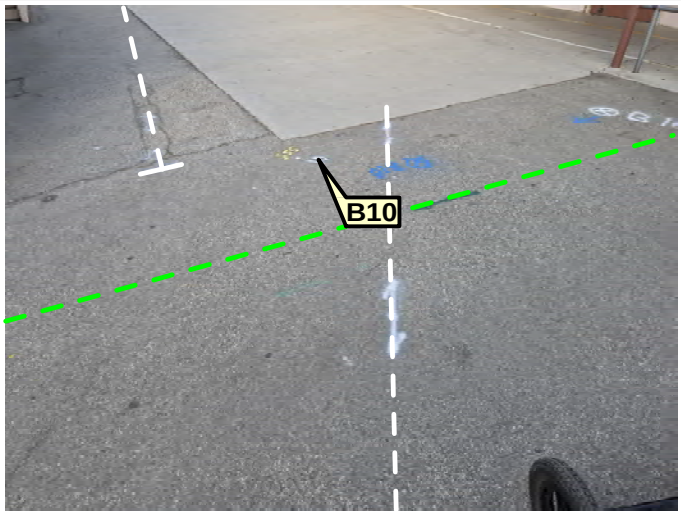

Figure 11

Figure 12

No Photo

Sub Surface Surveys	SITE: **LAUSD** **Bassett Elementary School** **15756 Bassett Street** **Van Nuys, CA**	TITLE: **Borehole Photographs** PREPARED FOR: **Parsons**	SURVEY DATE: **January 3, 2025** SSS PROJECT NO: **25-003**

APPENDIX B
Boring Logs

Parsons

Field Boring Log

Location of Boring/Well: Bassett Street Elementary School

See Boring Location Map

Datum:

Job No. 454129

Client/Site: LAUSD Bassett Street ES

Drilling Co./Method: Rice General

Sampling Method: Hand Auger

Weather Conditions: Sunny

Surface Conditions: Concrete

Boring/Well Number: **SB-1**

Sheet 1 of 1

Drilling Start Date: 1/3/2025 Time: 1120

Drilling Finish Date: 1/3/2025 Time: 1132

Geologist: Alex Gonzalez

Reviewed By: Peter Shair, PG

Type of Instrument/Serial No.: Iso 100 PPM

Calibration Date/Gas:

Sample Container:

Sample Analyses:

Personal Sampling: [X] No [ ] Yes

Person Sampled:

Sample No. / Sample Depth	Time	Sampler Blows	Inches Driven / % Recovery	PID (ppm) Auger	PID (ppm) Sample	XRF Lead (ppm)	Depth in Feet	USCS Soil Type	Notes:
							0		
									Concrete to 4.5"
	1128							SW	Sand with trace silt, dry, loose, light brown
							0.5		
							1		
	1130							SW	Same as above
							1.5		TD = 1.5'
									Samples collected 0.0' - 0.5'
									below bottom of pavement and 1.0' - 1.5' bgs
							2		
							2.5		
							3		
							3.5		
							4		
							4.5		
							5		

Parsons

Field Boring Log

Location of Boring/Well: Bassett Street Elementary School

See Boring Location Map

Datum:

Job No. 454129

Client/Site: LAUSD Bassett Street ES

Drilling Co./Method: Rice General

Sampling Method: Hand Auger

Weather Conditions: Sunny

Surface Conditions: Concrete

Boring/Well Number: SB-2

Sheet 1 of 1

Drilling Start Date	Drilling Finish Date
1/3/2025	1/3/2025
Time	Time
1100	1108

Geologist: Alex Gonzalez

Reviewed By: Peter Shair, PG

Type of Instrument/Serial No.: Iso 100 PPM

Calibration Date/Gas:

Sample Container:

Sample Analyses:

Personal Sampling: [X] No [ ] Yes

Person Sampled:

Sample No. / Sample Depth	Time	Sampler Blows	Inches Driven / % Recovery	PID (ppm) Auger	PID (ppm) Sample	XRF Lead (ppm)	Depth in Feet	USCS Soil Type	Notes:
							0		
									Concrete to 5"
	1106							SW	Sand with trace silt, dry, loose, dark brown
							0.5		
							1		
	1108							SW	Same as above, lighter brown than above
							1.5		TD = 1.5'
									Samples collected 0.0' - 0.5'
									below bottom of pavement and 1.0' - 1.5' bgs
							2		
							2.5		
							3		
							3.5		
							4		
							4.5		
							5		

Parsons

Field Boring Log

Location of Boring/Well: Bassett Street Elementary School

See Boring Location Map

Datum:

Job No. 454129

Client/Site: LAUSD Bassett Street ES

Drilling Co./Method: Rice General

Sampling Method: Hand Auger

Weather Conditions: Cloudy

Surface Conditions: Asphalt

Boring/Well Number: SB-3

Sheet 1 of 1

Drilling Start Date	Drilling Finish Date
1/3/2025	1/3/2025
Time	Time
1035	1045

Geologist: Alex Gonzalez

Reviewed By: Peter Shair, PG

Type of Instrument/Serial No.: Iso 100 PPM

Calibration Date/Gas:

Sample Container:

Sample Analyses:

Personal Sampling: [X] No [ ] Yes

Person Sampled:

Sample No. / Sample Depth	Time	Sampler Blows	Inches Driven / % Recovery	PID (ppm) Auger	PID (ppm) Sample	XRF Lead (ppm)	Depth in Feet	USCS Soil Type	Notes:
							0		
									Asphalt to 3.75", Gravel to 4"
	1040								Sand with silt, fine to medium, dry, dense,
								SW-SM	dark brown
							0.5		
							1		
	1045								Sand with silt, fine to medium , moist, dense,
								SW-SM	brown
							1.5		TD = 1.5'
									Samples collected 0.0' - 0.5'
									below bottom of pavement and 1.0' - 1.5' bgs
							2		
							2.5		
							3		
							3.5		
							4		
							4.5		
							5		

Parsons

Field Boring Log

Location of Boring/Well: Bassett Street Elementary School

See Boring Location Map

Datum:

Job No. 454129

Client/Site: LAUSD Bassett Street ES

Drilling Co./Method: Rice General

Sampling Method: Hand Auger

Weather Conditions: Cloudy

Surface Conditions: Concrete

Boring/Well Number: SB-4

Sheet 1 of 1

Drilling Start Date	Drilling Finish Date
1/3/2025	1/3/2025
Time	Time
1015	1020

Geologist: Alex Gonzalez

Reviewed By: Peter Shair, PG

Type of Instrument/Serial No.: Iso 100 PPM

Calibration Date/Gas:

Sample Container:

Sample Analyses:

Personal Sampling: [ ] Yes [X] No

Person Sampled:

Sample No. / Sample Depth	Time	Sampler Blows	Inches Driven / % Recovery	PID (ppm) Auger	PID (ppm) Sample	XRF Lead (ppm)	Depth in Feet	USCS Soil Type	Notes:
							0		
									Concrete to 7"
	1017						0.5		
								SW	Sand with trace silt, loose, dry, light brown
							1		
	1019							SM	Silty sand, fine to medium, dense, dry, brown
							1.5		TD = 1.5'
									Samples collected 0.0' - 0.5'
									below bottom of pavement and 1.0' - 1.5' bgs
							2		
							2.5		
							3		
							3.5		
							4		
							4.5		
							5		

Parsons

Field Boring Log

Location of Boring/Well: Bassett Street Elementary School

See Boring Location Map

Datum:

Job No. 454129

Client/Site: LAUSD Bassett Street ES

Drilling Co./Method: Rice General

Sampling Method: Hand Auger

Weather Conditions: Sunny

Surface Conditions: Concrete

Boring/Well Number: **SB-5**

Sheet 1 of 1

Drilling Start Date: 1/3/2025 Time: 0915

Drilling Finish Date: 1/3/2025 Time: 0918

Geologist: Alex Gonzalez

Reviewed By: Peter Shair, PG

Iso 100 PPM

Calibration Date/Gas:

Type of Instrument/Serial No.

Sample Container:

Sample Analyses:

Personal Sampling: [ ] Yes [X] No

Person Sampled:

Sample No. / Sample Depth	Time	Sampler Blows	Inches Driven / % Recovery	PID (ppm) Auger	PID (ppm) Sample	XRF Lead (ppm)	Depth in Feet	USCS Soil Type	Notes:
							0		
									Concrete to 6.5"
	0916						0.5	SM	Silty sand, fine to medium, dry, dense, dark brown
							1		
	0918								
								SM	Same as above
							1.5		TD = 1.5'
									Samples collected 0.0' - 0.5'
									below bottom of pavement and 1.0' - 1.5' bgs
							2		
							2.5		
							3		
							3.5		
							4		
							4.5		
							5		

Parsons

Field Boring Log

Location of Boring/Well: Bassett Street Elementary School

See Boring Location Map

Datum:

Job No. 454129

Client/Site: LAUSD Bassett Street ES

Drilling Co./Method: Rice General

Sampling Method: Hand Auger

Weather Conditions: Cloudy

Surface Conditions: Concrete

Boring/Well Number: **SB-6**

Sheet 1 of 1

Drilling	Start	Finish
Date	1/3/2025	1/3/2025
Time	0919	0923

Geologist: Alex Gonzalez

Reviewed By: Peter Shair, PG

Type of Instrument/Serial No.: Iso 100 PPM

Calibration Date/Gas:

Sample Container:

Sample Analyses:

Personal Sampling: [ ] Yes [X] No

Person Sampled:

Sample No. / Sample Depth	Time	Sampler Blows	Inches Driven / % Recovery	PID (ppm) Auger	PID (ppm) Sample	XRF Lead (ppm)	Depth in Feet	USCS Soil Type	Notes:
							0		
									Concrete to 5"
	0920								
									Sand with trace silt, fine to medium, dry, dense,
							0.5	SW	brown
							1		
	0922							SW	Same as above, lighter brown than above
							1.5		TD = 1.5'
									Samples collected 0.0' - 0.5'
									below bottom of pavement and 1.0' - 1.5' bgs
							2		
							2.5		
							3		
							3.5		
							4		
							4.5		
							5		

Parsons

Field Boring Log

Location of Boring/Well: Bassett Street Elementary School

See Boring Location Map

Datum:

Job No. 454129

Client/Site: LAUSD Bassett Street ES

Drilling Co./Method: Rice General

Sampling Method: Hand Auger

Weather Conditions: Cloudy

Surface Conditions: Concrete

Boring/Well Number: SB-7

Sheet 1 of 1

Drilling Start Date: 1/3/2025 Time: 0954

Drilling Finish Date: 1/3/2025 Time: 0959

Geologist: Alex Gonzalez

Reviewed By: Peter Shair, PG

Type of Instrument/Serial No.: Iso 100 PPM

Calibration Date/Gas:

Sample Container:

Sample Analyses:

Personal Sampling: [ ] Yes [X] No

Person Sampled:

Sample No. / Sample Depth	Time	Sampler Blows	Inches Driven / % Recovery	PID (ppm) Auger	PID (ppm) Sample	XRF Lead (ppm)	Depth in Feet	USCS Soil Type	Notes:
							0		
									Concrete to 4.5"
	0955								
									Silty sand, fine to medium, dry, dense,
							0.5	SM	dark brown
							1		
	0957								
								SM	Same as above, darker brown than above
							1.5		TD = 1.5'
									Samples collected 0.0' - 0.5'
									below bottom of pavement and 1.0' - 1.5' bgs
							2		
							2.5		
							3		
							3.5		
							4		
							4.5		
							5		

Start Date	Start Time	Finish Date	Finish Time
1/3/2025	0954	1/3/2025	0959

Parsons

Field Boring Log

Location of Boring/Well: Bassett Street Elementary School

See Boring Location Map

Datum:

Job No. 454129

Client/Site: LAUSD Bassett Street ES

Drilling Co./Method: Rice General

Sampling Method: Hand Auger

Weather Conditions: Sunny

Surface Conditions: Asphalt

Boring/Well Number: SB-8

Sheet 1 of 1

Drilling Start Date: 1/3/2025 Time: 0747

Drilling Finish Date: 1/3/2025 Time: 0803

Geologist: Alex Gonzalez

Reviewed By: Peter Shair, PG

Type of Instrument/Serial No.: Iso 100 PPM

Calibration Date/Gas:

Sample Container:

Sample Analyses:

Personal Sampling: [ ] Yes [X] No

Person Sampled:

Sample No. / Sample Depth	Time	Sampler Blows	Inches Driven / % Recovery	PID (ppm) Auger	PID (ppm) Sample	XRF Lead (ppm)	Depth in Feet	USCS Soil Type	Notes:
							0		
									Asphalt to 3", Gravel to 5"
	0800								
									Silty sand, fine to medium, moist, dense,
							0.5	SM	dark brown
							1		
	0803								Sand with silt, fine to medium, moist, loose,
								SW-SM	light brown
							1.5		TD = 1.5'
									Samples collected 0.0' - 0.5'
									below bottom of pavement and 1.0' - 1.5' bgs
							2		
							2.5		
							3		
							3.5		
							4		
							4.5		
							5		

Parsons

Field Boring Log

Location of Boring/Well: Bassett Street Elementary School

See Boring Location Map

Datum:

Job No. 454129

Client/Site: LAUSD Bassett Street ES

Drilling Co./Method: Rice General

Sampling Method: Hand Auger

Weather Conditions: Sunny

Surface Conditions: Concrete

Boring/Well Number: SB-9

Sheet 1 of 1

Drilling Start Date	Drilling Finish Date
1/3/2025	1/3/2025
Time	Time
0811	0835

Geologist: Alex Gonzalez

Reviewed By: Peter Shair, PG

Type of Instrument/Serial No.: Iso 100 PPM

Calibration Date/Gas:

Sample Container:

Sample Analyses:

Personal Sampling: [ ] Yes [X] No

Person Sampled:

Sample No. / Sample Depth	Time	Sampler Blows	Inches Driven / % Recovery	PID (ppm) Auger	PID (ppm) Sample	XRF Lead (ppm)	Depth in Feet	USCS Soil Type	Notes:
							0		
									Concrete to 4"
	0830								Sand with trace silt, fine to medium, dry, dense,
								SW	light brown
							0.5		
							1		
	0835								
								SM	Silty sand, fine to medium, dry, dense, dark brown
							1.5		TD = 1.5'
									Samples collected 0.0' - 0.5'
									below bottom of pavement and 1.0' - 1.5' bgs
							2		
							2.5		
							3		
							3.5		
							4		
							4.5		
							5		

Parsons

Field Boring Log

Location of Boring/Well: Bassett Street Elementary School

See Boring Location Map

Datum:

Job No. 454129

Client/Site: LAUSD Bassett Street ES

Drilling Co./Method: Rice General

Sampling Method: Hand Auger

Weather Conditions: Sunny

Surface Conditions: Asphalt

Boring/Well Number: **SB-10**

Sheet 1 of 1

Drilling Start Date: 1/3/2025 Time: 0910

Drilling Finish Date: 1/3/2025 Time: 0915

Geologist: Alex Gonzalez

Reviewed By: Peter Shair, PG

Iso 100 PPM

Calibration Date/Gas:

Type of Instrument/Serial No.

Sample Container:

Sample Analyses:

Personal Sampling: [ ] Yes [X] No

Person Sampled:

Sample No. / Sample Depth	Time	Sampler Blows	Inches Driven / % Recovery	PID (ppm) Auger	PID (ppm) Sample	XRF Lead (ppm)	Depth in Feet	USCS Soil Type	Notes:
							0		
									Asphalt to 4", Base to 6"
	0912						0.5		Sand,well graded, fine to medium, dry, loose,
								SW	light brown
							1		
	0914								
								SW	Same as above
							1.5		TD = 1.5'
									Samples collected 0.0' - 0.5'
									below bottom of pavement and 1.0' - 1.5' bgs
							2		
							2.5		
							3		
							3.5		
							4		
							4.5		
							5		

Parsons

Field Boring Log

Location of Boring/Well: Bassett Street Elementary School

See Boring Location Map

Datum:

Job No. 454129

Client/Site: LAUSD Bassett Street ES

Drilling Co./Method: Rice General

Sampling Method: Hand Auger

Weather Conditions: Sunny

Surface Conditions: Asphalt

Boring/Well Number: **SB-11**

Sheet 1 of 1

Drilling Start Date: 1/3/2025 Time: 1150

Drilling Finish Date: 1/3/2025 Time: 1205

Geologist: Alex Gonzalez

Reviewed By: Peter Shair, PG

Type of Instrument/Serial No.: Iso 100 PPM

Calibration Date/Gas:

Sample Container:

Sample Analyses:

Personal Sampling: [ ] Yes [X] No

Person Sampled:

Sample No. / Sample Depth	Time	Sampler Blows	Inches Driven / % Recovery	PID (ppm) Auger	PID (ppm) Sample	XRF Lead (ppm)	Depth in Feet	USCS Soil Type	Notes:
							0		
									Asphalt to 4", Base to 6"
	1155						0.5		Sand with trace silt, fine to medium, dry, loose,
								SW	dark brown
							1		
	1157								
								SW	Same as above
							1.5		TD = 1.5'
									Samples collected 0.0' - 0.5'
									below bottom of pavement and 1.0' - 1.5' bgs
							2		
							2.5		
							3		
							3.5		
							4		
							4.5		
							5		

APPENDIX C
Certified Analytical Laboratory Report

Orange Coast Analytical, Inc.
3002 Dow, Suite 532, Tustin, CA 92780 (714) 832-0064 Fax (714) 832-0067
4620 E. Elwood, Suite 4, Phoenix, AZ 85040 (480) 736-0960 Fax (480) 736-0970

LABORATORY REPORT FORM

ORANGE COAST ANALYTICAL, INC.

3002 Dow Suite 532 Tustin, CA 92780

(714) 832-0064

Laboratory Certification (ELAP) No.:2576
Expiration Date: 2025
Los Angeles County Sanitation District Lab ID# 10206

Laboratory Director's Name:
Chris Tisserat

Client:	Parsons Environment & Infrastructure, Inc.
Laboratory Reference:	PEI OCAQ1021
Project Name:	LAUSD Basset Street
Project Number:	
Date Received:	1/6/2025
Date Reported:	1/20/2025
Chain of Custody Received:	☑
Analytical Method:	8081A, 8082, 8270C, 6010B, 7471A, 6020,

Chris Tisserat, Laboratory Director

© This report may only be reproduced in full. Any partial reproduction of this report requires written permission from Orange Coast Analytical, Inc. Rev1.0

Mr. Justin King
Parsons Environment & Infrastructure, Inc.
100 W. Walnut St
Pasadena, CA, 91124

Lab Reference # PEI OCAQ1021
Project Name: LAUSD Basset Street
Project #:

Case Narrative

Sample Receipt:

All samples on the Chain of Custody were received by OCA at ºC, on ice.

cooler 1= 0°C
cooler 2 =1°C
cooler 3 = 4°C
IR#2

Holding Times:

All samples were analyzed within required holding times unless otherwise noted in the data qualifier section of the report.

Analytical Methods:

Sample analysis was performed following the analytical methods listed on the cover page.

Data Qualifiers:

Within this report, data qualifiers may have been assigned to clarify deviations in common laboratory procedures or any divergence from laboratory QA/QC criteria. If a data qualifier has been used, it will appear in the back of the report along with its description. All method QA/QC criteria have been met unless otherwise noted in the data qualifier section.

Definition of Terms:

The definitions of common terms and acronyms used in the report have been placed at the back of the report to assist data users.

Comments:

None

Mr. Justin King
Parsons Environment & Infrastructure, Inc.
100 W. Walnut St
Pasadena, CA, 91124

Lab Reference # PEI OCAQ1021
Project Name: LAUSD Basset Street
Project #:

Client Sample Summary

Client Sample ID	Lab Sample Number	Date Received	Date Sampled	Matrix
SB-1-0.0	OCAQ1021-01	1/6/2025	1/3/2025	Soil
SB-1-1.0	OCAQ1021-02	1/6/2025	1/3/2025	Soil
SB-2-0.0	OCAQ1021-03	1/6/2025	1/3/2025	Soil
SB-2-1.0	OCAQ1021-04	1/6/2025	1/3/2025	Soil
SB-3-0.0	OCAQ1021-05	1/6/2025	1/3/2025	Soil
SB-3-1.0	OCAQ1021-06	1/6/2025	1/3/2025	Soil
SB-3-1.0D	OCAQ1021-07	1/6/2025	1/3/2025	Soil
SB-4-0.0	OCAQ1021-08	1/6/2025	1/3/2025	Soil
SB-4-1.0	OCAQ1021-09	1/6/2025	1/3/2025	Soil
SB-5-0.0	OCAQ1021-10	1/6/2025	1/3/2025	Soil
SB-5-1.0	OCAQ1021-11	1/6/2025	1/3/2025	Soil
SB-6-0.0	OCAQ1021-12	1/6/2025	1/3/2025	Soil
SB-6-1.0	OCAQ1021-13	1/6/2025	1/3/2025	Soil
SB-7-0.0	OCAQ1021-14	1/6/2025	1/3/2025	Soil
SB-7-1.0	OCAQ1021-15	1/6/2025	1/3/2025	Soil
SB-8-0.0	OCAQ1021-16	1/6/2025	1/3/2025	Soil
SB-8-1.0	OCAQ1021-17	1/6/2025	1/3/2025	Soil
SB-9-0.0	OCAQ1021-18	1/6/2025	1/3/2025	Soil
SB-9-1.0	OCAQ1021-19	1/6/2025	1/3/2025	Soil
SB-9-0.0D	OCAQ1021-20	1/6/2025	1/3/2025	Soil
SB-10-0.0	OCAQ1021-21	1/6/2025	1/3/2025	Soil
SB-10-1.0	OCAQ1021-22	1/6/2025	1/3/2025	Soil
SB-11-0.0	OCAQ1021-23	1/6/2025	1/3/2025	Soil
SB-11-1.0	OCAQ1021-24	1/6/2025	1/3/2025	Soil

Mr. Justin King
Parsons Environment & Infrastructure, Inc.
100 W. Walnut St
Pasadena, CA, 91124

Lab Reference # PEI OCAQ1021
Project Name: LAUSD Basset Street
Project #:

Organochlorine Pesticides (EPA 8081A)

Client Sample ID	Lab Sample Number	Date Received	Date Sampled	Date Extracted	Date Analyzed	Matrix
Method Blank	MBVV0107251			1/7/2025 15:44	1/10/2025 12:09	Soil

ANALYTE	CAS #	µg/kg	RL
Aldrin	309-00-2	<2.0	2.0
alpha-BHC	319-84-6	<5.0	5.0
beta-BHC	319-85-7	<5.0	5.0
gamma-BHC (Lindane)	58-89-9	<5.0	5.0
delta-BHC	319-86-8	<10	10
Chlordane	57-74-9	<30	30
4,4'-DDD	72-54-8	<10	10
4,4'-DDE	72-55-9	<5.0	5.0
4,4'-DDT	50-29-3	<10	10
Dieldrin	60-57-1	<2.0	2.0
Endosulfan I	959-98-8	<10	10
Endosulfan II	33213-65-9	<5.0	5.0
Endosulfan sulfate	1031-07-8	<10	10
Endrin	72-20-8	<10	10
Endrin aldehyde	7421-93-4	<10	10
Endrin ketone	53494-70-5	<5.0	5.0
Heptachlor	76-44-8	<2.0	2.0
Heptachlor epoxide	1024-57-3	<5.0	5.0
Methoxychlor	72-43-5	<10	10
Toxaphene	8001-35-2	<40	40

Surrogate:	% RC*
Decachlorobiphenyl	77

* Acceptable Recovery: 33-139 %

Dilution Factor: 1

Data Qualifiers: None

Mr. Justin King
Parsons Environment & Infrastructure, Inc.
100 W. Walnut St
Pasadena, CA, 91124

Lab Reference # PEI OCAQ1021
Project Name: LAUSD Basset Street
Project #:

Organochlorine Pesticides (EPA 8081A)

Client Sample ID	Lab Sample Number	Date Received	Date Sampled	Date Extracted	Date Analyzed	Matrix
SB-1-0.0	OCAQ1021-01	1/6/2025 11:00	1/3/2025	1/7/2025 15:44	1/10/2025 13:21	Soil

ANALYTE	CAS #	µg/kg	RL
Aldrin	309-00-2	<2.0	2.0
alpha-BHC	319-84-6	<5.0	5.0
beta-BHC	319-85-7	<5.0	5.0
gamma-BHC (Lindane)	58-89-9	<5.0	5.0
delta-BHC	319-86-8	<10	10
Chlordane	57-74-9	<30	30
4,4'-DDD	72-54-8	<10	10
4,4'-DDE	72-55-9	<5.0	5.0
4,4'-DDT	50-29-3	<10	10
Dieldrin	60-57-1	<2.0	2.0
Endosulfan I	959-98-8	<10	10
Endosulfan II	33213-65-9	<5.0	5.0
Endosulfan sulfate	1031-07-8	<10	10
Endrin	72-20-8	<10	10
Endrin aldehyde	7421-93-4	<10	10
Endrin ketone	53494-70-5	<5.0	5.0
Heptachlor	76-44-8	<2.0	2.0
Heptachlor epoxide	1024-57-3	<5.0	5.0
Methoxychlor	72-43-5	<10	10
Toxaphene	8001-35-2	<40	40

Surrogate:	% RC*
Decachlorobiphenyl	72

* Acceptable Recovery: 33-139 %

Dilution Factor: 1

Data Qualifiers: None

Mr. Justin King
Parsons Environment & Infrastructure, Inc.
100 W. Walnut St
Pasadena, CA, 91124

Lab Reference # PEI OCAQ1021
Project Name: LAUSD Basset Street
Project #:

Organochlorine Pesticides (EPA 8081A)

Client Sample ID	Lab Sample Number	Date Received	Date Sampled	Date Extracted	Date Analyzed	Matrix
SB-2-0.0	OCAQ1021-03	1/6/2025 11:00	1/3/2025	1/7/2025 15:44	1/10/2025 13:51	Soil

ANALYTE	CAS #	µg/kg	RL
Aldrin	309-00-2	<2.0	2.0
alpha-BHC	319-84-6	<5.0	5.0
beta-BHC	319-85-7	<5.0	5.0
gamma-BHC (Lindane)	58-89-9	<5.0	5.0
delta-BHC	319-86-8	<10	10
Chlordane	57-74-9	<30	30
4,4'-DDD	72-54-8	<10	10
4,4'-DDE	72-55-9	<5.0	5.0
4,4'-DDT	50-29-3	<10	10
Dieldrin	60-57-1	<2.0	2.0
Endosulfan I	959-98-8	<10	10
Endosulfan II	33213-65-9	<5.0	5.0
Endosulfan sulfate	1031-07-8	<10	10
Endrin	72-20-8	<10	10
Endrin aldehyde	7421-93-4	<10	10
Endrin ketone	53494-70-5	<5.0	5.0
Heptachlor	76-44-8	<2.0	2.0
Heptachlor epoxide	1024-57-3	<5.0	5.0
Methoxychlor	72-43-5	<10	10
Toxaphene	8001-35-2	<40	40

Surrogate:	% RC*
Decachlorobiphenyl	70

* Acceptable Recovery: 33-139 %

Dilution Factor: 1

Data Qualifiers: None

Mr. Justin King
Parsons Environment & Infrastructure, Inc.
100 W. Walnut St
Pasadena, CA, 91124

Lab Reference # PEI OCAQ1021
Project Name: LAUSD Basset Street
Project #:

Organochlorine Pesticides (EPA 8081A)

Client Sample ID	Lab Sample Number	Date Received	Date Sampled	Date Extracted	Date Analyzed	Matrix
SB-3-0.0	OCAQ1021-05	1/6/2025 11:00	1/3/2025	1/7/2025 15:44	1/10/2025 14:05	Soil

ANALYTE	CAS #	µg/kg	RL
Aldrin	309-00-2	<2.0	2.0
alpha-BHC	319-84-6	<5.0	5.0
beta-BHC	319-85-7	<5.0	5.0
gamma-BHC (Lindane)	58-89-9	<5.0	5.0
delta-BHC	319-86-8	<10	10
Chlordane	57-74-9	<30	30
4,4'-DDD	72-54-8	<10	10
4,4'-DDE	72-55-9	<5.0	5.0
4,4'-DDT	50-29-3	<10	10
Dieldrin	60-57-1	<2.0	2.0
Endosulfan I	959-98-8	<10	10
Endosulfan II	33213-65-9	<5.0	5.0
Endosulfan sulfate	1031-07-8	<10	10
Endrin	72-20-8	<10	10
Endrin aldehyde	7421-93-4	<10	10
Endrin ketone	53494-70-5	<5.0	5.0
Heptachlor	76-44-8	<2.0	2.0
Heptachlor epoxide	1024-57-3	<5.0	5.0
Methoxychlor	72-43-5	<10	10
Toxaphene	8001-35-2	<40	40

Surrogate:	% RC*
Decachlorobiphenyl	72

* Acceptable Recovery: 33-139 %

Dilution Factor: 1

Data Qualifiers: None

Mr. Justin King
Parsons Environment & Infrastructure, Inc.
100 W. Walnut St
Pasadena, CA, 91124

Lab Reference # PEI OCAQ1021
Project Name: LAUSD Basset Street
Project #:

Organochlorine Pesticides (EPA 8081A)

Client Sample ID	Lab Sample Number	Date Received	Date Sampled	Date Extracted	Date Analyzed	Matrix
SB-3-1.0D	OCAQ1021-07	1/6/2025 11:00	1/3/2025	1/7/2025 15:44	1/10/2025 14:20	Soil

ANALYTE	CAS #	µg/kg	RL
Aldrin	309-00-2	<2.0	2.0
alpha-BHC	319-84-6	<5.0	5.0
beta-BHC	319-85-7	<5.0	5.0
gamma-BHC (Lindane)	58-89-9	<5.0	5.0
delta-BHC	319-86-8	<10	10
Chlordane	57-74-9	<30	30
4,4'-DDD	72-54-8	<10	10
4,4'-DDE	72-55-9	<5.0	5.0
4,4'-DDT	50-29-3	<10	10
Dieldrin	60-57-1	<2.0	2.0
Endosulfan I	959-98-8	<10	10
Endosulfan II	33213-65-9	<5.0	5.0
Endosulfan sulfate	1031-07-8	<10	10
Endrin	72-20-8	<10	10
Endrin aldehyde	7421-93-4	<10	10
Endrin ketone	53494-70-5	<5.0	5.0
Heptachlor	76-44-8	<2.0	2.0
Heptachlor epoxide	1024-57-3	<5.0	5.0
Methoxychlor	72-43-5	<10	10
Toxaphene	8001-35-2	<40	40

Surrogate:	% RC*
Decachlorobiphenyl	70

* Acceptable Recovery: 33-139 %

Dilution Factor: 1

Data Qualifiers: None

Mr. Justin King
Parsons Environment & Infrastructure, Inc.
100 W. Walnut St
Pasadena, CA, 91124

Lab Reference # PEI OCAQ1021
Project Name: LAUSD Basset Street
Project #:

Organochlorine Pesticides (EPA 8081A)

Client Sample ID	Lab Sample Number	Date Received	Date Sampled	Date Extracted	Date Analyzed	Matrix
SB-4-0.0	OCAQ1021-08	1/6/2025 11:00	1/3/2025	1/7/2025 15:44	1/10/2025 14:34	Soil

ANALYTE	CAS #	µg/kg	RL
Aldrin	309-00-2	<2.0	2.0
alpha-BHC	319-84-6	<5.0	5.0
beta-BHC	319-85-7	<5.0	5.0
gamma-BHC (Lindane)	58-89-9	<5.0	5.0
delta-BHC	319-86-8	<10	10
Chlordane	57-74-9	<30	30
4,4'-DDD	72-54-8	<10	10
4,4'-DDE	72-55-9	<5.0	5.0
4,4'-DDT	50-29-3	<10	10
Dieldrin	60-57-1	<2.0	2.0
Endosulfan I	959-98-8	<10	10
Endosulfan II	33213-65-9	<5.0	5.0
Endosulfan sulfate	1031-07-8	<10	10
Endrin	72-20-8	<10	10
Endrin aldehyde	7421-93-4	<10	10
Endrin ketone	53494-70-5	<5.0	5.0
Heptachlor	76-44-8	<2.0	2.0
Heptachlor epoxide	1024-57-3	<5.0	5.0
Methoxychlor	72-43-5	<10	10
Toxaphene	8001-35-2	<40	40

Surrogate:	% RC*
Decachlorobiphenyl	75

* Acceptable Recovery: 33-139 %

Dilution Factor: 1

Data Qualifiers: None

Mr. Justin King
Parsons Environment & Infrastructure, Inc.
100 W. Walnut St
Pasadena, CA, 91124

Lab Reference # PEI OCAQ1021
Project Name: LAUSD Basset Street
Project #:

Organochlorine Pesticides (EPA 8081A)

Client Sample ID	Lab Sample Number	Date Received	Date Sampled	Date Extracted	Date Analyzed	Matrix
SB-5-0.0	OCAQ1021-10	1/6/2025 11:00	1/3/2025	1/7/2025 15:44	1/10/2025 14:49	Soil

ANALYTE	CAS #	µg/kg	RL
Aldrin	309-00-2	<2.0	2.0
alpha-BHC	319-84-6	<5.0	5.0
beta-BHC	319-85-7	<5.0	5.0
gamma-BHC (Lindane)	58-89-9	<5.0	5.0
delta-BHC	319-86-8	<10	10
Chlordane	57-74-9	<30	30
4,4'-DDD	72-54-8	<10	10
4,4'-DDE	72-55-9	<5.0	5.0
4,4'-DDT	50-29-3	<10	10
Dieldrin	60-57-1	<2.0	2.0
Endosulfan I	959-98-8	<10	10
Endosulfan II	33213-65-9	<5.0	5.0
Endosulfan sulfate	1031-07-8	<10	10
Endrin	72-20-8	<10	10
Endrin aldehyde	7421-93-4	<10	10
Endrin ketone	53494-70-5	<5.0	5.0
Heptachlor	76-44-8	<2.0	2.0
Heptachlor epoxide	1024-57-3	<5.0	5.0
Methoxychlor	72-43-5	<10	10
Toxaphene	8001-35-2	<40	40

Surrogate:	% RC*
Decachlorobiphenyl	67

* Acceptable Recovery: 33-139 %

Dilution Factor: 1

Data Qualifiers: None

Mr. Justin King
Parsons Environment & Infrastructure, Inc.
100 W. Walnut St
Pasadena, CA, 91124

Lab Reference # PEI OCAQ1021
Project Name: LAUSD Basset Street
Project #:

Organochlorine Pesticides (EPA 8081A)

Client Sample ID	Lab Sample Number	Date Received	Date Sampled	Date Extracted	Date Analyzed	Matrix
SB-6-0.0	OCAQ1021-12	1/6/2025 11:00	1/3/2025	1/7/2025 15:44	1/10/2025 15:04	Soil

ANALYTE	CAS #	µg/kg	RL
Aldrin	309-00-2	<2.0	2.0
alpha-BHC	319-84-6	<5.0	5.0
beta-BHC	319-85-7	<5.0	5.0
gamma-BHC (Lindane)	58-89-9	<5.0	5.0
delta-BHC	319-86-8	<10	10
Chlordane	57-74-9	<30	30
4,4'-DDD	72-54-8	<10	10
4,4'-DDE	72-55-9	<5.0	5.0
4,4'-DDT	50-29-3	<10	10
Dieldrin	60-57-1	<2.0	2.0
Endosulfan I	959-98-8	<10	10
Endosulfan II	33213-65-9	<5.0	5.0
Endosulfan sulfate	1031-07-8	<10	10
Endrin	72-20-8	<10	10
Endrin aldehyde	7421-93-4	<10	10
Endrin ketone	53494-70-5	<5.0	5.0
Heptachlor	76-44-8	<2.0	2.0
Heptachlor epoxide	1024-57-3	<5.0	5.0
Methoxychlor	72-43-5	<10	10
Toxaphene	8001-35-2	<40	40

Surrogate:	% RC*
Decachlorobiphenyl	73

* Acceptable Recovery: 33-139 %

Dilution Factor: 1

Data Qualifiers: None

Mr. Justin King
Parsons Environment & Infrastructure, Inc.
100 W. Walnut St
Pasadena, CA, 91124

Lab Reference # PEI OCAQ1021
Project Name: LAUSD Basset Street
Project #:

Organochlorine Pesticides (EPA 8081A)

Client Sample ID	Lab Sample Number	Date Received	Date Sampled	Date Extracted	Date Analyzed	Matrix
SB-7-0.0	OCAQ1021-14	1/6/2025 11:00	1/3/2025	1/7/2025 15:44	1/10/2025 15:18	Soil

ANALYTE	CAS #	µg/kg	RL
Aldrin	309-00-2	<2.0	2.0
alpha-BHC	319-84-6	<5.0	5.0
beta-BHC	319-85-7	<5.0	5.0
gamma-BHC (Lindane)	58-89-9	<5.0	5.0
delta-BHC	319-86-8	<10	10
Chlordane	57-74-9	<30	30
4,4'-DDD	72-54-8	<10	10
4,4'-DDE	72-55-9	<5.0	5.0
4,4'-DDT	50-29-3	<10	10
Dieldrin	60-57-1	<2.0	2.0
Endosulfan I	959-98-8	<10	10
Endosulfan II	33213-65-9	<5.0	5.0
Endosulfan sulfate	1031-07-8	<10	10
Endrin	72-20-8	<10	10
Endrin aldehyde	7421-93-4	<10	10
Endrin ketone	53494-70-5	<5.0	5.0
Heptachlor	76-44-8	<2.0	2.0
Heptachlor epoxide	1024-57-3	<5.0	5.0
Methoxychlor	72-43-5	<10	10
Toxaphene	8001-35-2	<40	40

Surrogate:	% RC*
Decachlorobiphenyl	71

* Acceptable Recovery: 33-139 %

Dilution Factor: 1

Data Qualifiers: None

Mr. Justin King
Parsons Environment & Infrastructure, Inc.
100 W. Walnut St
Pasadena, CA, 91124

Lab Reference # PEI OCAQ1021
Project Name: LAUSD Basset Street
Project #:

Organochlorine Pesticides (EPA 8081A)

Client Sample ID	Lab Sample Number	Date Received	Date Sampled	Date Extracted	Date Analyzed	Matrix
SB-8-0.0	OCAQ1021-16	1/6/2025 11:00	1/3/2025	1/7/2025 15:44	1/10/2025 15:33	Soil

ANALYTE	CAS #	µg/kg	RL
Aldrin	309-00-2	<8.0	8.0
alpha-BHC	319-84-6	<20	20
beta-BHC	319-85-7	<20	20
gamma-BHC (Lindane)	58-89-9	<20	20
delta-BHC	319-86-8	<40	40
Chlordane	57-74-9	<120	120
4,4'-DDD	72-54-8	<40	40
4,4'-DDE	72-55-9	<20	20
4,4'-DDT	50-29-3	<40	40
Dieldrin	60-57-1	<8.0	8.0
Endosulfan I	959-98-8	<40	40
Endosulfan II	33213-65-9	<20	20
Endosulfan sulfate	1031-07-8	<40	40
Endrin	72-20-8	<40	40
Endrin aldehyde	7421-93-4	<40	40
Endrin ketone	53494-70-5	<20	20
Heptachlor	76-44-8	<8.0	8.0
Heptachlor epoxide	1024-57-3	<20	20
Methoxychlor	72-43-5	<40	40
Toxaphene	8001-35-2	<160	160

Surrogate:	% RC*
Decachlorobiphenyl	78

* Acceptable Recovery: 33-139 %

Dilution Factor: 4

Data Qualifiers: D1,

Mr. Justin King
Parsons Environment & Infrastructure, Inc.
100 W. Walnut St
Pasadena, CA, 91124

Lab Reference # PEI OCAQ1021
Project Name: LAUSD Basset Street
Project #:

Organochlorine Pesticides (EPA 8081A)

Client Sample ID	Lab Sample Number	Date Received	Date Sampled	Date Extracted	Date Analyzed	Matrix
SB-9-0.0	OCAQ1021-18	1/6/2025 11:00	1/3/2025	1/7/2025 15:44	1/10/2025 15:47	Soil

ANALYTE	CAS #	µg/kg	RL
Aldrin	309-00-2	<2.0	2.0
alpha-BHC	319-84-6	<5.0	5.0
beta-BHC	319-85-7	<5.0	5.0
gamma-BHC (Lindane)	58-89-9	<5.0	5.0
delta-BHC	319-86-8	<10	10
Chlordane	57-74-9	<30	30
4,4'-DDD	72-54-8	<10	10
4,4'-DDE	72-55-9	<5.0	5.0
4,4'-DDT	50-29-3	<10	10
Dieldrin	60-57-1	<2.0	2.0
Endosulfan I	959-98-8	<10	10
Endosulfan II	33213-65-9	<5.0	5.0
Endosulfan sulfate	1031-07-8	<10	10
Endrin	72-20-8	<10	10
Endrin aldehyde	7421-93-4	<10	10
Endrin ketone	53494-70-5	<5.0	5.0
Heptachlor	76-44-8	<2.0	2.0
Heptachlor epoxide	1024-57-3	<5.0	5.0
Methoxychlor	72-43-5	<10	10
Toxaphene	8001-35-2	<40	40

Surrogate:	% RC*
Decachlorobiphenyl	35

* Acceptable Recovery: 33-139 %

Dilution Factor: 1

Data Qualifiers: None

Mr. Justin King
Parsons Environment & Infrastructure, Inc.
100 W. Walnut St
Pasadena, CA, 91124

Lab Reference # PEI OCAQ1021
Project Name: LAUSD Basset Street
Project #:

Organochlorine Pesticides (EPA 8081A)

Client Sample ID	Lab Sample Number	Date Received	Date Sampled	Date Extracted	Date Analyzed	Matrix
SB-9-0.0D	OCAQ1021-20	1/6/2025 11:00	1/3/2025	1/7/2025 15:44	1/10/2025 16:02	Soil

ANALYTE	CAS #	µg/kg	RL
Aldrin	309-00-2	<2.0	2.0
alpha-BHC	319-84-6	<5.0	5.0
beta-BHC	319-85-7	<5.0	5.0
gamma-BHC (Lindane)	58-89-9	<5.0	5.0
delta-BHC	319-86-8	<10	10
Chlordane	57-74-9	<30	30
4,4'-DDD	72-54-8	<10	10
4,4'-DDE	72-55-9	<5.0	5.0
4,4'-DDT	50-29-3	<10	10
Dieldrin	60-57-1	<2.0	2.0
Endosulfan I	959-98-8	<10	10
Endosulfan II	33213-65-9	<5.0	5.0
Endosulfan sulfate	1031-07-8	<10	10
Endrin	72-20-8	<10	10
Endrin aldehyde	7421-93-4	<10	10
Endrin ketone	53494-70-5	<5.0	5.0
Heptachlor	76-44-8	<2.0	2.0
Heptachlor epoxide	1024-57-3	<5.0	5.0
Methoxychlor	72-43-5	<10	10
Toxaphene	8001-35-2	<40	40

Surrogate:	% RC*
Decachlorobiphenyl	73

* Acceptable Recovery: 33-139 %

Dilution Factor: 1

Data Qualifiers: None

Mr. Justin King
Parsons Environment & Infrastructure, Inc.
100 W. Walnut St
Pasadena, CA, 91124

Lab Reference # PEI OCAQ1021
Project Name: LAUSD Basset Street
Project #:

Organochlorine Pesticides (EPA 8081A)

Client Sample ID	Lab Sample Number	Date Received	Date Sampled	Date Extracted	Date Analyzed	Matrix
SB-10-0.0	OCAQ1021-21	1/6/2025 11:00	1/3/2025	1/7/2025 15:44	1/10/2025 16:17	Soil

ANALYTE	CAS #	µg/kg	RL
Aldrin	309-00-2	<2.0	2.0
alpha-BHC	319-84-6	<5.0	5.0
beta-BHC	319-85-7	<5.0	5.0
gamma-BHC (Lindane)	58-89-9	<5.0	5.0
delta-BHC	319-86-8	<10	10
Chlordane	57-74-9	<30	30
4,4'-DDD	72-54-8	<10	10
4,4'-DDE	72-55-9	<5.0	5.0
4,4'-DDT	50-29-3	<10	10
Dieldrin	60-57-1	<2.0	2.0
Endosulfan I	959-98-8	<10	10
Endosulfan II	33213-65-9	<5.0	5.0
Endosulfan sulfate	1031-07-8	<10	10
Endrin	72-20-8	<10	10
Endrin aldehyde	7421-93-4	<10	10
Endrin ketone	53494-70-5	<5.0	5.0
Heptachlor	76-44-8	<2.0	2.0
Heptachlor epoxide	1024-57-3	<5.0	5.0
Methoxychlor	72-43-5	<10	10
Toxaphene	8001-35-2	<40	40

Surrogate:	% RC*
Decachlorobiphenyl	71

* Acceptable Recovery: 33-139 %

Dilution Factor: 1

Data Qualifiers: None

Mr. Justin King
Parsons Environment & Infrastructure, Inc.
100 W. Walnut St
Pasadena, CA, 91124

Lab Reference # PEI OCAQ1021
Project Name: LAUSD Basset Street
Project #:

Organochlorine Pesticides (EPA 8081A)

Client Sample ID	Lab Sample Number	Date Received	Date Sampled	Date Extracted	Date Analyzed	Matrix
SB-11-0.0	OCAQ1021-23	1/6/2025 11:00	1/3/2025	1/7/2025 15:44	1/10/2025 13:36	Soil

ANALYTE	CAS #	µg/kg	RL
Aldrin	309-00-2	<4.0	4.0
alpha-BHC	319-84-6	<10	10
beta-BHC	319-85-7	<10	10
gamma-BHC (Lindane)	58-89-9	<10	10
delta-BHC	319-86-8	<20	20
Chlordane	57-74-9	<60	60
4,4'-DDD	72-54-8	<20	20
4,4'-DDE	72-55-9	10	10
4,4'-DDT	50-29-3	<20	20
Dieldrin	60-57-1	<4.0	4.0
Endosulfan I	959-98-8	<20	20
Endosulfan II	33213-65-9	<10	10
Endosulfan sulfate	1031-07-8	<20	20
Endrin	72-20-8	<20	20
Endrin aldehyde	7421-93-4	<20	20
Endrin ketone	53494-70-5	<10	10
Heptachlor	76-44-8	<4.0	4.0
Heptachlor epoxide	1024-57-3	<10	10
Methoxychlor	72-43-5	<20	20
Toxaphene	8001-35-2	<80	80

Surrogate:	% RC*
Decachlorobiphenyl	70

* Acceptable Recovery: 33-139 %

Dilution Factor: 2

Data Qualifiers: D1,

Mr. Justin King
Parsons Environment & Infrastructure, Inc.
100 W. Walnut St
Pasadena, CA, 91124

Lab Reference # PEI OCAQ1021
Project Name: LAUSD Basset Street
Project #:

Polychlorinated Biphenyl's (EPA 8082)

Client Sample ID	Lab Sample Number	Date Received	Date Sampled	Date Extracted	Date Analyzed	Matrix
Method Blank	MBVV0107251			1/7/2025 15:44	1/9/2025 10:23	Soil

ANALYTE	CAS #	µg/kg	RL
PCB-1016	12674-11-2	<25	25
PCB-1221	11104-28-2	<25	25
PCB-1232	11141-16-5	<25	25
PCB-1242	53469-21-9	<25	25
PCB-1248	12672-29-6	<25	25
PCB-1254	11097-69-1	<25	25
PCB-1260	11096-82-5	<25	25

Surrogate:	% RC*
Decachlorobiphenyl	101

* Acceptable Recovery: 33-139 %

Dilution Factor: 1

Data Qualifiers: None

Client Sample ID	Lab Sample Number	Date Received	Date Sampled	Date Extracted	Date Analyzed	Matrix
SB-1-0.0	OCAQ1021-01	1/6/2025 11:00	1/3/2025	1/7/2025 15:44	1/9/2025 11:36	Soil

ANALYTE	CAS #	µg/kg	RL
PCB-1016	12674-11-2	<25	25
PCB-1221	11104-28-2	<25	25
PCB-1232	11141-16-5	<25	25
PCB-1242	53469-21-9	<25	25
PCB-1248	12672-29-6	<25	25
PCB-1254	11097-69-1	<25	25
PCB-1260	11096-82-5	<25	25

Surrogate:	% RC*
Decachlorobiphenyl	91

* Acceptable Recovery: 33-139 %

Dilution Factor: 1

Data Qualifiers: None

Client Sample ID	Lab Sample Number	Date Received	Date Sampled	Date Extracted	Date Analyzed	Matrix
SB-2-0.0	OCAQ1021-03	1/6/2025 11:00	1/3/2025	1/7/2025 15:44	1/9/2025 11:51	Soil

ANALYTE	CAS #	µg/kg	RL
PCB-1016	12674-11-2	<25	25
PCB-1221	11104-28-2	<25	25
PCB-1232	11141-16-5	<25	25
PCB-1242	53469-21-9	<25	25
PCB-1248	12672-29-6	<25	25
PCB-1254	11097-69-1	<25	25
PCB-1260	11096-82-5	<25	25

Surrogate:	% RC*
Decachlorobiphenyl	89

* Acceptable Recovery: 33-139 %

Dilution Factor: 1

Data Qualifiers: None

Mr. Justin King
Parsons Environment & Infrastructure, Inc.
100 W. Walnut St
Pasadena, CA, 91124

Lab Reference # PEI OCAQ1021
Project Name: LAUSD Basset Street
Project #:

Polychlorinated Biphenyl's (EPA 8082)

Client Sample ID	Lab Sample Number	Date Received	Date Sampled	Date Extracted	Date Analyzed	Matrix
SB-3-0.0	OCAQ1021-05	1/6/2025 11:00	1/3/2025	1/7/2025 15:44	1/9/2025 12:05	Soil

ANALYTE	CAS #	µg/kg	RL
PCB-1016	12674-11-2	<25	25
PCB-1221	11104-28-2	<25	25
PCB-1232	11141-16-5	<25	25
PCB-1242	53469-21-9	<25	25
PCB-1248	12672-29-6	<25	25
PCB-1254	11097-69-1	<25	25
PCB-1260	11096-82-5	<25	25

Surrogate:	% RC*
Decachlorobiphenyl	94

* Acceptable Recovery: 33-139 %

Dilution Factor: 1

Data Qualifiers: None

Client Sample ID	Lab Sample Number	Date Received	Date Sampled	Date Extracted	Date Analyzed	Matrix
SB-3-1.0D	OCAQ1021-07	1/6/2025 11:00	1/3/2025	1/7/2025 15:44	1/9/2025 12:20	Soil

ANALYTE	CAS #	µg/kg	RL
PCB-1016	12674-11-2	<25	25
PCB-1221	11104-28-2	<25	25
PCB-1232	11141-16-5	<25	25
PCB-1242	53469-21-9	<25	25
PCB-1248	12672-29-6	<25	25
PCB-1254	11097-69-1	<25	25
PCB-1260	11096-82-5	<25	25

Surrogate:	% RC*
Decachlorobiphenyl	88

* Acceptable Recovery: 33-139 %

Dilution Factor: 1

Data Qualifiers: None

Client Sample ID	Lab Sample Number	Date Received	Date Sampled	Date Extracted	Date Analyzed	Matrix
SB-4-0.0	OCAQ1021-08	1/6/2025 11:00	1/3/2025	1/7/2025 15:44	1/9/2025 12:34	Soil

ANALYTE	CAS #	µg/kg	RL
PCB-1016	12674-11-2	<25	25
PCB-1221	11104-28-2	<25	25
PCB-1232	11141-16-5	<25	25
PCB-1242	53469-21-9	<25	25
PCB-1248	12672-29-6	<25	25
PCB-1254	11097-69-1	<25	25
PCB-1260	11096-82-5	<25	25

Surrogate:	% RC*
Decachlorobiphenyl	82

* Acceptable Recovery: 33-139 %

Dilution Factor: 1

Data Qualifiers: None

Mr. Justin King
Parsons Environment & Infrastructure, Inc.
100 W. Walnut St
Pasadena, CA, 91124

Lab Reference # PEI OCAQ1021
Project Name: LAUSD Basset Street
Project #:

Polychlorinated Biphenyl's (EPA 8082)

Client Sample ID	Lab Sample Number	Date Received	Date Sampled	Date Extracted	Date Analyzed	Matrix
SB-5-0.0	OCAQ1021-10	1/6/2025 11:00	1/3/2025	1/7/2025 15:44	1/9/2025 12:49	Soil

ANALYTE	CAS #	µg/kg	RL
PCB-1016	12674-11-2	<25	25
PCB-1221	11104-28-2	<25	25
PCB-1232	11141-16-5	<25	25
PCB-1242	53469-21-9	<25	25
PCB-1248	12672-29-6	<25	25
PCB-1254	11097-69-1	<25	25
PCB-1260	11096-82-5	<25	25

Surrogate:	% RC*
Decachlorobiphenyl	89

* Acceptable Recovery: 33-139 %

Dilution Factor: 1

Data Qualifiers: None

Client Sample ID	Lab Sample Number	Date Received	Date Sampled	Date Extracted	Date Analyzed	Matrix
SB-6-0.0	OCAQ1021-12	1/6/2025 11:00	1/3/2025	1/7/2025 15:44	1/9/2025 13:04	Soil

ANALYTE	CAS #	µg/kg	RL
PCB-1016	12674-11-2	<25	25
PCB-1221	11104-28-2	<25	25
PCB-1232	11141-16-5	<25	25
PCB-1242	53469-21-9	<25	25
PCB-1248	12672-29-6	<25	25
PCB-1254	11097-69-1	<25	25
PCB-1260	11096-82-5	<25	25

Surrogate:	% RC*
Decachlorobiphenyl	88

* Acceptable Recovery: 33-139 %

Dilution Factor: 1

Data Qualifiers: None

Client Sample ID	Lab Sample Number	Date Received	Date Sampled	Date Extracted	Date Analyzed	Matrix
SB-7-0.0	OCAQ1021-14	1/6/2025 11:00	1/3/2025	1/7/2025 15:44	1/9/2025 13:18	Soil

ANALYTE	CAS #	µg/kg	RL
PCB-1016	12674-11-2	<25	25
PCB-1221	11104-28-2	<25	25
PCB-1232	11141-16-5	<25	25
PCB-1242	53469-21-9	<25	25
PCB-1248	12672-29-6	<25	25
PCB-1254	11097-69-1	<25	25
PCB-1260	11096-82-5	<25	25

Surrogate:	% RC*
Decachlorobiphenyl	89

* Acceptable Recovery: 33-139 %

Dilution Factor: 1

Data Qualifiers: None

Mr. Justin King
Parsons Environment & Infrastructure, Inc.
100 W. Walnut St
Pasadena, CA, 91124

Lab Reference # PEI OCAQ1021
Project Name: LAUSD Basset Street
Project #:

Polychlorinated Biphenyl's (EPA 8082)

Client Sample ID	Lab Sample Number	Date Received	Date Sampled	Date Extracted	Date Analyzed	Matrix
SB-8-0.0	OCAQ1021-16	1/6/2025 11:00	1/3/2025	1/7/2025 15:44	1/9/2025 13:33	Soil

ANALYTE	CAS #	µg/kg	RL
PCB-1016	12674-11-2	<100	100
PCB-1221	11104-28-2	<100	100
PCB-1232	11141-16-5	<100	100
PCB-1242	53469-21-9	<100	100
PCB-1248	12672-29-6	<100	100
PCB-1254	11097-69-1	<100	100
PCB-1260	11096-82-5	<100	100

Surrogate:	% RC*
Decachlorobiphenyl	81

* Acceptable Recovery: 33-139 %

Dilution Factor: 4

Data Qualifiers: D1,

Client Sample ID	Lab Sample Number	Date Received	Date Sampled	Date Extracted	Date Analyzed	Matrix
SB-9-0.0	OCAQ1021-18	1/6/2025 11:00	1/3/2025	1/7/2025 15:44	1/9/2025 13:47	Soil

ANALYTE	CAS #	µg/kg	RL
PCB-1016	12674-11-2	<25	25
PCB-1221	11104-28-2	<25	25
PCB-1232	11141-16-5	<25	25
PCB-1242	53469-21-9	<25	25
PCB-1248	12672-29-6	<25	25
PCB-1254	11097-69-1	<25	25
PCB-1260	11096-82-5	<25	25

Surrogate:	% RC*
Decachlorobiphenyl	40

* Acceptable Recovery: 33-139 %

Dilution Factor: 1

Data Qualifiers: None

Client Sample ID	Lab Sample Number	Date Received	Date Sampled	Date Extracted	Date Analyzed	Matrix
SB-9-0.0D	OCAQ1021-20	1/6/2025 11:00	1/3/2025	1/7/2025 15:44	1/9/2025 14:02	Soil

ANALYTE	CAS #	µg/kg	RL
PCB-1016	12674-11-2	<25	25
PCB-1221	11104-28-2	<25	25
PCB-1232	11141-16-5	<25	25
PCB-1242	53469-21-9	<25	25
PCB-1248	12672-29-6	<25	25
PCB-1254	11097-69-1	<25	25
PCB-1260	11096-82-5	<25	25

Surrogate:	% RC*
Decachlorobiphenyl	89

* Acceptable Recovery: 33-139 %

Dilution Factor: 1

Data Qualifiers: None

Mr. Justin King
Parsons Environment & Infrastructure, Inc.
100 W. Walnut St
Pasadena, CA, 91124

Lab Reference # PEI OCAQ1021
Project Name: LAUSD Basset Street
Project #:

Polychlorinated Biphenyl's (EPA 8082)

Client Sample ID	Lab Sample Number	Date Received	Date Sampled	Date Extracted	Date Analyzed	Matrix
SB-10-0.0	OCAQ1021-21	1/6/2025 11:00	1/3/2025	1/7/2025 15:44	1/9/2025 14:16	Soil

ANALYTE	CAS #	µg/kg	RL
PCB-1016	12674-11-2	<25	25
PCB-1221	11104-28-2	<25	25
PCB-1232	11141-16-5	<25	25
PCB-1242	53469-21-9	<25	25
PCB-1248	12672-29-6	<25	25
PCB-1254	11097-69-1	<25	25
PCB-1260	11096-82-5	<25	25

Surrogate:	% RC*
Decachlorobiphenyl	85

* Acceptable Recovery: 33-139 %

Dilution Factor: 1

Data Qualifiers: None

Client Sample ID	Lab Sample Number	Date Received	Date Sampled	Date Extracted	Date Analyzed	Matrix
SB-11-0.0	OCAQ1021-23	1/6/2025 11:00	1/3/2025	1/7/2025 15:44	1/9/2025 14:31	Soil

ANALYTE	CAS #	µg/kg	RL
PCB-1016	12674-11-2	<100	100
PCB-1221	11104-28-2	<100	100
PCB-1232	11141-16-5	<100	100
PCB-1242	53469-21-9	<100	100
PCB-1248	12672-29-6	<100	100
PCB-1254	11097-69-1	<100	100
PCB-1260	11096-82-5	<100	100

Surrogate:	% RC*
Decachlorobiphenyl	81

* Acceptable Recovery: 33-139 %

Dilution Factor: 4

Data Qualifiers: D1,

Mr. Justin King
Parsons Environment & Infrastructure, Inc.
100 W. Walnut St
Pasadena, CA, 91124

Lab Reference # PEI OCAQ1021
Project Name: LAUSD Basset Street
Project #:

Polynuclear Aromatic Hydrocarbons by SIM (EPA 8270C)

Client Sample ID	Lab Sample Number	Date Received	Date Sampled	Date Extracted	Date Analyzed	Matrix
Method Blank	MBGS0107251			1/7/2025 14:40	1/7/2025 16:43	Soil

ANALYTE	CAS #	µg/kg	RL
Acenaphthene:	83-32-9	<5.0	5.0
Acenaphthylene:	208-96-8	<5.0	5.0
Anthracene:	120-12-7	<5.0	5.0
Benz(a)anthracene:	56-55-3	<5.0	5.0
Benzo(a)pyrene:	50-32-8	<5.0	5.0
Benzo(b)fluoranthene:	205-99-2	<5.0	5.0
Benzo(k)fluoranthene:	207-08-9	<5.0	5.0
Benzo(g,h,i)perylene:	191-24-2	<5.0	5.0
Chrysene:	218-01-9	<5.0	5.0
Dibenz(a,h)anthracene:	53-70-3	<6.0	6.0
Fluoranthene:	206-44-0	<6.5	6.5
Pyrene:	129-00-0	<6.5	6.5
Fluorene:	86-73-7	<5.0	5.0
Phenanthrene:	85-01-8	<5.0	5.0
Indeno(1,2,3-cd)pyrene:	193-39-5	<5.0	5.0
Naphthalene:	91-20-3	<5.0	5.0

Surrogate:	% RC*
Nitrobenzene-d5	88

* Acceptable Recovery: 27-134 %

Dilution Factor: 1

Data Qualifiers: None

Client Sample ID	Lab Sample Number	Date Received	Date Sampled	Date Extracted	Date Analyzed	Matrix
SB-1-0.0	OCAQ1021-01	1/6/2025 11:00	1/3/2025	1/7/2025 14:40	1/7/2025 19:21	Soil

ANALYTE	CAS #	µg/kg	RL
Acenaphthene:	83-32-9	<5.0	5.0
Acenaphthylene:	208-96-8	<5.0	5.0
Anthracene:	120-12-7	<5.0	5.0
Benz(a)anthracene:	56-55-3	<5.0	5.0
Benzo(a)pyrene:	50-32-8	<5.0	5.0
Benzo(b)fluoranthene:	205-99-2	<5.0	5.0
Benzo(k)fluoranthene:	207-08-9	<5.0	5.0
Benzo(g,h,i)perylene:	191-24-2	<5.0	5.0
Chrysene:	218-01-9	<5.0	5.0
Dibenz(a,h)anthracene:	53-70-3	<6.0	6.0
Fluoranthene:	206-44-0	<6.5	6.5
Pyrene:	129-00-0	<6.5	6.5
Fluorene:	86-73-7	<5.0	5.0
Phenanthrene:	85-01-8	<5.0	5.0
Indeno(1,2,3-cd)pyrene:	193-39-5	<5.0	5.0
Naphthalene:	91-20-3	<5.0	5.0

Surrogate:	% RC*
Nitrobenzene-d5	96

* Acceptable Recovery: 27-134 %

Dilution Factor: 1

Data Qualifiers: None

Mr. Justin King
Parsons Environment & Infrastructure, Inc.
100 W. Walnut St
Pasadena, CA, 91124

Lab Reference # PEI OCAQ1021
Project Name: LAUSD Basset Street
Project #:

Polynuclear Aromatic Hydrocarbons by SIM (EPA 8270C)

Client Sample ID	Lab Sample Number	Date Received	Date Sampled	Date Extracted	Date Analyzed	Matrix
SB-2-0.0	OCAQ1021-03	1/6/2025 11:00	1/3/2025	1/7/2025 14:40	1/7/2025 19:53	Soil

ANALYTE	CAS #	µg/kg	RL
Acenaphthene:	83-32-9	<5.0	5.0
Acenaphthylene:	208-96-8	15	5.0
Anthracene:	120-12-7	<5.0	5.0
Benz(a)anthracene:	56-55-3	<5.0	5.0
Benzo(a)pyrene:	50-32-8	18	5.0
Benzo(b)fluoranthene:	205-99-2	<5.0	5.0
Benzo(k)fluoranthene:	207-08-9	<5.0	5.0
Benzo(g,h,i)perylene:	191-24-2	54	5.0
Chrysene:	218-01-9	<5.0	5.0
Dibenz(a,h)anthracene:	53-70-3	<6.0	6.0
Fluoranthene:	206-44-0	54	6.5
Pyrene:	129-00-0	95	6.5
Fluorene:	86-73-7	<5.0	5.0
Phenanthrene:	85-01-8	22	5.0
Indeno(1,2,3-cd)pyrene:	193-39-5	21	5.0
Naphthalene:	91-20-3	<5.0	5.0

Surrogate:	% RC*
Nitrobenzene-d5	99

* Acceptable Recovery: 27-134 %

Dilution Factor: 1

Data Qualifiers: None

Client Sample ID	Lab Sample Number	Date Received	Date Sampled	Date Extracted	Date Analyzed	Matrix
SB-3-0.0	OCAQ1021-05	1/6/2025 11:00	1/3/2025	1/7/2025 14:40	1/7/2025 20:25	Soil

ANALYTE	CAS #	µg/kg	RL
Acenaphthene:	83-32-9	<5.0	5.0
Acenaphthylene:	208-96-8	<5.0	5.0
Anthracene:	120-12-7	<5.0	5.0
Benz(a)anthracene:	56-55-3	<5.0	5.0
Benzo(a)pyrene:	50-32-8	<5.0	5.0
Benzo(b)fluoranthene:	205-99-2	<5.0	5.0
Benzo(k)fluoranthene:	207-08-9	<5.0	5.0
Benzo(g,h,i)perylene:	191-24-2	<5.0	5.0
Chrysene:	218-01-9	<5.0	5.0
Dibenz(a,h)anthracene:	53-70-3	<6.0	6.0
Fluoranthene:	206-44-0	<6.5	6.5
Pyrene:	129-00-0	<6.5	6.5
Fluorene:	86-73-7	<5.0	5.0
Phenanthrene:	85-01-8	<5.0	5.0
Indeno(1,2,3-cd)pyrene:	193-39-5	<5.0	5.0
Naphthalene:	91-20-3	<5.0	5.0

Surrogate:	% RC*
Nitrobenzene-d5	103

* Acceptable Recovery: 27-134 %

Dilution Factor: 1

Data Qualifiers: None

Mr. Justin King
Parsons Environment & Infrastructure, Inc.
100 W. Walnut St
Pasadena, CA, 91124

Lab Reference # PEI OCAQ1021
Project Name: LAUSD Basset Street
Project #:

Polynuclear Aromatic Hydrocarbons by SIM (EPA 8270C)

Client Sample ID	Lab Sample Number	Date Received	Date Sampled	Date Extracted	Date Analyzed	Matrix
SB-3-1.0D	OCAQ1021-07	1/6/2025 11:00	1/3/2025	1/7/2025 14:40	1/7/2025 20:57	Soil

ANALYTE	CAS #	µg/kg	RL
Acenaphthene:	83-32-9	<5.0	5.0
Acenaphthylene:	208-96-8	<5.0	5.0
Anthracene:	120-12-7	<5.0	5.0
Benz(a)anthracene:	56-55-3	<5.0	5.0
Benzo(a)pyrene:	50-32-8	<5.0	5.0
Benzo(b)fluoranthene:	205-99-2	<5.0	5.0
Benzo(k)fluoranthene:	207-08-9	<5.0	5.0
Benzo(g,h,i)perylene:	191-24-2	<5.0	5.0
Chrysene:	218-01-9	<5.0	5.0
Dibenz(a,h)anthracene:	53-70-3	<6.0	6.0
Fluoranthene:	206-44-0	<6.5	6.5
Pyrene:	129-00-0	<6.5	6.5
Fluorene:	86-73-7	<5.0	5.0
Phenanthrene:	85-01-8	<5.0	5.0
Indeno(1,2,3-cd)pyrene:	193-39-5	<5.0	5.0
Naphthalene:	91-20-3	<5.0	5.0

Surrogate:	% RC*
Nitrobenzene-d5	106

* Acceptable Recovery: 27-134 %

Dilution Factor: 1

Data Qualifiers: None

Client Sample ID	Lab Sample Number	Date Received	Date Sampled	Date Extracted	Date Analyzed	Matrix
SB-4-0.0	OCAQ1021-08	1/6/2025 11:00	1/3/2025	1/7/2025 14:40	1/7/2025 21:28	Soil

ANALYTE	CAS #	µg/kg	RL
Acenaphthene:	83-32-9	<5.0	5.0
Acenaphthylene:	208-96-8	<5.0	5.0
Anthracene:	120-12-7	<5.0	5.0
Benz(a)anthracene:	56-55-3	<5.0	5.0
Benzo(a)pyrene:	50-32-8	<5.0	5.0
Benzo(b)fluoranthene:	205-99-2	<5.0	5.0
Benzo(k)fluoranthene:	207-08-9	<5.0	5.0
Benzo(g,h,i)perylene:	191-24-2	<5.0	5.0
Chrysene:	218-01-9	<5.0	5.0
Dibenz(a,h)anthracene:	53-70-3	<6.0	6.0
Fluoranthene:	206-44-0	<6.5	6.5
Pyrene:	129-00-0	<6.5	6.5
Fluorene:	86-73-7	<5.0	5.0
Phenanthrene:	85-01-8	<5.0	5.0
Indeno(1,2,3-cd)pyrene:	193-39-5	<5.0	5.0
Naphthalene:	91-20-3	<5.0	5.0

Surrogate:	% RC*
Nitrobenzene-d5	95

* Acceptable Recovery: 27-134 %

Dilution Factor: 1

Data Qualifiers: None

Mr. Justin King
Parsons Environment & Infrastructure, Inc.
100 W. Walnut St
Pasadena, CA, 91124

Lab Reference # PEI OCAQ1021
Project Name: LAUSD Basset Street
Project #:

Polynuclear Aromatic Hydrocarbons by SIM (EPA 8270C)

Client Sample ID	Lab Sample Number	Date Received	Date Sampled	Date Extracted	Date Analyzed	Matrix
SB-5-0.0	OCAQ1021-10	1/6/2025 11:00	1/3/2025	1/7/2025 14:40	1/7/2025 21:59	Soil

ANALYTE	CAS #	µg/kg	RL
Acenaphthene:	83-32-9	<5.0	5.0
Acenaphthylene:	208-96-8	<5.0	5.0
Anthracene:	120-12-7	<5.0	5.0
Benz(a)anthracene:	56-55-3	<5.0	5.0
Benzo(a)pyrene:	50-32-8	<5.0	5.0
Benzo(b)fluoranthene:	205-99-2	<5.0	5.0
Benzo(k)fluoranthene:	207-08-9	<5.0	5.0
Benzo(g,h,i)perylene:	191-24-2	<5.0	5.0
Chrysene:	218-01-9	<5.0	5.0
Dibenz(a,h)anthracene:	53-70-3	<6.0	6.0
Fluoranthene:	206-44-0	<6.5	6.5
Pyrene:	129-00-0	<6.5	6.5
Fluorene:	86-73-7	<5.0	5.0
Phenanthrene:	85-01-8	<5.0	5.0
Indeno(1,2,3-cd)pyrene:	193-39-5	<5.0	5.0
Naphthalene:	91-20-3	<5.0	5.0

Surrogate:	% RC*
Nitrobenzene-d5	99

* Acceptable Recovery: 27-134 %

Dilution Factor: 1

Data Qualifiers: None

Client Sample ID	Lab Sample Number	Date Received	Date Sampled	Date Extracted	Date Analyzed	Matrix
SB-6-0.0	OCAQ1021-12	1/6/2025 11:00	1/3/2025	1/7/2025 14:40	1/7/2025 22:32	Soil

ANALYTE	CAS #	µg/kg	RL
Acenaphthene:	83-32-9	<5.0	5.0
Acenaphthylene:	208-96-8	<5.0	5.0
Anthracene:	120-12-7	<5.0	5.0
Benz(a)anthracene:	56-55-3	<5.0	5.0
Benzo(a)pyrene:	50-32-8	<5.0	5.0
Benzo(b)fluoranthene:	205-99-2	<5.0	5.0
Benzo(k)fluoranthene:	207-08-9	<5.0	5.0
Benzo(g,h,i)perylene:	191-24-2	<5.0	5.0
Chrysene:	218-01-9	<5.0	5.0
Dibenz(a,h)anthracene:	53-70-3	<6.0	6.0
Fluoranthene:	206-44-0	<6.5	6.5
Pyrene:	129-00-0	<6.5	6.5
Fluorene:	86-73-7	<5.0	5.0
Phenanthrene:	85-01-8	<5.0	5.0
Indeno(1,2,3-cd)pyrene:	193-39-5	<5.0	5.0
Naphthalene:	91-20-3	<5.0	5.0

Surrogate:	% RC*
Nitrobenzene-d5	100

* Acceptable Recovery: 27-134 %

Dilution Factor: 1

Data Qualifiers: None

Mr. Justin King
Parsons Environment & Infrastructure, Inc.
100 W. Walnut St
Pasadena, CA, 91124

Lab Reference # PEI OCAQ1021
Project Name: LAUSD Basset Street
Project #:

Polynuclear Aromatic Hydrocarbons by SIM (EPA 8270C)

Client Sample ID	Lab Sample Number	Date Received	Date Sampled	Date Extracted	Date Analyzed	Matrix
SB-7-0.0	OCAQ1021-14	1/6/2025 11:00	1/3/2025	1/7/2025 14:40	1/7/2025 23:04	Soil

ANALYTE	CAS #	µg/kg	RL
Acenaphthene:	83-32-9	<5.0	5.0
Acenaphthylene:	208-96-8	<5.0	5.0
Anthracene:	120-12-7	<5.0	5.0
Benz(a)anthracene:	56-55-3	<5.0	5.0
Benzo(a)pyrene:	50-32-8	<5.0	5.0
Benzo(b)fluoranthene:	205-99-2	<5.0	5.0
Benzo(k)fluoranthene:	207-08-9	<5.0	5.0
Benzo(g,h,i)perylene:	191-24-2	<5.0	5.0
Chrysene:	218-01-9	<5.0	5.0
Dibenz(a,h)anthracene:	53-70-3	<6.0	6.0
Fluoranthene:	206-44-0	<6.5	6.5
Pyrene:	129-00-0	<6.5	6.5
Fluorene:	86-73-7	<5.0	5.0
Phenanthrene:	85-01-8	<5.0	5.0
Indeno(1,2,3-cd)pyrene:	193-39-5	<5.0	5.0
Naphthalene:	91-20-3	<5.0	5.0

Surrogate:	% RC*
Nitrobenzene-d5	91

* Acceptable Recovery: 27-134 %

Dilution Factor: 1

Data Qualifiers: None

Client Sample ID	Lab Sample Number	Date Received	Date Sampled	Date Extracted	Date Analyzed	Matrix
SB-8-0.0	OCAQ1021-16	1/6/2025 11:00	1/3/2025	1/7/2025 14:40	1/7/2025 23:35	Soil

ANALYTE	CAS #	µg/kg	RL
Acenaphthene:	83-32-9	<5.0	5.0
Acenaphthylene:	208-96-8	<5.0	5.0
Anthracene:	120-12-7	<5.0	5.0
Benz(a)anthracene:	56-55-3	<5.0	5.0
Benzo(a)pyrene:	50-32-8	5.3	5.0
Benzo(b)fluoranthene:	205-99-2	<5.0	5.0
Benzo(k)fluoranthene:	207-08-9	<5.0	5.0
Benzo(g,h,i)perylene:	191-24-2	23	5.0
Chrysene:	218-01-9	<5.0	5.0
Dibenz(a,h)anthracene:	53-70-3	<6.0	6.0
Fluoranthene:	206-44-0	<6.5	6.5
Pyrene:	129-00-0	<6.5	6.5
Fluorene:	86-73-7	<5.0	5.0
Phenanthrene:	85-01-8	<5.0	5.0
Indeno(1,2,3-cd)pyrene:	193-39-5	<5.0	5.0
Naphthalene:	91-20-3	<5.0	5.0

Surrogate:	% RC*
Nitrobenzene-d5	98

* Acceptable Recovery: 27-134 %

Dilution Factor: 1

Data Qualifiers: None

Mr. Justin King
Parsons Environment & Infrastructure, Inc.
100 W. Walnut St
Pasadena, CA, 91124

Lab Reference # PEI OCAQ1021
Project Name: LAUSD Basset Street
Project #:

Polynuclear Aromatic Hydrocarbons by SIM (EPA 8270C)

Client Sample ID	Lab Sample Number	Date Received	Date Sampled	Date Extracted	Date Analyzed	Matrix
SB-9-0.0	OCAQ1021-18	1/6/2025 11:00	1/3/2025	1/7/2025 14:40	1/8/2025 0:07	Soil

ANALYTE	CAS #	µg/kg	RL
Acenaphthene:	83-32-9	<5.0	5.0
Acenaphthylene:	208-96-8	<5.0	5.0
Anthracene:	120-12-7	<5.0	5.0
Benz(a)anthracene:	56-55-3	<5.0	5.0
Benzo(a)pyrene:	50-32-8	<5.0	5.0
Benzo(b)fluoranthene:	205-99-2	<5.0	5.0
Benzo(k)fluoranthene:	207-08-9	<5.0	5.0
Benzo(g,h,i)perylene:	191-24-2	<5.0	5.0
Chrysene:	218-01-9	<5.0	5.0
Dibenz(a,h)anthracene:	53-70-3	<6.0	6.0
Fluoranthene:	206-44-0	<6.5	6.5
Pyrene:	129-00-0	<6.5	6.5
Fluorene:	86-73-7	<5.0	5.0
Phenanthrene:	85-01-8	<5.0	5.0
Indeno(1,2,3-cd)pyrene:	193-39-5	<5.0	5.0
Naphthalene:	91-20-3	<5.0	5.0

Surrogate:	% RC*
Nitrobenzene-d5	97

* Acceptable Recovery: 27-134 %

Dilution Factor: 1

Data Qualifiers: None

Client Sample ID	Lab Sample Number	Date Received	Date Sampled	Date Extracted	Date Analyzed	Matrix
SB-9-0.0D	OCAQ1021-20	1/6/2025 11:00	1/3/2025	1/7/2025 14:40	1/8/2025 0:39	Soil

ANALYTE	CAS #	µg/kg	RL
Acenaphthene:	83-32-9	<5.0	5.0
Acenaphthylene:	208-96-8	<5.0	5.0
Anthracene:	120-12-7	<5.0	5.0
Benz(a)anthracene:	56-55-3	<5.0	5.0
Benzo(a)pyrene:	50-32-8	<5.0	5.0
Benzo(b)fluoranthene:	205-99-2	<5.0	5.0
Benzo(k)fluoranthene:	207-08-9	<5.0	5.0
Benzo(g,h,i)perylene:	191-24-2	<5.0	5.0
Chrysene:	218-01-9	<5.0	5.0
Dibenz(a,h)anthracene:	53-70-3	<6.0	6.0
Fluoranthene:	206-44-0	<6.5	6.5
Pyrene:	129-00-0	<6.5	6.5
Fluorene:	86-73-7	<5.0	5.0
Phenanthrene:	85-01-8	<5.0	5.0
Indeno(1,2,3-cd)pyrene:	193-39-5	<5.0	5.0
Naphthalene:	91-20-3	<5.0	5.0

Surrogate:	% RC*
Nitrobenzene-d5	106

* Acceptable Recovery: 27-134 %

Dilution Factor: 1

Data Qualifiers: None

Mr. Justin King
Parsons Environment & Infrastructure, Inc.
100 W. Walnut St
Pasadena, CA, 91124

Lab Reference # PEI OCAQ1021
Project Name: LAUSD Basset Street
Project #:

Polynuclear Aromatic Hydrocarbons by SIM (EPA 8270C)

Client Sample ID	Lab Sample Number	Date Received	Date Sampled	Date Extracted	Date Analyzed	Matrix
SB-10-0.0	OCAQ1021-21	1/6/2025 11:00	1/3/2025	1/7/2025 14:40	1/8/2025 1:11	Soil

ANALYTE	CAS #	µg/kg	RL
Acenaphthene:	83-32-9	<5.0	5.0
Acenaphthylene:	208-96-8	<5.0	5.0
Anthracene:	120-12-7	<5.0	5.0
Benz(a)anthracene:	56-55-3	<5.0	5.0
Benzo(a)pyrene:	50-32-8	<5.0	5.0
Benzo(b)fluoranthene:	205-99-2	<5.0	5.0
Benzo(k)fluoranthene:	207-08-9	<5.0	5.0
Benzo(g,h,i)perylene:	191-24-2	<5.0	5.0
Chrysene:	218-01-9	<5.0	5.0
Dibenz(a,h)anthracene:	53-70-3	<6.0	6.0
Fluoranthene:	206-44-0	<6.5	6.5
Pyrene:	129-00-0	<6.5	6.5
Fluorene:	86-73-7	<5.0	5.0
Phenanthrene:	85-01-8	<5.0	5.0
Indeno(1,2,3-cd)pyrene:	193-39-5	<5.0	5.0
Naphthalene:	91-20-3	<5.0	5.0

Surrogate:	% RC*
Nitrobenzene-d5	104

* Acceptable Recovery: 27-134 %

Dilution Factor: 1

Data Qualifiers: None

Client Sample ID	Lab Sample Number	Date Received	Date Sampled	Date Extracted	Date Analyzed	Matrix
SB-11-0.0	OCAQ1021-23	1/6/2025 11:00	1/3/2025	1/7/2025 14:40	1/8/2025 1:43	Soil

ANALYTE	CAS #	µg/kg	RL
Acenaphthene:	83-32-9	<5.0	5.0
Acenaphthylene:	208-96-8	<5.0	5.0
Anthracene:	120-12-7	<5.0	5.0
Benz(a)anthracene:	56-55-3	<5.0	5.0
Benzo(a)pyrene:	50-32-8	<5.0	5.0
Benzo(b)fluoranthene:	205-99-2	<5.0	5.0
Benzo(k)fluoranthene:	207-08-9	<5.0	5.0
Benzo(g,h,i)perylene:	191-24-2	<5.0	5.0
Chrysene:	218-01-9	<5.0	5.0
Dibenz(a,h)anthracene:	53-70-3	<6.0	6.0
Fluoranthene:	206-44-0	<6.5	6.5
Pyrene:	129-00-0	<6.5	6.5
Fluorene:	86-73-7	<5.0	5.0
Phenanthrene:	85-01-8	<5.0	5.0
Indeno(1,2,3-cd)pyrene:	193-39-5	<5.0	5.0
Naphthalene:	91-20-3	<5.0	5.0

Surrogate:	% RC*
Nitrobenzene-d5	87

* Acceptable Recovery: 27-134 %

Dilution Factor: 1

Data Qualifiers: None

Mr. Justin King
Parsons Environment & Infrastructure, Inc.
100 W. Walnut St
Pasadena, CA, 91124

Lab Reference # PEI OCAQ1021
Project Name: LAUSD Basset Street
Project #:

Metals

Client Sample ID	Lab Sample Number	Date Received	Date Sampled	Matrix
Method Blank				Soil

MB ID	ANALYTE	EPA Method	Result	RL	Units	Date Extracted	Date Analyzed	Qual	DF
MBJH0107251	Cadmium	6010B	<0.50	0.50	mg/kg	01/07/25 14:00	01/08/25 10:59	--	1
MBJH0107251	Chromium	6010B	<0.50	0.50	mg/kg	01/07/25 14:00	01/08/25 10:59	--	1
MBJH0107251	Lead	6010B	<0.80	0.80	mg/kg	01/07/25 14:00	01/08/25 10:59	--	1
MBAU0109251	Mercury	7471A	<0.10	0.10	mg/kg	01/09/25 14:08	01/10/25 11:33	--	1
MBJH0107251	Nickel	6010B	<1.0	1.0	mg/kg	01/07/25 14:00	01/08/25 10:59	--	1

SB-1-0.0	OCAQ1021-01	1/6/2025 11:00	1/3/2025	Soil

ANALYTE	EPA Method	Result	RL	Units	Date Extracted	Date Analyzed	Qual	DF
Cadmium	6010B	1.0	0.50	mg/kg	01/07/25 14:00	01/08/25 11:09	--	1
Chromium	6010B	22	0.50	mg/kg	01/07/25 14:00	01/08/25 11:09	--	1
Lead	6010B	4.5	0.80	mg/kg	01/07/25 14:00	01/08/25 11:09	--	1
Mercury	7471A	<0.10	0.10	mg/kg	01/09/25 14:08	01/10/25 11:38	--	1
Nickel	6010B	19	1.0	mg/kg	01/07/25 14:00	01/08/25 11:09	--	1

SB-2-0.0	OCAQ1021-03	1/6/2025 11:00	1/3/2025	Soil

ANALYTE	EPA Method	Result	RL	Units	Date Extracted	Date Analyzed	Qual	DF
Cadmium	6010B	1.3	0.50	mg/kg	01/07/25 14:00	01/08/25 11:28	--	1
Chromium	6010B	21	0.50	mg/kg	01/07/25 14:00	01/08/25 11:28	--	1
Lead	6010B	11	0.80	mg/kg	01/07/25 14:00	01/08/25 11:28	--	1
Mercury	7471A	<0.10	0.10	mg/kg	01/09/25 14:08	01/10/25 11:48	--	1
Nickel	6010B	19	1.0	mg/kg	01/07/25 14:00	01/08/25 11:28	--	1

Mr. Justin King
Parsons Environment & Infrastructure, Inc.
100 W. Walnut St
Pasadena, CA, 91124

Lab Reference # PEI OCAQ1021
Project Name: LAUSD Basset Street
Project #:

Metals

Client Sample ID	Lab Sample Number	Date Received	Date Sampled	Matrix
SB-3-0.0	OCAQ1021-05	1/6/2025 11:00	1/3/2025	Soil

ANALYTE	EPA Method	Result	RL	Units	Date Extracted	Date Analyzed	Qual	DF
Cadmium	6010B	0.71	0.50	mg/kg	01/07/25 14:00	01/08/25 11:38	--	1
Chromium	6010B	15	0.50	mg/kg	01/07/25 14:00	01/08/25 11:38	--	1
Lead	6010B	4.0	0.80	mg/kg	01/07/25 14:00	01/08/25 11:38	--	1
Mercury	7471A	<0.10	0.10	mg/kg	01/09/25 14:08	01/10/25 11:53	--	1
Nickel	6010B	12	1.0	mg/kg	01/07/25 14:00	01/08/25 11:38	--	1

Client Sample ID	Lab Sample Number	Date Received	Date Sampled	Matrix
SB-3-1.0D	OCAQ1021-07	1/6/2025 11:00	1/3/2025	Soil

ANALYTE	EPA Method	Result	RL	Units	Date Extracted	Date Analyzed	Qual	DF
Cadmium	6010B	1.0	0.50	mg/kg	01/07/25 14:00	01/08/25 11:41	--	1
Chromium	6010B	20	0.50	mg/kg	01/07/25 14:00	01/08/25 11:41	--	1
Lead	6010B	7.2	0.80	mg/kg	01/07/25 14:00	01/08/25 11:41	--	1
Mercury	7471A	<0.10	0.10	mg/kg	01/09/25 14:08	01/10/25 11:55	--	1
Nickel	6010B	17	1.0	mg/kg	01/07/25 14:00	01/08/25 11:41	--	1

Client Sample ID	Lab Sample Number	Date Received	Date Sampled	Matrix
SB-4-0.0	OCAQ1021-08	1/6/2025 11:00	1/3/2025	Soil

ANALYTE	EPA Method	Result	RL	Units	Date Extracted	Date Analyzed	Qual	DF
Cadmium	6010B	0.98	0.50	mg/kg	01/07/25 14:00	01/08/25 11:44	--	1
Chromium	6010B	17	0.50	mg/kg	01/07/25 14:00	01/08/25 11:44	--	1
Lead	6010B	2.6	0.80	mg/kg	01/07/25 14:00	01/08/25 11:44	--	1
Mercury	7471A	<0.10	0.10	mg/kg	01/09/25 14:08	01/10/25 11:57	--	1
Nickel	6010B	13	1.0	mg/kg	01/07/25 14:00	01/08/25 11:44	--	1

Mr. Justin King
Parsons Environment & Infrastructure, Inc.
100 W. Walnut St
Pasadena, CA, 91124

Lab Reference # PEI OCAQ1021
Project Name: LAUSD Basset Street
Project #:

Metals

Client Sample ID	Lab Sample Number	Date Received	Date Sampled	Matrix
SB-5-0.0	OCAQ1021-10	1/6/2025 11:00	1/3/2025	Soil

ANALYTE	EPA Method	Result	RL	Units	Date Extracted	Date Analyzed	Qual	DF
Cadmium	6010B	0.85	0.50	mg/kg	01/07/25 14:00	01/08/25 11:47	--	1
Chromium	6010B	18	0.50	mg/kg	01/07/25 14:00	01/08/25 11:47	--	1
Lead	6010B	13	0.80	mg/kg	01/07/25 14:00	01/08/25 11:47	--	1
Mercury	7471A	<0.10	0.10	mg/kg	01/09/25 14:08	01/10/25 11:59	--	1
Nickel	6010B	15	1.0	mg/kg	01/07/25 14:00	01/08/25 11:47	--	1

Client Sample ID	Lab Sample Number	Date Received	Date Sampled	Matrix
SB-6-0.0	OCAQ1021-12	1/6/2025 11:00	1/3/2025	Soil

ANALYTE	EPA Method	Result	RL	Units	Date Extracted	Date Analyzed	Qual	DF
Cadmium	6010B	0.94	0.50	mg/kg	01/07/25 14:00	01/08/25 11:50	--	1
Chromium	6010B	20	0.50	mg/kg	01/07/25 14:00	01/08/25 11:50	--	1
Lead	6010B	3.5	0.80	mg/kg	01/07/25 14:00	01/08/25 11:50	--	1
Mercury	7471A	<0.10	0.10	mg/kg	01/09/25 14:08	01/10/25 12:01	--	1
Nickel	6010B	17	1.0	mg/kg	01/07/25 14:00	01/08/25 11:50	--	1

Client Sample ID	Lab Sample Number	Date Received	Date Sampled	Matrix
SB-7-0.0	OCAQ1021-14	1/6/2025 11:00	1/3/2025	Soil

ANALYTE	EPA Method	Result	RL	Units	Date Extracted	Date Analyzed	Qual	DF
Cadmium	6010B	1.2	0.50	mg/kg	01/07/25 14:00	01/08/25 11:53	--	1
Chromium	6010B	23	0.50	mg/kg	01/07/25 14:00	01/08/25 11:53	--	1
Lead	6010B	6.2	0.80	mg/kg	01/07/25 14:00	01/08/25 11:53	--	1
Mercury	7471A	<0.10	0.10	mg/kg	01/09/25 14:08	01/10/25 12:02	--	1
Nickel	6010B	20	1.0	mg/kg	01/07/25 14:00	01/08/25 11:53	--	1

Mr. Justin King
Parsons Environment & Infrastructure, Inc.
100 W. Walnut St
Pasadena, CA, 91124

Lab Reference # PEI OCAQ1021
Project Name: LAUSD Basset Street
Project #:

Metals

Client Sample ID	Lab Sample Number	Date Received	Date Sampled	Matrix
SB-8-0.0	OCAQ1021-16	1/6/2025 11:00	1/3/2025	Soil

ANALYTE	EPA Method	Result	RL	Units	Date Extracted	Date Analyzed	Qual	DF
Cadmium	6010B	0.73	0.50	mg/kg	01/07/25 14:00	01/08/25 11:56	--	1
Chromium	6010B	18	0.50	mg/kg	01/07/25 14:00	01/08/25 11:56	--	1
Lead	6010B	19	0.80	mg/kg	01/07/25 14:00	01/08/25 11:56	--	1
Mercury	7471A	<0.10	0.10	mg/kg	01/09/25 14:08	01/10/25 12:04	--	1
Nickel	6010B	15	1.0	mg/kg	01/07/25 14:00	01/08/25 11:56	--	1

Client Sample ID	Lab Sample Number	Date Received	Date Sampled	Matrix
SB-9-0.0	OCAQ1021-18	1/6/2025 11:00	1/3/2025	Soil

ANALYTE	EPA Method	Result	RL	Units	Date Extracted	Date Analyzed	Qual	DF
Cadmium	6010B	0.92	0.50	mg/kg	01/07/25 14:00	01/08/25 12:00	--	1
Chromium	6010B	22	0.50	mg/kg	01/07/25 14:00	01/08/25 12:00	--	1
Lead	6010B	3.5	0.80	mg/kg	01/07/25 14:00	01/08/25 12:00	--	1
Mercury	7471A	<0.10	0.10	mg/kg	01/09/25 14:08	01/10/25 12:06	--	1
Nickel	6010B	17	1.0	mg/kg	01/07/25 14:00	01/08/25 12:00	--	1

Client Sample ID	Lab Sample Number	Date Received	Date Sampled	Matrix
SB-9-0.0D	OCAQ1021-20	1/6/2025 11:00	1/3/2025	Soil

ANALYTE	EPA Method	Result	RL	Units	Date Extracted	Date Analyzed	Qual	DF
Cadmium	6010B	0.57	0.50	mg/kg	01/07/25 14:00	01/08/25 12:04	--	1
Chromium	6010B	14	0.50	mg/kg	01/07/25 14:00	01/08/25 12:04	--	1
Lead	6010B	2.4	0.80	mg/kg	01/07/25 14:00	01/08/25 12:04	--	1
Mercury	7471A	<0.10	0.10	mg/kg	01/09/25 14:08	01/10/25 12:07	--	1
Nickel	6010B	11	1.0	mg/kg	01/07/25 14:00	01/08/25 12:04	--	1

Mr. Justin King
Parsons Environment & Infrastructure, Inc.
100 W. Walnut St
Pasadena, CA, 91124

Lab Reference # PEI OCAQ1021
Project Name: LAUSD Basset Street
Project #:

Metals

Client Sample ID	Lab Sample Number	Date Received	Date Sampled	Matrix
SB-10-0.0	OCAQ1021-21	1/6/2025 11:00	1/3/2025	Soil

ANALYTE	EPA Method	Result	RL	Units	Date Extracted	Date Analyzed	Qual	DF
Cadmium	6010B	<0.50	0.50	mg/kg	01/07/25 14:00	01/08/25 12:07	--	1
Chromium	6010B	3.5	0.50	mg/kg	01/07/25 14:00	01/08/25 12:07	--	1
Lead	6010B	1.2	0.80	mg/kg	01/07/25 14:00	01/08/25 12:07	--	1
Mercury	7471A	<0.10	0.10	mg/kg	01/09/25 14:08	01/10/25 12:09	--	1
Nickel	6010B	2.0	1.0	mg/kg	01/07/25 14:00	01/08/25 12:07	--	1

SB-11-0.0	OCAQ1021-23	1/6/2025 11:00	1/3/2025	Soil

ANALYTE	EPA Method	Result	RL	Units	Date Extracted	Date Analyzed	Qual	DF
Cadmium	6010B	1.2	0.50	mg/kg	01/07/25 14:00	01/08/25 12:17	--	1
Chromium	6010B	24	0.50	mg/kg	01/07/25 14:00	01/08/25 12:17	--	1
Lead	6010B	12	0.80	mg/kg	01/07/25 14:00	01/08/25 12:17	--	1
Mercury	7471A	<0.10	0.10	mg/kg	01/09/25 14:08	01/10/25 12:14	--	1
Nickel	6010B	20	1.0	mg/kg	01/07/25 14:00	01/08/25 12:17	--	1

Method Blank	Soil

MB ID	ANALYTE	EPA Method	Result	RL	Units	Date Extracted	Date Analyzed	Qual	DF
MBJH0107251	Arsenic	6020	<1.0	1.0	mg/kg	01/07/25 14:00	01/08/25 14:14	--	1

SB-1-0.0	OCAQ1021-01	1/6/2025 11:00	1/3/2025	Soil

ANALYTE	EPA Method	Result	RL	Units	Date Extracted	Date Analyzed	Qual	DF
Arsenic	6020	2.9	1.0	mg/kg	01/07/25 14:00	01/08/25 14:21	--	1

Mr. Justin King
Parsons Environment & Infrastructure, Inc.
100 W. Walnut St
Pasadena, CA, 91124

Lab Reference # PEI OCAQ1021
Project Name: LAUSD Basset Street
Project #:

Metals

Client Sample ID	Lab Sample Number	Date Received		Date Sampled	Matrix
SB-2-0.0	OCAQ1021-03	1/6/2025	11:00	1/3/2025	Soil

ANALYTE	EPA Method	Result	RL	Units	Date Extracted	Date Analyzed	Qual	DF
Arsenic	6020	4.0	1.0	mg/kg	01/07/25 14:00	01/08/25 14:33	--	1

Client Sample ID	Lab Sample Number	Date Received		Date Sampled	Matrix
SB-3-0.0	OCAQ1021-05	1/6/2025	11:00	1/3/2025	Soil

ANALYTE	EPA Method	Result	RL	Units	Date Extracted	Date Analyzed	Qual	DF
Arsenic	6020	2.4	1.0	mg/kg	01/07/25 14:00	01/08/25 14:35	--	1

Client Sample ID	Lab Sample Number	Date Received		Date Sampled	Matrix
SB-3-1.0D	OCAQ1021-07	1/6/2025	11:00	1/3/2025	Soil

ANALYTE	EPA Method	Result	RL	Units	Date Extracted	Date Analyzed	Qual	DF
Arsenic	6020	2.1	1.0	mg/kg	01/07/25 14:00	01/08/25 14:43	--	1

Client Sample ID	Lab Sample Number	Date Received		Date Sampled	Matrix
SB-4-0.0	OCAQ1021-08	1/6/2025	11:00	1/3/2025	Soil

ANALYTE	EPA Method	Result	RL	Units	Date Extracted	Date Analyzed	Qual	DF
Arsenic	6020	2.3	1.0	mg/kg	01/07/25 14:00	01/08/25 14:46	--	1

Client Sample ID	Lab Sample Number	Date Received		Date Sampled	Matrix
SB-5-0.0	OCAQ1021-10	1/6/2025	11:00	1/3/2025	Soil

ANALYTE	EPA Method	Result	RL	Units	Date Extracted	Date Analyzed	Qual	DF
Arsenic	6020	2.7	1.0	mg/kg	01/07/25 14:00	01/08/25 14:48	--	1

Client Sample ID	Lab Sample Number	Date Received		Date Sampled	Matrix
SB-6-0.0	OCAQ1021-12	1/6/2025	11:00	1/3/2025	Soil

ANALYTE	EPA Method	Result	RL	Units	Date Extracted	Date Analyzed	Qual	DF
Arsenic	6020	3.7	1.0	mg/kg	01/07/25 14:00	01/08/25 14:50	--	1

Mr. Justin King
Parsons Environment & Infrastructure, Inc.
100 W. Walnut St
Pasadena, CA, 91124

Lab Reference # PEI OCAQ1021
Project Name: LAUSD Basset Street
Project #:

Metals

Client Sample ID	Lab Sample Number	Date Received		Date Sampled	Matrix
SB-7-0.0	OCAQ1021-14	1/6/2025	11:00	1/3/2025	Soil

ANALYTE	EPA Method	Result	RL	Units	Date Extracted	Date Analyzed	Qual	DF
Arsenic	6020	4.8	1.0	mg/kg	01/07/25 14:00	01/08/25 14:53	--	1

SB-8-0.0	OCAQ1021-16	1/6/2025	11:00	1/3/2025	Soil

ANALYTE	EPA Method	Result	RL	Units	Date Extracted	Date Analyzed	Qual	DF
Arsenic	6020	4.0	1.0	mg/kg	01/07/25 14:00	01/08/25 14:55	--	1

SB-9-0.0	OCAQ1021-18	1/6/2025	11:00	1/3/2025	Soil

ANALYTE	EPA Method	Result	RL	Units	Date Extracted	Date Analyzed	Qual	DF
Arsenic	6020	3.6	1.0	mg/kg	01/07/25 14:00	01/08/25 14:57	--	1

SB-9-0.0D	OCAQ1021-20	1/6/2025	11:00	1/3/2025	Soil

ANALYTE	EPA Method	Result	RL	Units	Date Extracted	Date Analyzed	Qual	DF
Arsenic	6020	2.4	1.0	mg/kg	01/07/25 14:00	01/08/25 15:00	--	1

SB-10-0.0	OCAQ1021-21	1/6/2025	11:00	1/3/2025	Soil

ANALYTE	EPA Method	Result	RL	Units	Date Extracted	Date Analyzed	Qual	DF
Arsenic	6020	<1.0	1.0	mg/kg	01/07/25 14:00	01/08/25 15:02	--	1

SB-11-0.0	OCAQ1021-23	1/6/2025	11:00	1/3/2025	Soil

ANALYTE	EPA Method	Result	RL	Units	Date Extracted	Date Analyzed	Qual	DF
Arsenic	6020	4.7	1.0	mg/kg	01/07/25 14:00	01/08/25 15:04	--	1

QA/QC Report
for
Organochlorine Pesticides (EPA 8081A)

Reporting Units: ppb

Matrix Spike (MS) / Matrix Spike Duplicate (MSD)

Date of Extraction: 1/7/2025 15:44
Date of Analysis: 1/10/2025 12:52
Dup Date of Analysis: 1/10/2025 13:07
Laboratory Sample #: OCAQ1021-01
MS/MSD Qualifiers: None
Reference #: PEI OCAQ1021

Analyte	R	Spike Conc.	MS	MSD	%MS	%MSD	RPD	ACP %MS	ACP RPD	Qual
Aldrin	0.00	20.0	12.0	11.4	60	57	5	17-130	25	--
alpha-BHC	0.00	20.0	11.6	11.2	58	56	4	22-130	23	--
beta-BHC	0.00	20.0	11.8	11.2	59	56	5	26-130	25	--
gamma-BHC (Lindane)	0.00	20.0	11.2	10.6	56	53	6	27-130	22	--
4,4'-DDD	0.00	20.0	12.5	11.8	63	59	6	37-130	27	--
4,4'-DDE	0.00	20.0	12.6	11.9	63	59	6	42-130	20	--
4,4'-DDT	0.00	20.0	12.4	11.7	62	58	6	43-130	23	--
delta-BHC	0.00	20.0	11.9	11.4	59	57	4	34-130	24	--
Dieldrin	0.00	20.0	12.0	11.2	60	56	7	29-130	21	--
Endosulfan I	0.00	20.0	12.0	11.2	60	56	7	29-130	25	--
Endosulfan II	0.00	20.0	12.0	11.2	60	56	7	29-130	26	--
Endosulfan sulfate	0.00	20.0	11.4	10.8	57	54	5	D-130	30	--
Endrin	0.00	20.0	13.0	12.2	65	61	6	34-130	27	--
Endrin Aldehyde	0.00	20.0	8.80	8.14	44	41	8	D-130	30	--
Endrin ketone	0.00	20.0	11.5	10.9	57	54	5	15-130	30	--
Heptachlor	0.00	20.0	12.2	11.7	61	58	4	21-130	25	--
Heptachlor epoxide	0.00	20.0	12.1	11.4	61	57	6	28-130	26	--
Methoxychlor	0.00	20.0	12.9	12.5	64	63	3	28-130	29	--

Surrogate Recoveries for Spike Samples

Surrogate (%RC)	MS	MSD	Qual	LCS	LCSD	Qual	ACP % RC
Decachlorobiphenyl	74	70	☐	78	77	☐	33-139

Laboratory Control Sample (LCS) / Laboratory Control Sample Duplicate (LCSD)

Date of Extraction: 1/7/2025 15:44
Date of Analysis: 1/10/2025 12:23
Dup Date of Analysis: 1/10/2025 12:38
Laboratory Sample #: VV0107251A
LCS/LCSD Qualifiers: None

Analyte	Spike Conc.	LCS	LCSD	%LCS	%LCSD	RPD	ACP %LCS	ACP RPD	Qual
Aldrin	20.0	11.8	12.5	59	63	6	10-130	30	--
alpha-BHC	20.0	11.6	12.5	58	63	7	16-130	31	--
beta-BHC	20.0	11.9	12.7	59	63	7	23-130	26	--
gamma-BHC (Lindane)	20.0	11.5	12.3	57	62	7	20-130	28	--
4,4'-DDD	20.0	12.4	13.2	62	66	6	50-130	20	--
4,4'-DDE	20.0	12.3	13.1	62	66	6	40-130	20	--

QA/QC Report
for
Organochlorine Pesticides (EPA 8081A)

Reporting Units: ppb

Analyte	Spike Conc.	LCS	LCSD	%LCS	%LCSD	RPD	ACP %LCS	ACP RPD	Qual
4,4'-DDT	20.0	12.5	13.2	63	66	5	47-130	20	--
delta-BHC	20.0	11.7	12.6	58	63	7	29-130	27	--
Dieldrin	20.0	11.9	12.7	59	63	7	33-130	24	--
Endosulfan I	20.0	12.0	12.8	60	64	6	25-130	29	--
Endosulfan II	20.0	11.6	12.9	58	64	11	36-130	27	--
Endosulfan sulfate	20.0	11.5	13.1	57	66	13	D-129	44	--
Endrin	20.0	12.9	13.7	64	69	6	34-130	21	--
Endrin Aldehyde	20.0	9.08	9.96	45	50	9	4-130	43	--
Endrin ketone	20.0	11.3	12.7	56	63	12	21-130	26	--
Heptachlor	20.0	12.1	12.9	61	64	6	13-130	33	--
Heptachlor epoxide	20.0	12.0	12.8	60	64	6	23-130	27	--
Methoxychlor	20.0	12.8	13.9	64	69	8	41-130	24	--

QA/QC Report
for
Polychlorinated Biphenyl's (EPA 8082)
Reporting units: ppb

Matrix Spike (MS) / Matrix Spike Duplicate (MSD)

Date of Extraction: 1/7/2025 15:44
Date of Analysis: 1/9/2025 11:07
Dup Date of Analysis: 1/9/2025 11:22
Laboratory Sample #: OCAQ1021-01
MS/MSD Qualifiers: None
Reference #: PEI OCAQ1021

Analyte	R	SPC CONC	MS	MSD	%MS	%MSD	RPD	ACP %MS	ACP RPD	Qual
PCB-1016	0.00	150	118	118	79	79	0	27-135	27	☐
PCB-1260	0.00	150	146	145	97	97	1	41-131	22	☐

Surrogate Recoveries for Spike Samples

Surrogate (%RC)	MS	MSD	Qual
Decachlorobiphenyl	97	96	☐

LCS	LCSD	Qual
101	103	☐

ACP % RC
33-139

Laboratory Control Sample

Date of Extraction: 1/7/2025 15:44
Date of Analysis: 1/9/2025 10:38
Dup Date of Analysis: 1/9/2025 10:52
Laboratory Sample #: VV0107251B
LCS Qualifiers: None

Analyte	SPC CONC	LCS	LCSD	%LCS	%LCSD	RPD	ACP %LCS	ACP RPD	Qual
PCB-1016	150	122	127	81	85	4	18-145	28	☐
PCB-1260	150	149	155	99	103	4	42-141	20	☐

QA/QC Report
for
Semi-Volatile Organic Compounds (8270C)
Reporting Units: ppb

Matrix Spike (MS) / Matrix Spike Duplicate (MSD)

Date of Extraction: 1/7/2025 14:40
Date of Analysis: 1/7/2025 18:18
Dup Date of Analysis: 1/7/2025 18:50
Laboratory Sample #: OCAQ1021-21
MS/MSD Qualifiers: None
Reference #: PEI OCAQ1021

Analyte	R	Spike Conc.	MS	MSD	%MS	%MSD	RPD	ACP %MS	ACP RPD	Qual
Acenaphthene	0.00	400	452	412	113	103	9	34-136	20	--
Acenaphthylene	0.00	400	510	472	127	118	8	31-141	20	--
Anthracene	0.00	400	430	411	108	103	5	31-143	20	--
Benz(a)anthracene	0.00	400	471	450	118	113	5	34-156	20	--
Benzo(a)pyrene	0.00	400	430	409	108	102	5	32-143	20	--
Benzo(b)fluoranthene	0.00	400	457	417	114	104	9	31-150	20	--
Benzo(g,h,i)perylene	0.00	400	415	373	104	93	11	14-147	22	--
Benzo(k)fluoranthene	0.00	400	490	445	123	111	10	34-143	21	--
Chrysene	0.00	400	470	422	117	105	11	35-141	20	--
Dibenz(a,h)anthracene	0.00	400	395	356	99	89	10	23-142	20	--
Fluoranthene	0.00	400	448	414	112	103	8	36-150	20	--
Fluorene	0.00	400	452	414	113	103	9	35-140	20	--
Indeno(1,2,3-cd)pyrene	0.00	400	408	370	102	93	10	24-141	20	--
Naphthalene	0.00	400	429	390	107	98	10	28-130	20	--
Phenanthrene	0.00	400	408	374	102	94	9	33-142	20	--
Pyrene	0.00	400	454	424	113	106	7	33-150	20	--

Surrogate Recoveries for Spike Samples

Surrogate (%RC)	MS	MSD	Qual	LCS	LCSD	Qual	ACP % RC
Nitrobenzene-d5	98	91	☐	90	96	☐	27-134

Laboratory Control Sample (LCS) / Laboratory Control Sample Duplicate (LCSD)

Date of Extraction: 1/7/2025 14:40
Date of Analysis: 1/7/2025 17:15
Dup Date of Analysis: 1/7/2025 17:46
Laboratory Sample #: GS0701251
LCS/LCSD Qualifiers: None

Analyte	Spike Conc.	LCS	LCSD	%LCS	%LCSD	RPD	ACP %LCS	ACP RPD	Qual
Acenaphthene	400	453	458	113	114	1	41-139	20	--
Acenaphthylene	400	516	517	129	129	0	41-141	20	--
Anthracene	400	440	445	110	111	1	38-141	20	--
Benz(a)anthracene	400	442	445	111	111	1	46-150	20	--

QA/QC Report
for
Semi-Volatile Organic Compounds (8270C)

Reporting Units: ppb

Analyte	Spike Conc.	LCS	LCSD	%LCS	%LCSD	RPD	ACP %LCS	ACP RPD	Qual
Benzo(a)pyrene	400	449	462	112	115	3	36-140	20	--
Benzo(b)fluoranthene	400	493	508	123	127	3	41-145	21	--
Benzo(g,h,i)perylene	400	445	468	111	117	5	21-149	27	--
Benzo(k)fluoranthene	400	533	566	133	141	6	41-142	22	--
Chrysene	400	473	480	118	120	1	41-142	20	--
Dibenz(a,h)anthracene	400	428	444	107	111	4	27-146	23	--
Fluoranthene	400	426	429	107	107	1	47-144	20	--
Fluorene	400	457	458	114	114	0	48-136	20	--
Indeno(1,2,3-cd)pyrene	400	438	456	110	114	4	27-147	24	--
Naphthalene	400	426	440	107	110	3	39-130	23	--
Phenanthrene	400	416	419	104	105	1	45-139	20	--
Pyrene	400	465	473	116	118	2	40-153	20	--

QA/QC Report
for
Metals

Reference #: PEI OCAQ1021 Reporting units: ppm

Matrix Spike (MS) / Matrix Spike Duplicate (MSD) **6010B/7471A**

Laboratory Sample #: OCAQ1021-01 **Date of Extraction:** 01/07/25 14:00

Analyte	MS Date of Analysis	MSD Date of Analysis	R1	SPC CONC	MS	MSD	% MS	% MSD	RPD	ACP %MS	ACP RPD	Qualifiers
Cadmium	01/08/25 11:12	01/08/25 11:15	1.00	20.0	18.5	18.5	88	88	0	75-125	20	--
Chromium	01/08/25 11:12	01/08/25 11:15	22.0	20.0	43.0	40.9	105	95	5	75-125	20	--
Lead	01/08/25 11:12	01/08/25 11:15	4.50	20.0	22.1	21.6	88	86	2	75-125	20	--
Nickel	01/08/25 11:12	01/08/25 11:15	19.0	20.0	36.9	35.8	90	84	3	75-125	20	--

Laboratory Control Spike (LCS) / Laboratory Control Spike Duplicate (LCSD) **6010B/7471A**

Laboratory Sample #: JH0107251 **Date of Extraction:** 01/07/25 14:00

Analyte	LCS Date of Analysis	LCSD Date of Analysis		SPC CONC	LCS	LCSD	% LCS	% LCSD	RPD	ACP %LCS	ACP RPD	Qualifiers
Cadmium	01/08/25 11:02	01/08/25 11:06	--	20.0	16.8	16.6	84	83	1	80-120	20	--
Chromium	01/08/25 11:02	01/08/25 11:06	--	20.0	18.5	18.5	93	93	0	80-120	20	--
Lead	01/08/25 11:02	01/08/25 11:06	--	20.0	18.3	18.4	91	92	1	80-120	20	--
Nickel	01/08/25 11:02	01/08/25 11:06	--	20.0	18.5	18.6	93	93	1	80-120	20	--

Matrix Spike (MS) / Matrix Spike Duplicate (MSD) **6010B/7471A**

Laboratory Sample #: OCAQ1021-01 **Date of Extraction:** 01/09/25 14:08

Analyte	MS Date of Analysis	MSD Date of Analysis	R1	SPC CONC	MS	MSD	% MS	% MSD	RPD	ACP %MS	ACP RPD	Qualifiers
Mercury	01/10/25 11:40	01/10/25 11:41	0.00	1.00	1.12	1.17	112	117	4	80-120	20	--

Laboratory Control Spike (LCS) / Laboratory Control Spike Duplicate (LCSD) **6010B/7471A**

Laboratory Sample #: AU0109251 **Date of Extraction:** 01/09/25 14:08

Analyte	LCS Date of Analysis	LCSD Date of Analysis		SPC CONC	LCS	LCSD	% LCS	% LCSD	RPD	ACP %LCS	ACP RPD	Qualifiers
Mercury	01/10/25 11:34	01/10/25 11:36	--	1.00	1.08	1.13	108	113	5	80-120	20	--

Matrix Spike (MS) / Matrix Spike Duplicate (MSD) **6020/7471A**

Laboratory Sample #: OCAQ1021-01 **Date of Extraction:** 01/07/25 14:00

Analyte	MS Date of Analysis	MSD Date of Analysis	R1	SPC CONC	MS	MSD	% MS	% MSD	RPD	ACP %MS	ACP RPD	Qualifiers
Arsenic	01/08/25 14:24	01/08/25 14:26	2.90	20.0	24.1	23.6	106	104	2	75-125	20	--

Laboratory Control Spike (LCS) / Laboratory Control Spike Duplicate (LCSD) **6020/7471A**

Laboratory Sample #: JH0107251 **Date of Extraction:** 01/07/25 14:00

Analyte	LCS Date of Analysis	LCSD Date of Analysis		SPC CONC	LCS	LCSD	% LCS	% LCSD	RPD	ACP %LCS	ACP RPD	Qualifiers
Arsenic	01/08/25 14:17	01/08/25 14:19	--	20.0	18.5	19.2	93	96	4	80-120	20	--

Data Qualifier Definitions

Qualifier

D1 = Sample required dilution due to matrix.

Definition of terms:

R	Result of unspiked laboratory sample used for matrix spike determination.
SP CONC (or Spike Conc.)	Spike concentration added to sample or blank
MS	Matrix Spike sample result
MSD	Matrix Spike Duplicate sample result
%MS	Percent recovery of MS: {(MS-R1) / SP CONC} x100
%MSD	Percent recovery of MSD: {(MSD-R1) / SP CONC} x 100
RPD (for MS/MSD)	Relative Percent Difference: {(MS-MSD) / (MS+MSD)} x 100 x 2
LCS	Laboratory Control Sample result
LCSD	Laboratory Control Sample Duplicate result
%LCS	Percent recovery of LCS: {(LCS) / SP CONC} x100
%LCSD	Percent recovery of LCSD: {(LCSD) / SP CONC} x 100
RPD (for LCS/LCSD)	Relative Percent Difference: {(LCS-LCSD) / (LCS+LCSD)} x 100 x 2
ACP %LCS	Acceptable percent recovery range for Laboratory Control Samples.
ACP %MS	Acceptable percent recovery range for Matrix Spike samples
ACP RPD	Acceptable Relative Percent Difference
D	Detectable, result must be greater than zero
Qual	A checked box indicates a data qualifier was utilized and/or required for this analyte see attached explanation.
ND	Analyte Not Detected

McCampbell Analytical, Inc.

"When Quality Counts"

Analytical Report

WorkOrder: 2501425

Report Created for: Orange Coast Analytical

3002 Dow Ave Ste 532
Tustin, CA 92780

Project Contact: Miriam Molina
Project P.O.: OCAQ1021
Project: samples received 1/9/25

Project Location:
Project Received: 01/09/2025

Analytical Report reviewed & approved for release on 01/16/2025 by:

Yen Cao
Project Manager

The report shall not be reproduced except in full, without the written approval of the laboratory. The analytical results relate only to the items tested. Results reported conform to the most current regulatory standards, where applicable, unless otherwise stated in a case narrative.

McCampbell Analytical, Inc.
"When Quality Counts"

1534 Willow Pass Road, Pittsburg, CA 94565-1701
Toll Free Telephone: (877) 252-9262 / Fax: (925) 252-9269
http://www.mccampbell.com / E-mail: main@mccampbell.com

Glossary of Terms & Qualifier Definitions

Client: Orange Coast Analytical **WorkOrder:** 2501425
Project: samples received 1/9/25

Glossary Abbreviation

%D	Serial Dilution Percent Difference
95% Interval	95% Confident Interval
CCV	Continuing Calibration Verification.
CCV REC (%)	% recovery of Continuing Calibration Verification.
CPT	Consumer Product Testing not NELAP Accredited
DF	Dilution Factor
DI WET	(DISTLC) Waste Extraction Test using DI water
DISS	Dissolved (direct analysis of 0.45 µm filtered and acidified water sample)
DLT	Dilution Test (Serial Dilution)
DUP	Duplicate
EDL	Estimated Detection Limit
ERS	External reference sample. Second source calibration verification.
ITEF	International Toxicity Equivalence Factor
LCS	Laboratory Control Sample
LCS2	Second LCS for the batch. Spike level is lower than that for the first LCS; applicable to method 1633.
LQL	Lowest Quantitation Level
MB	Method Blank
MB IS/SS % Rec	% Recovery of Internal Standard or Surrogate in Method Blank, if applicable
MB SS % Rec	% Recovery of Surrogate in Method Blank, if applicable
MDL	Method Detection Limit [1]
ML	Minimum Level of Quantitation
MS	Matrix Spike
MSD	Matrix Spike Duplicate
NA	Not Applicable
ND	Not detected at or above the indicated MDL or RL
NR	Data Not Reported due to matrix interference or insufficient sample amount.
PDS	Post Digestion Spike
PF	Prep Factor
RD	Relative Difference
RL	Reporting Limit [2]
RPD	Relative Percent Difference
RRT	Relative Retention Time
RSD	Relative Standard Deviation
SNR	Surrogate is diluted out of the calibration range

[1] MDL is the minimum measured concentration of a substance that can be reported with 99% confidence that the measured concentration is distinguishable from method blank results. Definition and Procedure for the Determination of the Method Detection Limit, Revision 2, 40CFR, Part 136, Appendix B, EPA 821-R-16-006, December 2016. Values are based upon our default extraction volume/amount and are subject to change.

[2] RL is the lowest level that can be reliably determined within specified limits of precision and accuracy during routine laboratory operating conditions. (The RL cannot be lower than the lowest calibration standard used in the initial calibration of the instrument and must be greater than the MDL.) Values are based upon our default extraction volume/amount and are subject to change.

McCampbell Analytical, Inc.
"When Quality Counts"

1534 Willow Pass Road, Pittsburg, CA 94565-1701
Toll Free Telephone: (877) 252-9262 / Fax: (925) 252-9269
http://www.mccampbell.com / E-mail: main@mccampbell.com

Glossary of Terms & Qualifier Definitions

Client: Orange Coast Analytical **WorkOrder:** 2501425
Project: samples received 1/9/25

SPK Val	Spike Value
SPKRef Val	Spike Reference Value
SPLP	Synthetic Precipitation Leachate Procedure
ST	Sorbent Tube
TCLP	Toxicity Characteristic Leachate Procedure
TEQ	Toxicity Equivalents
TNTC	“Too Numerous to Count;” greater than 250 colonies observed on the plate.
TZA	TimeZone Net Adjustment for sample collected outside of MAI's Coordinated Universal Time (UTC). (Adjustment for Daylight Saving is not accounted.)
WET (STLC)	Waste Extraction Test (Soluble Threshold Limit Concentration)

Analytical Qualifiers

J	Result is less than the RL/ML but greater than the MDL. The reported concentration is an estimated value.

Quality Control Qualifiers

F2	LCS/LCSD recovery and/or RPD/RSD is out of acceptance criteria.

McCampbell Analytical, Inc.
"When Quality Counts"

1534 Willow Pass Road, Pittsburg, CA 94565-1701
Toll Free Telephone: (877) 252-9262 / Fax: (925) 252-9269
http://www.mccampbell.com / E-mail: main@mccampbell.com

Analytical Report

Client:	Orange Coast Analytical	**WorkOrder:**	2501425
Date Received:	01/09/2025 10:14	**Extraction Method:**	SW3060A
Date Prepared:	01/13/2025	**Analytical Method:**	SW7199
Project:	samples received 1/9/25	**Unit:**	mg/Kg

Hexavalent chromium by Alkaline Digestion and IC Analysis

Client ID	Lab ID	Matrix	Date Collected	Instrument	Batch ID
SB-1-0.0	2501425-001A	Soil	01/03/2025 11:28	IC2 25011419.CHW	309339

Analytes	Result	MDL	RL	DF	Date Analyzed
Hexavalent chromium	**0.41**	0.12	0.20	1	01/14/2025 02:54

Analyst(s): ND

Client ID	Lab ID	Matrix	Date Collected	Instrument	Batch ID
SB-2-0.0	2501425-002A	Soil	01/03/2025 11:06	IC2 25011420.CHW	309339

Analytes	Result	MDL	RL	DF	Date Analyzed
Hexavalent chromium	**0.56**	0.12	0.20	1	01/14/2025 03:04

Analyst(s): ND

Client ID	Lab ID	Matrix	Date Collected	Instrument	Batch ID
SB-3-0.0	2501425-003A	Soil	01/03/2025 10:40	IC2 25011423.CHW	309339

Analytes	Result	MDL	RL	DF	Date Analyzed
Hexavalent chromium	**0.26**	0.12	0.20	1	01/14/2025 03:34

Analyst(s): ND

(Cont.)

CA ELAP 1644 • NELAP 4033ORELAP

McCampbell Analytical, Inc.
"When Quality Counts"

1534 Willow Pass Road, Pittsburg, CA 94565-1701
Toll Free Telephone: (877) 252-9262 / Fax: (925) 252-9269
http://www.mccampbell.com / E-mail: main@mccampbell.com

Analytical Report

Client:	Orange Coast Analytical	**WorkOrder:**	2501425
Date Received:	01/09/2025 10:14	**Extraction Method:**	SW3060A
Date Prepared:	01/13/2025	**Analytical Method:**	SW7199
Project:	samples received 1/9/25	**Unit:**	mg/Kg

Hexavalent chromium by Alkaline Digestion and IC Analysis

Client ID	Lab ID	Matrix	Date Collected	Instrument	Batch ID
SB-3-0.0D	2501425-004A	Soil	01/03/2025 10:45	IC2 25011424.CHW	309339

Analytes	Result	MDL	RL	DF	Date Analyzed
Hexavalent chromium	**0.36**	0.12	0.20	1	01/14/2025 03:44

Analyst(s): ND

Client ID	Lab ID	Matrix	Date Collected	Instrument	Batch ID
SB-4-0.0	2501425-005A	Soil	01/03/2025 10:17	IC2 25011425.CHW	309339

Analytes	Result	MDL	RL	DF	Date Analyzed
Hexavalent chromium	**0.27**	0.12	0.20	1	01/14/2025 03:53

Analyst(s): ND

Client ID	Lab ID	Matrix	Date Collected	Instrument	Batch ID
SB-5-0.0	2501425-006A	Soil	01/03/2025 09:16	IC2 25011339.CHW	309340

Analytes	Result	MDL	RL	DF	Date Analyzed
Hexavalent chromium	**0.23**	0.12	0.20	1	01/13/2025 22:18

Analyst(s): ND

(Cont.)

CA ELAP 1644 • NELAP 4033ORELAP

McCampbell Analytical, Inc.
"When Quality Counts"

1534 Willow Pass Road, Pittsburg, CA 94565-1701
Toll Free Telephone: (877) 252-9262 / Fax: (925) 252-9269
http://www.mccampbell.com / E-mail: main@mccampbell.com

Analytical Report

Client:	Orange Coast Analytical	**WorkOrder:**	2501425
Date Received:	01/09/2025 10:14	**Extraction Method:**	SW3060A
Date Prepared:	01/13/2025	**Analytical Method:**	SW7199
Project:	samples received 1/9/25	**Unit:**	mg/Kg

Hexavalent chromium by Alkaline Digestion and IC Analysis

Client ID	Lab ID	Matrix	Date Collected	Instrument	Batch ID
SB-6-0.0	2501425-007A	Soil	01/03/2025 09:20	IC2 25011340.CHW	309340

Analytes	Result	MDL	RL	DF	Date Analyzed
Hexavalent chromium	**0.32**	0.12	0.20	1	01/13/2025 22:28

Analyst(s): ND

Client ID	Lab ID	Matrix	Date Collected	Instrument	Batch ID
SB-7-0.0	2501425-008A	Soil	01/03/2025 09:55	IC2 25011341.CHW	309340

Analytes	Result	MDL	RL	DF	Date Analyzed
Hexavalent chromium	**0.32**	0.12	0.20	1	01/13/2025 22:37

Analyst(s): ND

Client ID	Lab ID	Matrix	Date Collected	Instrument	Batch ID
SB-8-0.0	2501425-009A	Soil	01/03/2025 08:00	IC2 25011342.CHW	309340

Analytes	Result	Qualifiers	MDL	RL	DF	Date Analyzed
Hexavalent chromium	**0.14**	J	0.12	0.20	1	01/13/2025 22:47

Analyst(s): ND

(Cont.)

CA ELAP 1644 • NELAP 4033ORELAP

McCampbell Analytical, Inc.
"When Quality Counts"

1534 Willow Pass Road, Pittsburg, CA 94565-1701
Toll Free Telephone: (877) 252-9262 / Fax: (925) 252-9269
http://www.mccampbell.com / E-mail: main@mccampbell.com

Analytical Report

Client:	Orange Coast Analytical	**WorkOrder:**	2501425
Date Received:	01/09/2025 10:14	**Extraction Method:**	SW3060A
Date Prepared:	01/13/2025	**Analytical Method:**	SW7199
Project:	samples received 1/9/25	**Unit:**	mg/Kg

Hexavalent chromium by Alkaline Digestion and IC Analysis

Client ID	Lab ID	Matrix	Date Collected	Instrument	Batch ID
SB-9-0.0	2501425-010A	Soil	01/03/2025 08:30	IC2 25011343.CHW	309340

Analytes	Result	Qualifiers	MDL	RL	DF	Date Analyzed
Hexavalent chromium	**0.16**	J	0.12	0.20	1	01/13/2025 22:57

Analyst(s): ND

Client ID	Lab ID	Matrix	Date Collected	Instrument	Batch ID
SB-9-0.0D	2501425-011A	Soil	01/03/2025 08:32	IC2 25011344.CHW	309340

Analytes	Result	MDL	RL	DF	Date Analyzed
Hexavalent chromium	ND	0.12	0.20	1	01/13/2025 23:07

Analyst(s): ND

Client ID	Lab ID	Matrix	Date Collected	Instrument	Batch ID
SB-10-0.0	2501425-012A	Soil	01/03/2025 09:12	IC2 25011345.CHW	309340

Analytes	Result	MDL	RL	DF	Date Analyzed
Hexavalent chromium	**0.20**	0.12	0.20	1	01/13/2025 23:17

Analyst(s): ND

(Cont.)

McCampbell Analytical, Inc.
"When Quality Counts"

1534 Willow Pass Road, Pittsburg, CA 94565-1701
Toll Free Telephone: (877) 252-9262 / Fax: (925) 252-9269
http://www.mccampbell.com / E-mail: main@mccampbell.com

Analytical Report

Client:	Orange Coast Analytical	**WorkOrder:**	2501425
Date Received:	01/09/2025 10:14	**Extraction Method:**	SW3060A
Date Prepared:	01/13/2025	**Analytical Method:**	SW7199
Project:	samples received 1/9/25	**Unit:**	mg/Kg

Hexavalent chromium by Alkaline Digestion and IC Analysis

Client ID	Lab ID	Matrix	Date Collected	Instrument	Batch ID
SB-11-0.0	2501425-013A	Soil	01/03/2025 11:55	IC2 25011346.CHW	309340

Analytes	Result	MDL	RL	DF	Date Analyzed
Hexavalent chromium	**0.45**	0.12	0.20	1	01/13/2025 23:27

Analyst(s): ND

CA ELAP 1644 • NELAP 4033ORELAP

McCampbell Analytical, Inc.
"When Quality Counts"

1534 Willow Pass Road, Pittsburg, CA 94565-1701
Toll Free Telephone: (877) 252-9262 / Fax: (925) 252-9269
http://www.mccampbell.com / E-mail: main@mccampbell.com

Quality Control Report

Client:	Orange Coast Analytical	**WorkOrder:**	2501425
Date Prepared:	01/13/2025	**BatchID:**	309339
Date Analyzed:	01/13/2025	**Extraction Method:**	SW3060A
Instrument:	IC2	**Analytical Method:**	SW7199
Matrix:	Soil	**Unit:**	mg/Kg
Project:	samples received 1/9/25	**Sample ID:**	MB/LCS/LCSD-309339

QC Summary Report for SW7199 (Hexavalent chromium)

Analyte	MB Result	MDL	RL			
Hexavalent chromium	ND	0.12	0.20	-	-	-

Analyte	LCS Result	LCSD Result	SPK Val	LCS %REC	LCSD %REC	LCS/LCSD Limits	RPD	RPD Limit
Hexavalent chromium	4.5	4.3	4	114	108	70-130	5.51	10

(Cont.)

McCampbell Analytical, Inc.
"When Quality Counts"

1534 Willow Pass Road, Pittsburg, CA 94565-1701
Toll Free Telephone: (877) 252-9262 / Fax: (925) 252-9269
http://www.mccampbell.com / E-mail: main@mccampbell.com

Quality Control Report

Client:	Orange Coast Analytical	**WorkOrder:**	2501425
Date Prepared:	01/13/2025	**BatchID:**	309340
Date Analyzed:	01/13/2025 - 01/14/2025	**Extraction Method:**	SW3060A
Instrument:	IC2	**Analytical Method:**	SW7199
Matrix:	Soil	**Unit:**	mg/Kg
Project:	samples received 1/9/25	**Sample ID:**	MB/LCS/LCSD-309340

QC Summary Report for SW7199 (Hexavalent chromium)

Analyte	MB Result	MDL	RL			
Hexavalent chromium	ND	0.12	0.20	-	-	-

Analyte	LCS Result	LCSD Result	SPK Val	LCS %REC	LCSD %REC	LCS/LCSD Limits	RPD	RPD Limit
Hexavalent chromium	4.4	3.7	4	110	92	70-130	17.4,F2	10

McCampbell Analytical, Inc.
1534 Willow Pass Rd
Pittsburg, CA 94565-1701
(925) 252-9262

CHAIN-OF-CUSTODY RECORD

WorkOrder: 2501425 **ClientCode: OCAT**

☐ WaterTrax ☐ CLIP ☐ EDF ☐ EQuIS ☐ Dry-Weight ☑ Email ☐ HardCopy ☐ ThirdParty ☑ J-flag
☐ Detection Summary ☐ Excel

Report to:
Miriam Molina
Orange Coast Analytical
3002 Dow Ave Ste 532
Tustin, CA 92780
714-832-0064 FAX: 714-832-0067

Email: Miriam.Molina@alliancetg.com
cc/3rd Party: ocalab@sbcglobal.net;
PO: OCAQ1021
Project: samples received 1/9/25

Bill to:
Accounts Payable
Alliance Technical Group
Alliance Technical Group, LLC
Decatur, AL 35601
ap@alliancetg.com

Requested TAT: **5 days;**

Date Received: **01/09/2025**
Date Logged: **01/09/2025**

Lab ID	ClientSampID	Matrix	Collection Date	Hold	Requested Tests (See legend below) 1	2	3	4	5	6	7	8	9	10	11	12
2501425-001	SB-1-0.0	Soil	1/3/2025 11:28	☐	A	A										
2501425-002	SB-2-0.0	Soil	1/3/2025 11:06	☐	A	A										
2501425-003	SB-3-0.0	Soil	1/3/2025 10:40	☐	A	A										
2501425-004	SB-3-0.0D	Soil	1/3/2025 10:45	☐	A	A										
2501425-005	SB-4-0.0	Soil	1/3/2025 10:17	☐	A	A										
2501425-006	SB-5-0.0	Soil	1/3/2025 09:16	☐	A	A										
2501425-007	SB-6-0.0	Soil	1/3/2025 09:20	☐	A	A										
2501425-008	SB-7-0.0	Soil	1/3/2025 09:55	☐	A	A										
2501425-009	SB-8-0.0	Soil	1/3/2025 08:00	☐	A	A										
2501425-010	SB-9-0.0	Soil	1/3/2025 08:30	☐	A	A										
2501425-011	SB-9-0.0D	Soil	1/3/2025 08:32	☐	A	A										
2501425-012	SB-10-0.0	Soil	1/3/2025 09:12	☐	A	A										
2501425-013	SB-11-0.0	Soil	1/3/2025 11:55	☐	A	A										

Test Legend:

1	7199_TTLC_LL_S	2	PRDisposal Fee	3		4	
5		6		7		8	
9		10		11		12	

Project Manager: Jennifer Lagerbom

Prepared by: Adrianna Cardoza

Comments:

NOTE: Soil samples are discarded 60 days after receipt unless other arrangements are made (Water samples are 30 days).
Hazardous samples will be returned to client or disposed of at client expense.

McCampbell Analytical, Inc.
"When Quality Counts"

1534 Willow Pass Road, Pittsburg, CA 94565-1701
Toll Free Telephone: (877) 252-9262 / Fax: (925) 252-9269
http://www.mccampbell.com / E-mail: main@mccampbell.com

WORK ORDER SUMMARY

Client Name: ORANGE COAST ANALYTICAL
Client Contact: Miriam Molina
Contact's Email: Miriam.Molina@alliancetg.com

Project: samples received 1/9/25
Comments

Work Order: 2501425
QC Level: LEVEL 2
Date Logged: 1/9/2025

☐ WaterTrax ☐ CLIP ☐ EDF ☐ Excel ☐ EQuIS ☑ Email ☐ HardCopy ☐ ThirdParty ☑ J-flag

LabID	ClientSampID	Matrix	Test Name	Cont./ Comp.	Bottle & Preservative	U**	Head Space	Dry-Weight	Collection Date & Time	TAT	Test Due Date	Sediment Content	Hold	Sub Out
001A	SB-1-0.0	Soil	SW7199 (Hexavalent chromium, Low-Level)	1	4OZ GJ, Unpres	☐	☐	☐	1/3/2025 11:28	5 days	1/16/2025		☐	☐
002A	SB-2-0.0	Soil	SW7199 (Hexavalent chromium, Low-Level)	1	4OZ GJ, Unpres	☐	☐	☐	1/3/2025 11:06	5 days	1/16/2025		☐	☐
003A	SB-3-0.0	Soil	SW7199 (Hexavalent chromium, Low-Level)	1	4OZ GJ, Unpres	☐	☐	☐	1/3/2025 10:40	5 days	1/16/2025		☐	☐
004A	SB-3-0.0D	Soil	SW7199 (Hexavalent chromium, Low-Level)	1	4OZ GJ, Unpres	☐	☐	☐	1/3/2025 10:45	5 days	1/16/2025		☐	☐
005A	SB-4-0.0	Soil	SW7199 (Hexavalent chromium, Low-Level)	1	4OZ GJ, Unpres	☐	☐	☐	1/3/2025 10:17	5 days	1/16/2025		☐	☐
006A	SB-5-0.0	Soil	SW7199 (Hexavalent chromium, Low-Level)	1	4OZ GJ, Unpres	☐	☐	☐	1/3/2025 9:16	5 days	1/16/2025		☐	☐
007A	SB-6-0.0	Soil	SW7199 (Hexavalent chromium, Low-Level)	1	4OZ GJ, Unpres	☐	☐	☐	1/3/2025 9:20	5 days	1/16/2025		☐	☐
008A	SB-7-0.0	Soil	SW7199 (Hexavalent chromium, Low-Level)	1	4OZ GJ, Unpres	☐	☐	☐	1/3/2025 9:55	5 days	1/16/2025		☐	☐
009A	SB-8-0.0	Soil	SW7199 (Hexavalent chromium, Low-Level)	1	4OZ GJ, Unpres	☐	☐	☐	1/3/2025 8:00	5 days	1/16/2025		☐	☐

NOTES: * STLC and TCLP extractions require 2 days to complete; therefore, all TATs begin after the extraction is completed (i.e., One-day TAT yields results in 3 days from sample submission).

- ISM prep requires 5 to 10 days to complete; therefore, all TATs begin after the extraction is completed (i.e., One-day TAT yields results in 6 to 11 days from sample submission). Due date listed on WO summary will not accurately reflect the time needed for sample preparation.

- Organic extracts are held for 40 days before disposal; Inorganic extract are held for 30 days.

- MAI assumes that all material present in the provided sampling container is considered part of the sample - MAI does not exclude any material from the sample prior to sample preparation unless requested in writing by the client.

U = An unpreserved container was received for a method that suggests a preservation in order to extend hold time for analysis.**

Cont./Comp. = Containers /Composites

McCampbell Analytical, Inc.
"When Quality Counts"

1534 Willow Pass Road, Pittsburg, CA 94565-1701
Toll Free Telephone: (877) 252-9262 / Fax: (925) 252-9269
http://www.mccampbell.com / E-mail: main@mccampbell.com

WORK ORDER SUMMARY

Client Name: ORANGE COAST ANALYTICAL
Client Contact: Miriam Molina
Contact's Email: Miriam.Molina@alliancetg.com

Project: samples received 1/9/25
Comments

Work Order: 2501425
QC Level: LEVEL 2
Date Logged: 1/9/2025

☐ WaterTrax ☐ CLIP ☐ EDF ☐ Excel ☐ EQuIS ☑ Email ☐ HardCopy ☐ ThirdParty ☑ J-flag

LabID	ClientSampID	Matrix	Test Name	Cont./ Comp.	Bottle & Preservative	U**	Head Space	Dry-Weight	Collection Date & Time	TAT	Test Due Date	Sediment Content	Hold	Sub Out
010A	SB-9-0.0	Soil	SW7199 (Hexavalent chromium, Low-Level)	1	4OZ GJ, Unpres	☐	☐	☐	1/3/2025 8:30	5 days	1/16/2025		☐	☐
011A	SB-9-0.0D	Soil	SW7199 (Hexavalent chromium, Low-Level)	1	4OZ GJ, Unpres	☐	☐	☐	1/3/2025 8:32	5 days	1/16/2025		☐	☐
012A	SB-10-0.0	Soil	SW7199 (Hexavalent chromium, Low-Level)	1	4OZ GJ, Unpres	☐	☐	☐	1/3/2025 9:12	5 days	1/16/2025		☐	☐
013A	SB-11-0.0	Soil	SW7199 (Hexavalent chromium, Low-Level)	1	4OZ GJ, Unpres	☐	☐	☐	1/3/2025 11:55	5 days	1/16/2025		☐	☐

NOTES: * STLC and TCLP extractions require 2 days to complete; therefore, all TATs begin after the extraction is completed (i.e., One-day TAT yields results in 3 days from sample submission).

- ISM prep requires 5 to 10 days to complete; therefore, all TATs begin after the extraction is completed (i.e., One-day TAT yields results in 6 to 11 days from sample submission). Due date listed on WO summary will not accurately reflect the time needed for sample preparation.

- Organic extracts are held for 40 days before disposal; Inorganic extract are held for 30 days.

- MAI assumes that all material present in the provided sampling container is considered part of the sample - MAI does not exclude any material from the sample prior to sample preparation unless requested in writing by the client.

U = An unpreserved container was received for a method that suggests a preservation in order to extend hold time for analysis.**

Cont./Comp. = Containers /Composites

General COC

MAI Work Order # 2501425

McCAMPBELL ANALYTICAL, INC.

1534 Willow Pass Rd. Pittsburg, Ca. 94565-1701
Telephone: (877) 252-9262 / Fax: (925) 252-9269
www.mccampbell.com main@mccampbell.com

CHAIN OF CUSTODY RECORD

Turn Around Time:	1 Day Rush		2 Day Rush		3 Day Rush		STD	●	Quote #				
J-Flag / MDL		ESL		Cleanup Approved					Bottle Order #				
Delivery Format:	PDF		GeoTracker EDF		EDD		Write On (DW)		EQuIS				

Report To: Miriam Molina Bill To: AP@alliancetg.com

Company: Orange Coast Analytical, Inc

Email: miriam.molina@alliancetg.com

Alt Email: ocalab@sbcglobal.net Tele: 7148320064

Project Name: Project #:

Project Location: PO # OCAQ1021

Sampler Signature:

Analysis Requested

SAMPLE ID Location / Field Point	Sampling Date	Sampling Time	#Containers	Matrix	Preservative	BTEX & TPH as Gas (8021/ 8015) MTBE	TPH as Diesel (8015) + Motor Oil Without Silica Gel	TPH as Diesel (8015) + Motor Oil With Silica Gel	Total Oil & Grease (1664 / 9071) Without Silica Gel	Total Petroleum Hydrocarbons - Oil & Grease (1664 / 9071) With Silica Gel	Total Petroleum Hydrocarbons (418.1) With Silica Gel	EPA 505/ 608 / 8081 (Cl Pesticides)	EPA 608 / 8082 PCB's ; Aroclors only	EPA 524.2 / 624 / 8260 (VOCs)	EPA 525.2 / 625 / 8270 (SVOCs)	EPA 8270 SIM / 8310 (PAHs / PNAs)	CAM 17 Metals (200.8 / 6020)*	Metals (200.8 / 6020)	Baylands Requirements	Lab to filter sample for dissolved metals analysis	CR(VI) (7199)			
SB-1-0.0	1/3/25	1128	1	S	NONE																●			
SB-2-0.0	1/3/25	1106	1	S	NONE																●			
SB-3-0.0	1/3/25	1040	1	S	NONE																●			
SB-3-1.0D	1/3/25	1045	1	S	NONE																●			
SB-4-0.0	1/3/25	1017	1	S	NONE																●			
SB-5-0.0	1/3/25	0916	1	S	NONE																●			
SB-6-0.0	1/3/25	0920	1	S	NONE																●			
SB-7-0.0	1/3/25	0955	1	S	NONE																●			
SB-8-0.0	1/3/25	0800	1	S	NONE																●			
SB-9-0.0	1/3/25	0830	1	S	NONE																●			

MAI clients MUST disclose any dangerous chemicals known to be present in their submitted samples in concentrations that may cause immediate harm or serious future health endangerment as a result of brief, gloved, open air, sample handling by MAI staff. Non-disclosure incurs an immediate $250 surcharge and the client is subject to full legal liability for harm suffered. Thank you for your understanding and for allowing us to work safely.

* If metals are requested for water samples and the water type (Matrix) is not specified on the chain of custody, MAI will default to metals by E200.8.

Please provide an adequate volume of sample. If the volume is not sufficient for a MS/MSD a LCS/LCSD will be prepared in its place and noted in the report.

Comments / Instructions

Relinquished By / Company Name	Date	Time	Received By / Company Name	Date	Time
Marmo	1/8/25	15:29	[signature]	1.9.25	10:14

Matrix Code: DW=Drinking Water, GW=Ground Water, WW=Waste Water, SW=Seawater, S=Soil, SL=Sludge, A=Air, WP=Wipe, O=Other

Preservative Code: 1=4°C 2=HCl 3=H_2SO_4 4=HNO_3 5=NaOH 6=ZnOAc/NaOH 7=None

Temp 4.6 °C Initials

ua I230

Page 1 of 2

MAI Work Order # _____

McCAMPBELL ANALYTICAL, INC.

1534 Willow Pass Rd. Pittsburg, Ca. 94565-1701
Telephone: (877) 252-9262 / Fax: (925) 252-9269
www.mccampbell.com main@mccampbell.com

CHAIN OF CUSTODY RECORD

Turn Around Time:	1 Day Rush		2 Day Rush		3 Day Rush		STD	●	Quote #						
J-Flag / MDL		ESL		Cleanup Approved					Bottle Order #						
Delivery Format:	PDF		GeoTracker EDF		EDD		Write On (DW)		EQuIS						

Report To: Miriam Molina Bill To: AP@alliancetg.com

Company: Orange Coast Analytical, Inc

Email: miriam.molina@alliancetg.com

Alt Email: ocalab@sbcglobal.net Tele: 7148320064

Project Name: Project #:

Project Location: PO # OCAQ1021

Sampler Signature:

Analysis Requested

SAMPLE ID Location / Field Point	Sampling Date	Sampling Time	#Containers	Matrix	Preservative	BTEX & TPH as Gas (8021/ 8015) MTBE	TPH as Diesel (8015) + Motor Oil Without Silica Gel	TPH as Diesel (8015) + Motor Oil With Silica Gel	Total Oil & Grease (1664 / 9071) Without Silica Gel	Total Petroleum Hydrocarbons - Oil & Grease (1664 / 9071) With Silica Gel	Total Petroleum Hydrocarbons (418.1) With Silica Gel	EPA 505/ 608 / 8081 (Cl Pesticides)	EPA 608 / 8082 PCB's ; Aroclors only	EPA 524.2 / 624 / 8260 (VOCs)	EPA 525.2 / 625 / 8270 (SVOCs)	EPA 8270 SIM / 8310 (PAHs / PNAs)	CAM 17 Metals (200.8 / 6020)*	Metals (200.8 / 6020)	Baylands Requirements	Lab to filter sample for dissolved metals analysis	CR(VI) (7199)			
SB-9-0.0D	1/3/25	0832	1	S	NONE																●			
SB-10-0.0	1/3/25	0912	1	S	NONE																●			
SB-11-0.0	1/3/25	1155	1	S	NONE																●			

MAI clients MUST disclose any dangerous chemicals known to be present in their submitted samples in concentrations that may cause immediate harm or serious future health endangerment as a result of brief, gloved, open air, sample handling by MAI staff. Non-disclosure incurs an immediate $250 surcharge and the client is subject to full legal liability for harm suffered. Thank you for your understanding and for allowing us to work safely.

* If metals are requested for water samples and the water type (Matrix) is not specified on the chain of custody, MAI will default to metals by E200.8.

Please provide an adequate volume of sample. If the volume is not sufficient for a MS/MSD a LCS/LCSD will be prepared in its place and noted in the report.

Comments / Instructions

Relinquished By / Company Name	Date	Time	Received By / Company Name	Date	Time
				1.9.25	10:14

Matrix Code: DW=Drinking Water, GW=Ground Water, WW=Waste Water, SW=Seawater, S=Soil, SL=Sludge, A=Air, WP=Wipe, O=Other

Preservative Code: 1=4°C 2=HCl 3=H_2SO_4 4=HNO_3 5=NaOH 6=ZnOAc/NaOH 7=None

Temp _____ °C Initials _____

Page 2 of 2

McCampbell Analytical, Inc.
"When Quality Counts"

1534 Willow Pass Road, Pittsburg, CA 94565-1701
Toll Free Telephone: (877) 252-9262 / Fax: (925) 252-9269
http://www.mccampbell.com / E-mail: main@mccampbell.com

Sample Receipt Checklist

Client Name:	Orange Coast Analytical	Date and Time Received:	1/9/2025 10:14
Project:	samples received 1/9/25	Date Logged:	1/9/2025
		Received by:	Adrianna Cardoza
WorkOrder №:	2501425 Matrix: Soil	Logged by:	Adrianna Cardoza
Carrier:	Golden State Overnight		

Chain of Custody (COC) Information

Chain of custody present?	Yes ☑	No ☐	
Chain of custody signed when relinquished and received?	Yes ☑	No ☐	
Chain of custody agrees with sample labels?	Yes ☑	No ☐	
Sample IDs noted by Client on COC?	Yes ☑	No ☐	
Date and Time of collection noted by Client on COC?	Yes ☑	No ☐	
Sampler's name noted on COC?	Yes ☑	No ☐	
COC agrees with Quote?	Yes ☐	No ☐	NA ☑

Sample Receipt Information

Custody seals intact on shipping container/cooler?	Yes ☑	No ☐	NA ☐
Custody seals intact on sample bottles?	Yes ☑	No ☐	NA ☐
Shipping container/cooler in good condition?	Yes ☑	No ☐	
Samples in proper containers/bottles?	Yes ☑	No ☐	
Sample containers intact?	Yes ☑	No ☐	
Sufficient sample volume for indicated test?	Yes ☑	No ☐	

Sample Preservation and Hold Time (HT) Information

All samples received within holding time?	Yes ☑	No ☐	NA ☐
Samples Received on Ice?	Yes ☑	No ☐	
	(Ice Type: WET ICE)		
Sample/Temp Blank temperature		Temp: 4°C	NA ☐
ZHS conditional analyses: VOA meets zero headspace requirement (VOCs, TPHg/BTEX, RSK)?	Yes ☐	No ☐	NA ☑
Sample labels checked for correct preservation?	Yes ☑	No ☐	
pH acceptable upon receipt (Metal: <2)?	Yes ☐	No ☐	NA ☑

UCMR Samples:

pH tested and acceptable upon receipt (200.7: ≤2; 533: 6 - 8; 537.1: 6 - 8)?	Yes ☐	No ☐	NA ☑
Free Chlorine tested and acceptable upon receipt (<0.1mg/L) [not applicable to 200.7]?	Yes ☐	No ☐	NA ☑

Comments:

LA Testing
5431 Industrial Drive, Huntington Beach, CA 92649
Phone/Fax: (714) 828-4999 / (714) 828-4944
http://www.LATesting.com hblab@latesting.com

LA Testing Order:	332500358
CustomerID:	32ORAN77
CustomerPO:	OCAQ1021
ProjectID:	

Attn: **Miriam Molina**
Alliance Technical Group LLC
3002 Dow Avenue
Suite 532
Tustin, CA 92780

Phone:	(714) 832-0064
Fax:	(714) 832-0067
Received:	1/9/2025 10:45 AM
Analysis Date:	1/15/2025
Collected:	1/3/2025

Test Report: Qualitative Asbestos Analysis of Soils via AHERA Method 40CFR 763 Subpart E Appendix E supplemented with EPA 600/R-93/116 using Polarized Light Microscopy

Sample	Description	Appearance	Result	Notes
SB-1-0.0 *332500358-0001*		Brown Non-Fibrous Homogeneous	**None Detected**	Soil is a problem matrix. Other analytical options are recommended such as EPA 600 PLM/TEM with milling prep
SB-2-0.0 *332500358-0002*		Brown Non-Fibrous Homogeneous	**None Detected**	Soil is a problem matrix. Other analytical options are recommended such as EPA 600 PLM/TEM with milling prep
SB-3-0.0 *332500358-0003*		Brown Non-Fibrous Homogeneous	**None Detected**	Soil is a problem matrix. Other analytical options are recommended such as EPA 600 PLM/TEM with milling prep
SB-3-1.0D *332500358-0004*		Brown Non-Fibrous Homogeneous	**None Detected**	Soil is a problem matrix. Other analytical options are recommended such as EPA 600 PLM/TEM with milling prep
SB-4-0.0 *332500358-0005*		Brown Non-Fibrous Homogeneous	**None Detected**	Soil is a problem matrix. Other analytical options are recommended such as EPA 600 PLM/TEM with milling prep
SB-5-0.0 *332500358-0006*		Brown Non-Fibrous Homogeneous	**None Detected**	Soil is a problem matrix. Other analytical options are recommended such as EPA 600 PLM/TEM with milling prep
SB-6-0.0 *332500358-0007*		Brown Non-Fibrous Homogeneous	**None Detected**	Soil is a problem matrix. Other analytical options are recommended such as EPA 600 PLM/TEM with milling prep
SB-7-0.0 *332500358-0008*		Brown Non-Fibrous Homogeneous	**None Detected**	Soil is a problem matrix. Other analytical options are recommended such as EPA 600 PLM/TEM with milling prep

Analyst(s)

Kaylin Luciani (6)
Thanh Nguyen (7)

Michael Chapman

Michael Chapman, Laboratory Manager
or other approved signatory

LA Testing maintains liability limited to cost of analysis. Interpretation and use of test results are the responsibility of the client. This report relates only to the samples reported above, and may not be reproduced, except in full, without written approval by LA Testing. LA Testing bears no responsibility for sample collection activities or analytical method limitations. The report reflects the samples as received. Results are generated from the field sampling data (sampling volumes and areas, locations, etc.) provided by the client on the Chain of Custody. Samples are within quality control criteria and met method specifications unless otherwise noted. This method is designed for relatively homogenous bulk building materials not soil. There is a distinct chance for false negatives. LA Testing recommends other, more specialized methods for these types of samples.

Samples analyzed by LA Testing Huntington Beach, CA

Initial report from 01/15/2025 12:20:19

LA Testing
5431 Industrial Drive, Huntington Beach, CA 92649
Phone/Fax: (714) 828-4999 / (714) 828-4944
http://www.LATesting.com hblab@latesting.com

LA Testing Order:	332500358
CustomerID:	32ORAN77
CustomerPO:	OCAQ1021
ProjectID:	

Attn: **Miriam Molina**
Alliance Technical Group LLC
3002 Dow Avenue
Suite 532
Tustin, CA 92780

Phone:	(714) 832-0064
Fax:	(714) 832-0067
Received:	1/9/2025 10:45 AM
Analysis Date:	1/15/2025
Collected:	1/3/2025

Test Report: Qualitative Asbestos Analysis of Soils via AHERA Method 40CFR 763 Subpart E Appendix E supplemented with EPA 600/R-93/116 using Polarized Light Microscopy

Sample	Description	Appearance	Result	Notes
SB-8-0.0 *332500358-0009*		Brown/Gray/Black Non-Fibrous Heterogeneous	**None Detected**	Soil is a problem matrix. Other analytical options are recommended such as EPA 600 PLM/TEM with milling prep
SB-9-0.0 *332500358-0010*		Brown Non-Fibrous Homogeneous	**None Detected**	Soil is a problem matrix. Other analytical options are recommended such as EPA 600 PLM/TEM with milling prep
SB-9-.0.D *332500358-0011*		Brown Non-Fibrous Homogeneous	**None Detected**	Soil is a problem matrix. Other analytical options are recommended such as EPA 600 PLM/TEM with milling prep
SB-10-0.0 *332500358-0012*		Gray/Tan/Black Non-Fibrous Homogeneous	**None Detected**	Soil is a problem matrix. Other analytical options are recommended such as EPA 600 PLM/TEM with milling prep
SB-11-0.0 *332500358-0013*		Brown Non-Fibrous Homogeneous	**None Detected**	Soil is a problem matrix. Other analytical options are recommended such as EPA 600 PLM/TEM with milling prep

Analyst(s)

Kaylin Luciani (6)
Thanh Nguyen (7)

Michael Chapman

Michael Chapman, Laboratory Manager
or other approved signatory

LA Testing maintains liability limited to cost of analysis. Interpretation and use of test results are the responsibility of the client. This report relates only to the samples reported above, and may not be reproduced, except in full, without written approval by LA Testing. LA Testing bears no responsibility for sample collection activities or analytical method limitations. The report reflects the samples as received. Results are generated from the field sampling data (sampling volumes and areas, locations, etc.) provided by the client on the Chain of Custody. Samples are within quality control criteria and met method specifications unless otherwise noted. This method is designed for relatively homogenous bulk building materials not soil. There is a distinct chance for false negatives. LA Testing recommends other, more specialized methods for these types of samples.
Samples analyzed by LA Testing Huntington Beach, CA

Initial report from 01/15/2025 12:20:19

THIS IS THE LAST PAGE OF THE REPORT.

OrderID: 332500358

Asbestos Chain of Custody

LA Testing Order Number *(lab use only)*: #332500358

PHONE:
FAX:

Company Name: Orange Coast Analytical, Inc.	LA Testing Customer ID:
Street: 3002 Dow Ave. #532	City: Tustin / State or Province: CA
Zip/Postal Code: 92780 / Country: USA	Telephone #: 7148320064 / Fax #:
Report To (Name): Miriam Molina	Please Provide Results via: ☐ Fax ☒ Email
email Address: ccelab@stargalnet / miriam.molina@alliancetg.com/ap@alliancetg.com	Purchase Order Number: OCAQ1021
Client Project ID:	LA Testing Project ID *(internal use only)*:
State or Province Collected: CA	CT only ☐ Commercial/Taxable ☐ Residential/Tax Exempt

LAT Bill to: ☒ Same ☐ Different - *If bill to is different note instructions in comment. Third party billing requires written authorization.*

Turnaround Time (TAT) Options Please Check

☐ 3 Hr[1] | ☐ 4-4.5Hr[1] AHERA Only | ☐ 6 Hr[1] | ☐ 24 Hr | ☐ 32 Hr[2] | ☐ 48 Hr | ☐ 72 Hr | ☐ 96 Hr | ☒ 1 Week | ☐ 2 Week

[1]Premium Service Charge applies for 3 Hour TEM AHERA or EPA Level II TAT – you will be asked to sign an authorization form. TEM Air 3-6 Hour, please call ahead to schedule
[2] 32 Hour TAT available for select tests only; samples must be submitted by 11:30 am.

PCM - Air
- ☐ NIOSH 7400
- ☐ w/ OSHA 8hr. TWA

PLM - Bulk (reporting limit)
- ☒ PLM EPA 600/R-93/116 (<1%)
- ☐ PLM EPA NOB (<1%)

Point Count
- ☐ 400 (<0.25%) ☐ 1000 (<0.1%)

Point Count w/Gravimetric
- ☐ 400 (<0.25%) ☐ 1000 (<0.1%)
- ☐ NYS 198.1 (friable - NY)
- ☐ NYS 198.6 NOB (non-friable-NY)
- ☐ NYS 198.8 SOF-V
- ☐ NIOSH 9002 (<1%)

TEM – Air[1]
- ☐ AHERA 40 CFR, Part 763
- ☐ NIOSH 7402
- ☐ EPA Level II
- ☐ ISO 10312

TEM - Bulk
- ☐ TEM EPA NOB
- ☐ NYS NOB 198.4 (non-friable-NY)
- ☐ TEM EPA 600/R-93/116 with milling prep (<0.1%)*

TEM – Water: EPA 100.2
- Fibers >10µm ☐ Waste ☐ Drinking
- All Fiber Sizes ☐ Waste ☐ Drinking

TEM- Settled Dust
- ☐ Microvac - ASTM D 5755
- ☐ Wipe - ASTM D6480
- ☐ Carpet Sonication (EPA 600/J-93/167)

Soil – Rock – Vermiculite (reporting limit)
- ☐ PLM EPA 600/R-93/116 with milling prep (<0.25%)
- ☐ TEM EPA 600/R-93/116 with milling prep (<0.1%)*
- ☐ TEM Qualitative via Filtration Prep
- ☐ TEM Qualitative via Drop Mount Prep
- ☐ Cincinnati Method EPA 600/R-04/004 – PLM/TEM

**Lower reporting limits avalaible on request*

Other test (please specify):

PLM Qualitative, See History

☐ **Stop At First Positive** *(clearly identify homogenous areas below)* | Filter Pore Size (Air Samples): ☐ 0.8µm ☐ 0.45µm

Sampler's Name: | Sampler's Signature:

Sample #	Sample Description/Location	Volume, Area or Homogenous Area	Date/Time Sampled
	SB-1-0.0		1/3/25 1128
	SB-2-0.0		1/3/25 1106
	SB-3-0.0		1/3/25 1040
	SB-3-1.0D		1/3/25 1045
	SB-4-0.0		1/3/25 1017

Client Sample # (s): | Total # of Samples:

Relinquished by (Client): Marine | Date: 1/8/2025 | Time: 1:24PM

Received by (Lab): Jonathan Santore (C) | Date: 1/9/25 | Time: 10:45am

Comments/Special Instructions:

Send invoice to ap@alliancetg.com

Controlled Document – COC-01 Asbestos LA Testing R4

LA Testing's Laboratory Terms and Conditions are incorporated into this chain of custody by reference in their entirety. Submission of samples to LA Testing Inc. constitutes acceptance and acknowledgment of all terms and conditions.

Asbestos Chain of Custody

LA Testing Order Number *(Lab Use Only)*:

#332500358

PHONE:
FAX:

Additional Pages of the Chain of Custody are only necessary if needed for additional sample information

Sample #	Sample Description	Volume/Area (Air) HA # (Bulk)	Date/Time Sampled
	SB-5-0.0		1/3/25 0916
	SB-6-0.0		1/3/25/ 0920
	SB-7-0.0		1/3/25 0955
	SB-8-0.0		1/3/25 0800
	SB-9-0.0		1/3/25 0830
	SB-9-0.0D		1/3/25 0832
	SB-10-0.0		1/3/25 0912
	SB-11-0.0		1/3/25 1155

*Comments/Special Instructions:

Controlled Document -- COC-04 Asbestos LA Testing R4

LA Testing's Laboratory Terms and Conditions are incorporated into this chain of custody by reference in their entirety. Submission of samples to LA Testing Inc. constitutes acceptance and acknowledgment of all terms and conditions.

OCAQ1021

Analysis Request & Chain of Custody Record

ORANGE COAST ANALYTICAL, INC.
An Alliance Technical Group Company
www.ocalab.com

3002 Dow Avenue, Suite 532
Tustin, CA 92780
CA Phone: (714) 832-0064

4620 East Elwood Street, Suite 4
Phoenix, AZ 85040
AZ Phone: (480) 736-0960

Lab Job No.: _____ Page: 1 of 2

CUSTOMER INFORMATION		PROJECT INFORMATION	
Company:	Parsons	Project Name:	LAUSD Basset Street
Send Report To:	Justin King	Project Number:	
Email:	Justin.King@parsons.com	PO #:	
Address:	100 W Walnut St Pasadena, CA 91124	Address (City / State):	15756 Basset St, Van Nuys, CA
		EDD Required:	
Phone:	310-809-5793 Fax:	Sampled By:	Alex Gonalez

ANALYSIS REQUEST / PRESERVATION

REQUESTED TURN-AROUND-TIME: Standard: X; 3 Day: ____; 2 Day: ____; 1 Day: ____

	Customer Sample IDs	No. of Containers	Sample Date	Sample Time	Sample Matrix	Container Type	Arsenic (6020)	CR VI (7199)	Asbestos (PLM)	OCPs (8081A)	PCBs (8082)	PAHs (8270 SIM)	Cd, Pb, Cr, Ni, Hg + Mercury (6010B/7470A)				REMARKS / INSTRUCTIONS
1	SB-1-0.0	1	1/3/25	1128	SS	Glass	X	X	X	X	X	X	X				
2	SB-1-1.0	1	1/3/25	1130	SS	Glass											Hold
3	SB-2-0.0	1	1/3/25	1106	SS	Glass	X	X	X	X	X	X	X				
4	SB-2-1.0	1	1/3/25	1108	SS	Glass											Hold
5	SB-3-0.0	1	1/3/25	1040	SS	Glass	X	X	X	X	X	X	X				
6	SB-3-1.0	1	1/3/25	1042	SS	Glass											
7	SB-3-1.0D	1	1/3/25	1045	SS	Glass	X	X	X	X	X	X	X				Hold
8	SB-4-0.0	1	1/3/25	1017	SS	Glass	X	X	X	X	X	X	X				
9	SB-4-1.0	1	1/3/25	1019	SS	Glass											Hold
10	SB-5-0.0	1	1/3/25	0916	SS	Glass	X	X	X	X	X	X	X				
11	SB-5-1.0	1	1/3/25	0918	SS	Glass											Hold
12	SB-6-0.0	1	1/3/25	0920	SS	Glass	X	X	X	X	X	X	X				
13	SB-6-1.0	1	1/3/25	0922	SS	Glass											Hold
14	SB-7-0.0	1	1/3/25	0955	SS	Glass	X	X	X	X	X	X	X				
15	SB-7-1.0	1	1/3/25	0957	SS	Glass											Hold

No. of Samples: 15 Method of Shipment:

Preservative: 1 = Ice 2 = HCl 3 = HNO_3 4 = H_2SO_4 5 = NaOH 6 = Other

Relinquished By:	Date: 1-6-25 Time: 1100	Received By:	Date: Time:
Company: Parsons		Company:	
Relinquished By:	Date: Time:	Received By:	Date: Time:
Company:		Company:	
Relinquished By:	Date: Time:	Received For OCA By:	Date: 1-6-25 Time: 11:00
Company:		Company: OCA	

Sample Matrix:
GW - Groundwater
WW - Wastewater
SW - Stormwater
DW - Drinking Water
AQ - Aqueous
SS - Soil / Solid
OT - Other

Sample Integrity: On Ice: Yes / No
Therm. ID: 2 Observed Temp.: ____ °C
Correction Factor: ____ °C
Intact: Yes / No Temperature: ____ °C

By signing above, client acknowledges responsibility for payment of all services requested on this chain of custody form and any additional services provided in support of this project. Payment is due within 30 days of invoice date unless otherwise agreed upon, in writing, by Orange Coast Analytical, Inc. All samples remain the property of the client. A disposal fee may be imposed if client fails to pickup samples upon completion of all analyses.

cooler 1 = 0°C cooler 2 = 1°C cooler 3 = 4°C

Analysis Request & Chain of Custody Record

ORANGE COAST ANALYTICAL, INC.
An Alliance Technical Group Company
3002 Dow Avenue, Suite 532
Tustin, CA 92780
CA Phone: (714) 832-0064

www.ocalab.com
4620 East Elwood Street, Suite 4
Phoenix, AZ 85040
AZ Phone: (480) 736-0960

Lab Job No.: OCAQ1021 Page: 2 of 2

CUSTOMER INFORMATION		PROJECT INFORMATION	
Company:	Parsons	Project Name:	LAUSD Basset Street
Send Report To:	Justin King	Project Number:	
Email:	Justin.King@parsons.com	PO #:	
Address:	100 W Walnut St Pasadena, CA 91124	Address (City / State):	15756 Basset St, Van Nuys, CA
		EDD Required:	
Phone:	310-809-5793 Fax:	Sampled By:	Alex Gonzalez

ANALYSIS REQUEST / PRESERVATION

REQUESTED TURN-AROUND-TIME: Standard: X; 3 Day: ; 2 Day: ; 1 Day:

	Customer Sample IDs	No. of Containers	Sample Date	Sample Time	Sample Matrix	Container Type	Arsenic (6020)	CR VI (7199)	Asbestos (PLM)	OCPs (8081A)	PCBs (8082)	PAHs (8270 SIM)	Cd, Pb, Cr, Ni, Hg + Mercury (6010B/7470A)				REMARKS / INSTRUCTIONS
16	SB-8-0.0	1	1/3/25	0800	SS	Glass	X	X	X	X	X	X	X				
17	SB-8-1.0	1	1/3/25	0805	SS	Glass											Hold
18	SB-9-0.0	1	1/3/25	0830	SS	Glass	X	X	X	X	X	X	X				
19	SB-9-1.0	1	1/3/25	0835	SS	Glass											Hold
20	SB-9-0.0D	1	1/3/25	0832	SS	Glass	X	X	X	X	X	X	X				
21	SB-10-0.0	1	1/3/25	0912	SS	Glass	X	X	X	X	X	X	X				
22	SB-10-1.0	1	1/3/25	0914	SS	Glass											Hold
23	SB-11-0.0	1	1/3/25	1155	SS	Glass	X	X	X	X	X	X	X				
24	SB-11-1.0	1	1/3/25	1157	SS	Glass											Hold

No. of Samples: 9 Method of Shipment:

Preservative: 1 = Ice 2 = HCl 3 = HNO_3 4 = H_2SO_4 5 = NaOH 6 = Other

Relinquished By:	Date: 1-6-25 Time: 1100	Received By:	Date: Time:
Company: Parsons		Company:	
Relinquished By:	Date: Time:	Received By:	Date: Time:
Company:		Company:	
Relinquished By:	Date: Time:	Received For OCA By:	Date: 1-6-25 Time: 11:00
Company:		Company: OCA	

Sample Matrix: GW - Groundwater; WW - Wastewater; SW - Stormwater; DW - Drinking Water; AQ - Aqueous; SS - Soil / Solid; OT - Other

Sample Integrity: On Ice: Yes / No; Therm. ID: 2; Observed Temp.: ____ °C; Correction Factor: ____ °C; Intact: Yes / No; Temperature: ____ °C

By signing above, client acknowledges responsibility for payment of all services requested on this chain of custody form and any additional services provided in support of this project. Payment is due within 30 days of invoice date unless otherwise agreed upon, in writing, by Orange Coast Analytical, Inc. All samples remain the property of the client. A disposal fee may be imposed if client fails to pickup samples upon completion of all analyses.

Cooler 1 = 0°C cooler 2 = 1°C cooler 3 = 4°C

Sample Receipt Report

Laboratory Reference PEI OCAQ1021 Logged in by AV

Received:	01/06/25 11:00	Company Name:	Parsons Environment & Infrastructure,
Method of Shipment:	Lab Pick-Up	Project Manager:	Mr. Justin King
Shipping Container:	Cooler	Project Name:	LAUSD Basset Street
# Shipping Containers:	1	Project #:	

Sample Quantity
24 Soil

Chain of Custody	Complete ☑	Incomplete ☐	None ☐
Samples On Ice	Yes, Wet ☑	Yes, Blue ☐	No ☐
Observed Temp. (°C):	Thermometer ID:	Adjusted Temp.:	
Shipping Intact	Yes ☑	N/A ☐	No ☐
Shipping Custody Seals Intact	Yes ☐	N/A ☑	No ☐
Samples Intact	Yes ☑		No ☐
Sample Custody Seals Intact	Yes ☐	N/A ☑	No ☐
Custody Seals Signed & Dated	Yes ☐	N/A ☑	No ☐
Proper Test Containers	Yes ☑		No ☐
Proper Test Preservations	Yes ☑		No ☐
Samples Within Hold Times	Yes ☑		No ☐
VOAs Have Zero Headspace	Yes ☐	N/A ☑	No ☐
Sample Labels	Complete ☑	Incomplete ☐	None ☐
Sample Information Matches COC	Yes ☑	N/A ☐	No ☐

Notes

cooler 1= 0°C
cooler 2 =1°C
cooler 3 = 4°C
IR#2

Client Notified _____ By _____ On _____